KOHLER®

Roughing-In

K-6356
AVATAR™
KITCHEN SINK FAUCET

Product Information

Applicable product:	
Kitchen sink faucet with handspray	K-6356
Front lever handle is ADA compliant.	**ADA**

Installation Notes

Install this product according to the installation guide.

Lower flow aerator options are available - please refer to the Kohler Price Book.

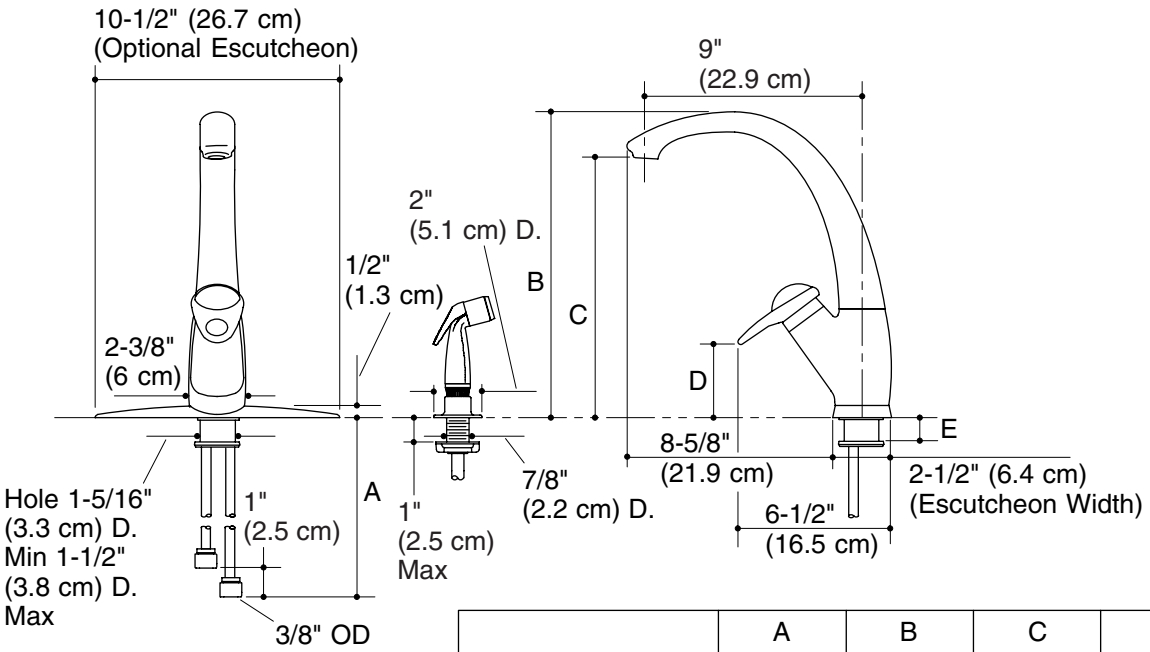

	A	B	C	D	E
With escutcheon	11-1/8" (28.3 cm)	13" (33 cm)	10-7/8" (27.6 cm)	3-1/8" (7.9 cm)	2-5/8" (6.7 cm)
Without escutcheon	11-5/8" (29.5 cm)	12-1/2" (31.8 cm)	10-3/8" (26.4 cm)	2-5/8" (6.7 cm)	3-1/8" (7.9 cm)