KOHLER®

Roughing-In

K-2220
VINTAGE™
COUNTERTOP LAVATORY

Product Information

ADA compliant			
Mexico products have an **M** after the first sequence of numbers (such as K-12345 **M**)			
Fixture*:		basin area	water depth
Lavatory		21″ (53.3 cm) x 12″ (30.5 cm)	4-7/8″ (12.4 cm)
Outlet	1-3/4″ D. (4.4 cm)		
* Approximate measurements for comparison only.			

Included Components:	
Adjustable linkage	40372
Cutout template	110359-7

Installation Notes

Install this product according to the installation guide.

4-5/8″ (11.7 cm) minimum faucet spout length needed to reach over rim into basin.

NOTICE: Countertop manufacturer or cutter **must** use the cutout template provided with the product, or a current one provided by Kohler Co. (call 1-800-4-KOHLER). Kohler Co. is not responsible for cutout errors when the incorrect cutout template is used.

Fixture dimensions are nominal and conform to tolerances in ASME Standard A112.19.2.

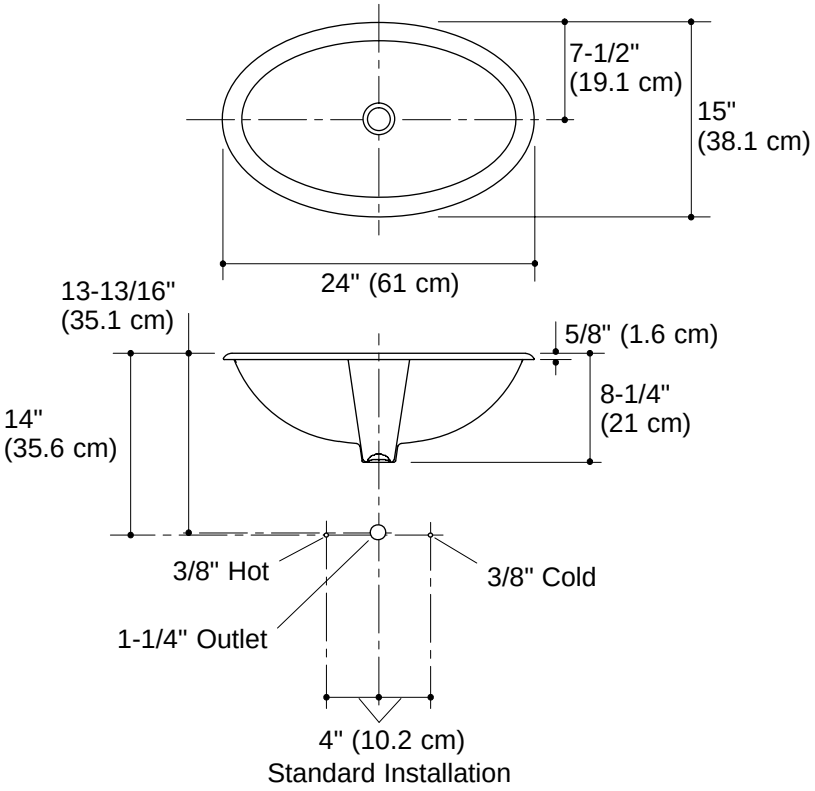

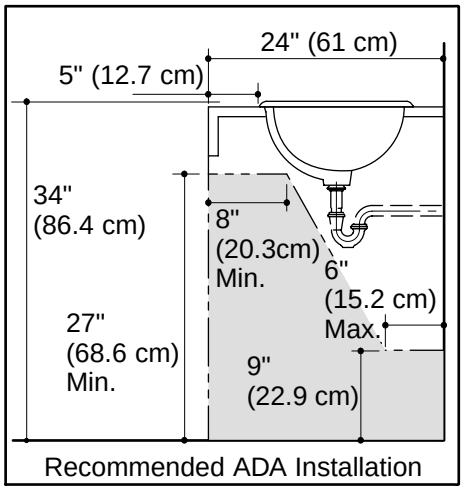

Recommended ADA Installation