KOHLER®

Roughing-In

K-4886
MEMOIRS®
VERTICAL SPRAY BIDET

Product Information

Applicable product:	
4-hole vertical spray bidet	K-4886

Fixture:	
Configuration	Faucet deck
Drain hole	1-3/4″ (4.4 cm) D.
Faucet holes	1-3/8″ (3.5 cm) D.
Pop-up rod hole	1-1/8″ (2.9 cm) D.
Spray hole	3/4″ (1.9 cm) D.
Diverter	1-5/16″ (3.3 cm) D.

Included components:	
Floor screws and cap bolts	1017124

Recommended accessories:	
Finial® Traditional or Finial Fundamentals faucet **OR**	K-316
Memoirs® faucet **OR**	K-470
Finial Art faucet **OR**	K-616
Stillness® faucet **OR**	K-960-4
IV Georges Brass® faucet **OR**	K-6814
Taboret® faucet **OR**	K-8247
Fairfax® faucet **OR**	K-12286-4
Purist® faucet **OR**	K-14431
Coralais® faucet **OR**	K-15286
Revival® faucet	K-16132
P-Trap	K-9018

Installation Notes

Install this product according to the installation guide.

Fixture dimensions are nominal and conform to tolerances in ASME Standard A112.19.2.

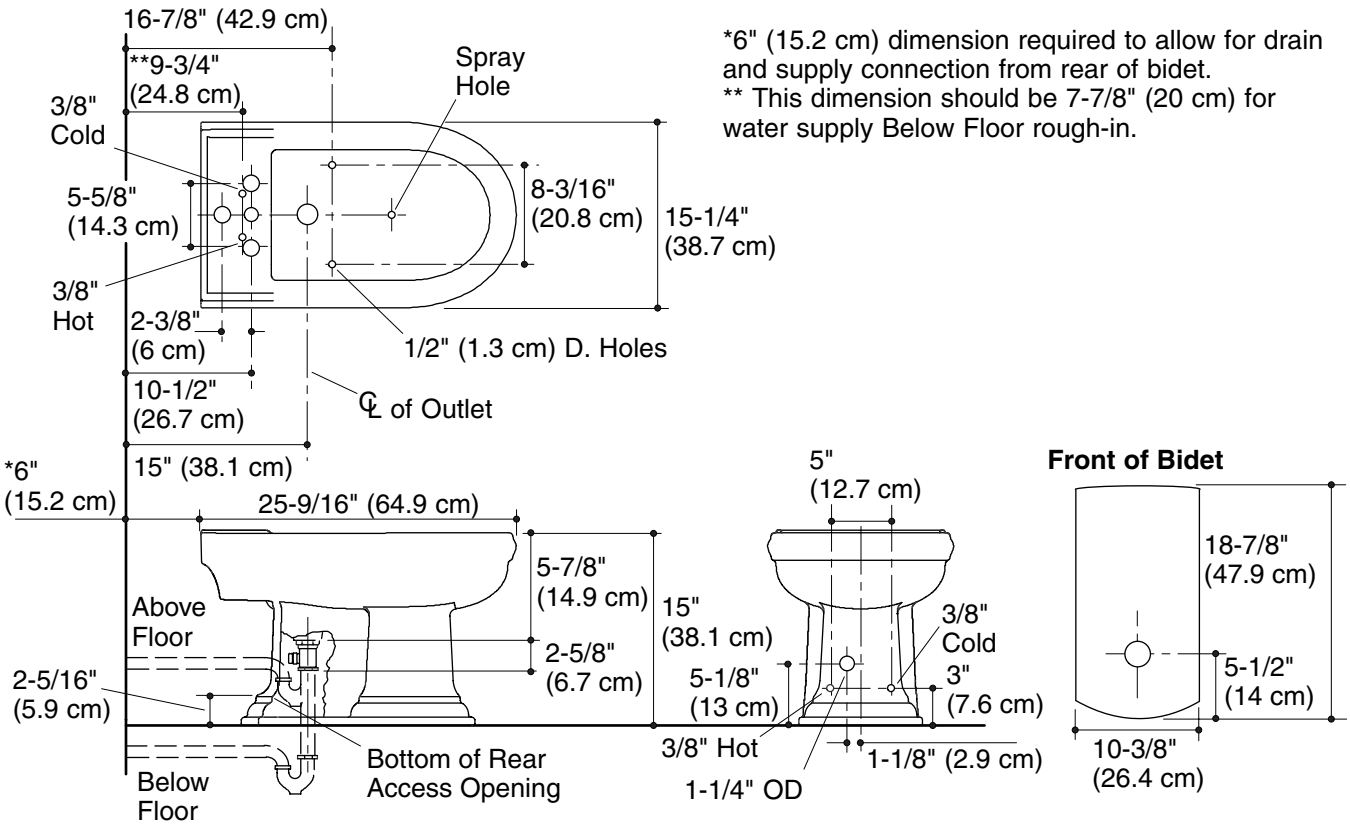

*6" (15.2 cm) dimension required to allow for drain and supply connection from rear of bidet.
** This dimension should be 7-7/8" (20 cm) for water supply Below Floor rough-in.