KOHLER®

Features

- *3 year warranty*
- *Steam generators can be installed up to 25' (7.6 m) away from steam bath area*

STEAM GENERATOR
K-1734-NA

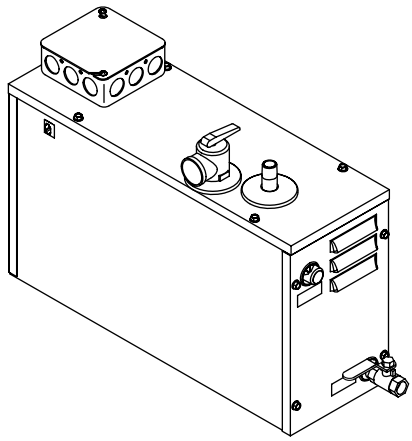

Codes/Standards Applicable

Specified model meets or exceeds the following:

- *UL 499*
- *CSA C22.2 No. 88*

Colors/Finishes

- NA: None applicable

Accessories:

- CP: Polished Chrome
- PB: Polished Brass
- Other: Refer to Price Book for additional colors/finishes

Specified Model

Model	Description	Colors/Finishes
K-1734-NA	Steam generator, 11 kW fast response	❑ NA

Required Accessories: *Choose either Option 1 or Option 2 below.*				
Option 1:				
K-1647-PC	Steam control kit, power clean	❑ CP	❑ PB	❑ Other_____
Option 2:				
K-1737	Steam adaptor kit and steam head **AND**	❑ CP	❑ PB	❑ Other_____
K-694	Landscape digital interface **OR**			❑ Other_____
K-695	Portrait digital interface			❑ Other_____

Optional Accessories: *Only available for use with Option 2 above.*				
K-657	Landscape auxiliary digital interface			❑ Other_____
K-658	Portrait auxiliary digital interface			❑ Other_____

Product Specification:

The 11 kW steam generator shall have a three-year warranty. Product shall be installed up to 25' (7.6 m) away from the steam bath area. Steam generator shall be Kohler Model K-1734-NA.

USA: 1-800-4-KOHLER
Canada: 1-800-964-5590
kohler.com

Technical Information

Water and drain requirements:	
Water supply	3/8″ copper line, 3/8″ NPT female thread
Steam line	1/2″ copper line, 1/2″ NPT female thread
Pressure relief valve	3/4″ NPT female thread, valve supplied
Drain line	3/8″ copper line, 3/8″ NPT female thread, ball valve supplied
Generator:	
Weight	19-1/2 lbs (8.8 kg)
Electrical rating	240 V, 50/60 Hz, 75 A

Required Electrical Service

Dedicated circuit required:	
Generator	11 kW, 240 V, 50/60 Hz, 75 A

Installation Notes

Install this product according to the installation guide.

Factory sized: L x H x W = cubic feet. Choose the appropriate model. For every foot of ceiling height over 8 ft (2.4 m), use the next larger steam unit. Always round your measurements up. Wall material is irrelevant.

For this steam generator, do not exceed the maximum volume rating:

Steam generator model	Power rating	Maximum volume rating
K-1734-NA	11 kW	317 cu ft (9 cu m)

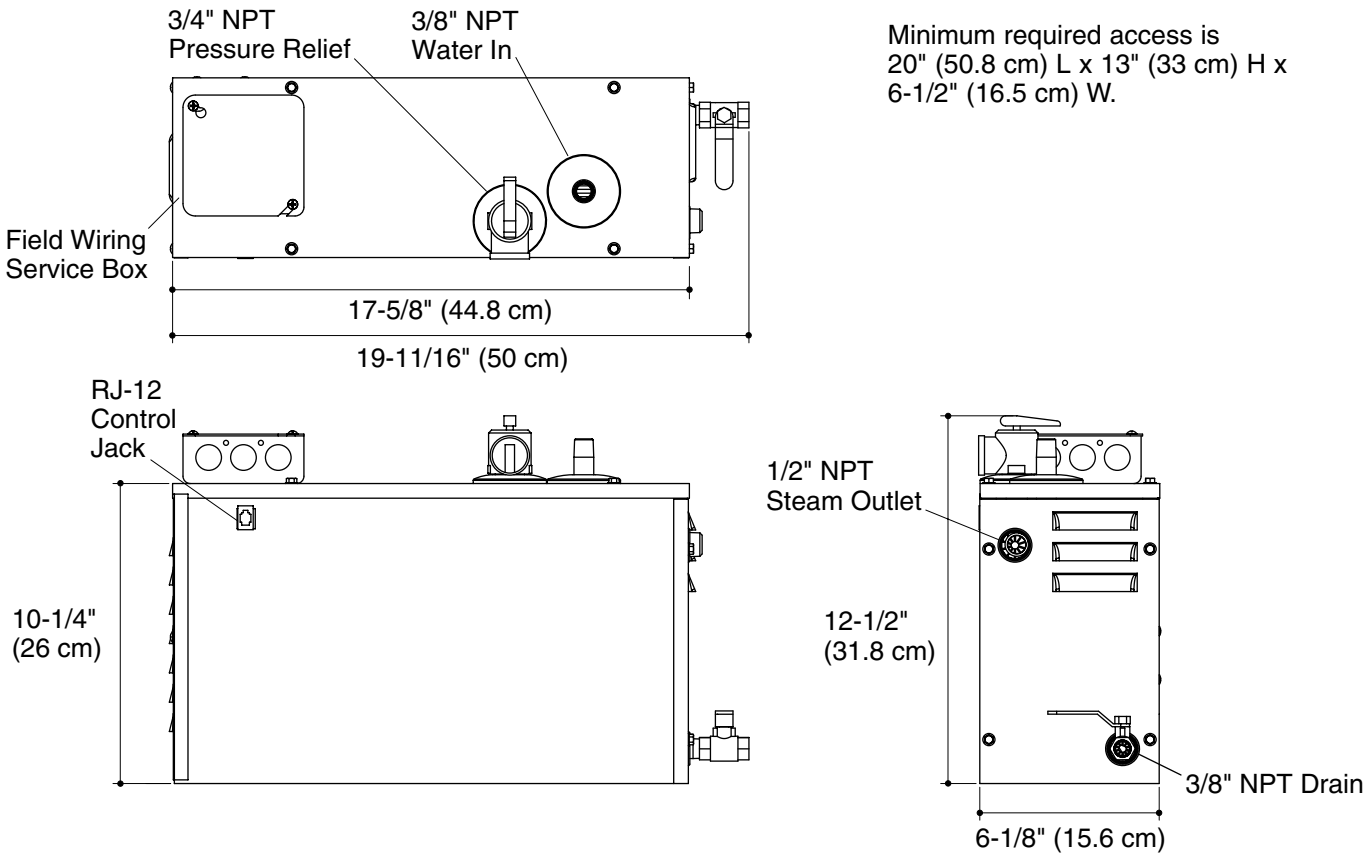

Product Diagram

THE BOLD LOOK OF KOHLER®