Ordering Information
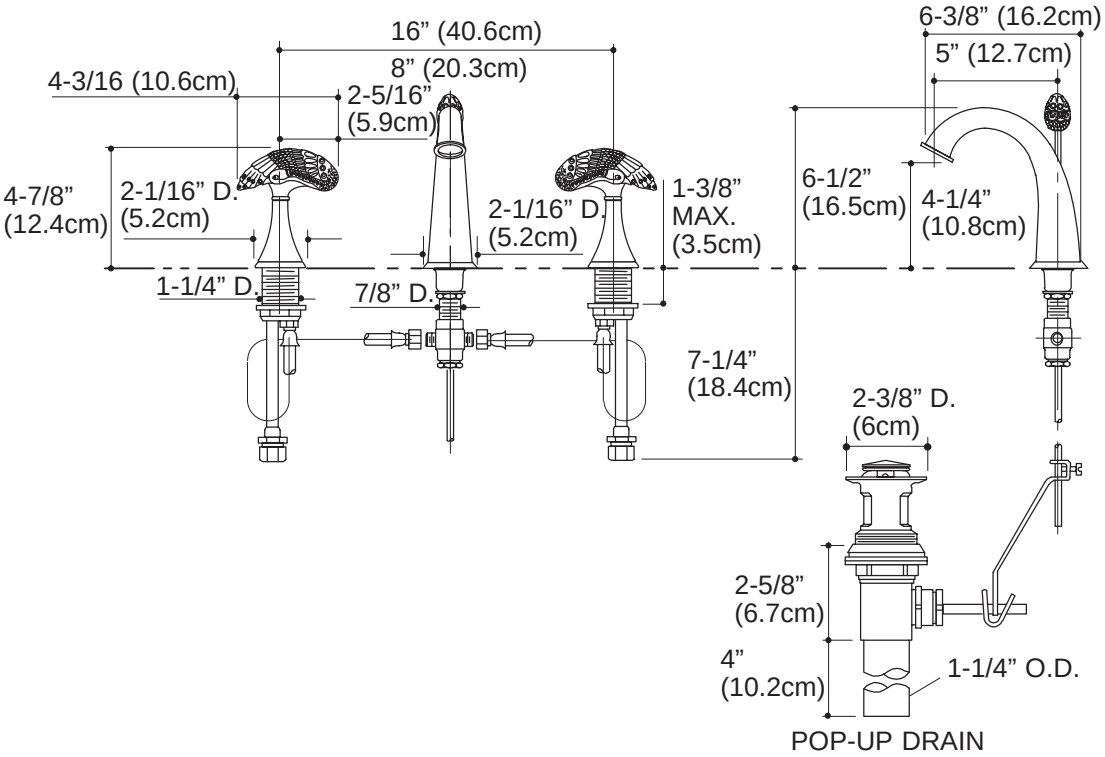
Mexico faucets and fittings have an **M** after the first sequence of numbers (such as K-12345**M**)	
Applicable faucet:	
With avian handles	K-610-6B
ADA Lever handles are ADA compliant