KOHLER®

Roughing-In

K-T8235
TABORET®
BATH FAUCET TRIM

Product Information

Applicable faucet trim:	
Lever handles with high-arch spout	K-T8235-4
Swirl lever handles with high-arch spout	K-T8235-4A
Applicable valve system:	
1/2″ high-flow*	K-300-K-NA
* Required for configuration illustrated.	
Handles are ADA compliant.	**ADA**

Optional accessories:	
Deep roughing-in for high-flow deck-mount bath faucets (all handles)	58598

Installation Notes

Install this product according to the installation guide.
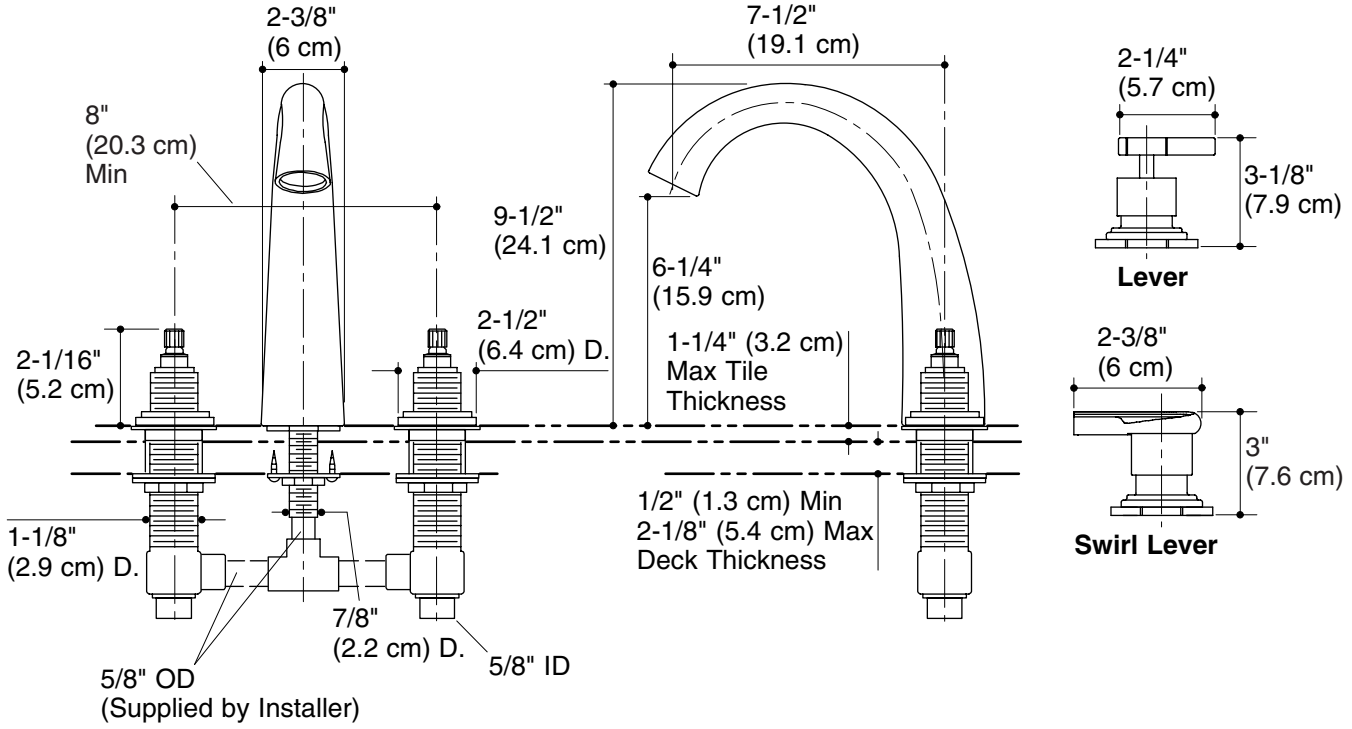
Dimensions allow +/- 1/4″ (0.6 cm) handle adjustment during handle trim installation.