Wynd 816

3/4" Thermostatic Mixing Valve

816/780/... 816/989/...

JADO

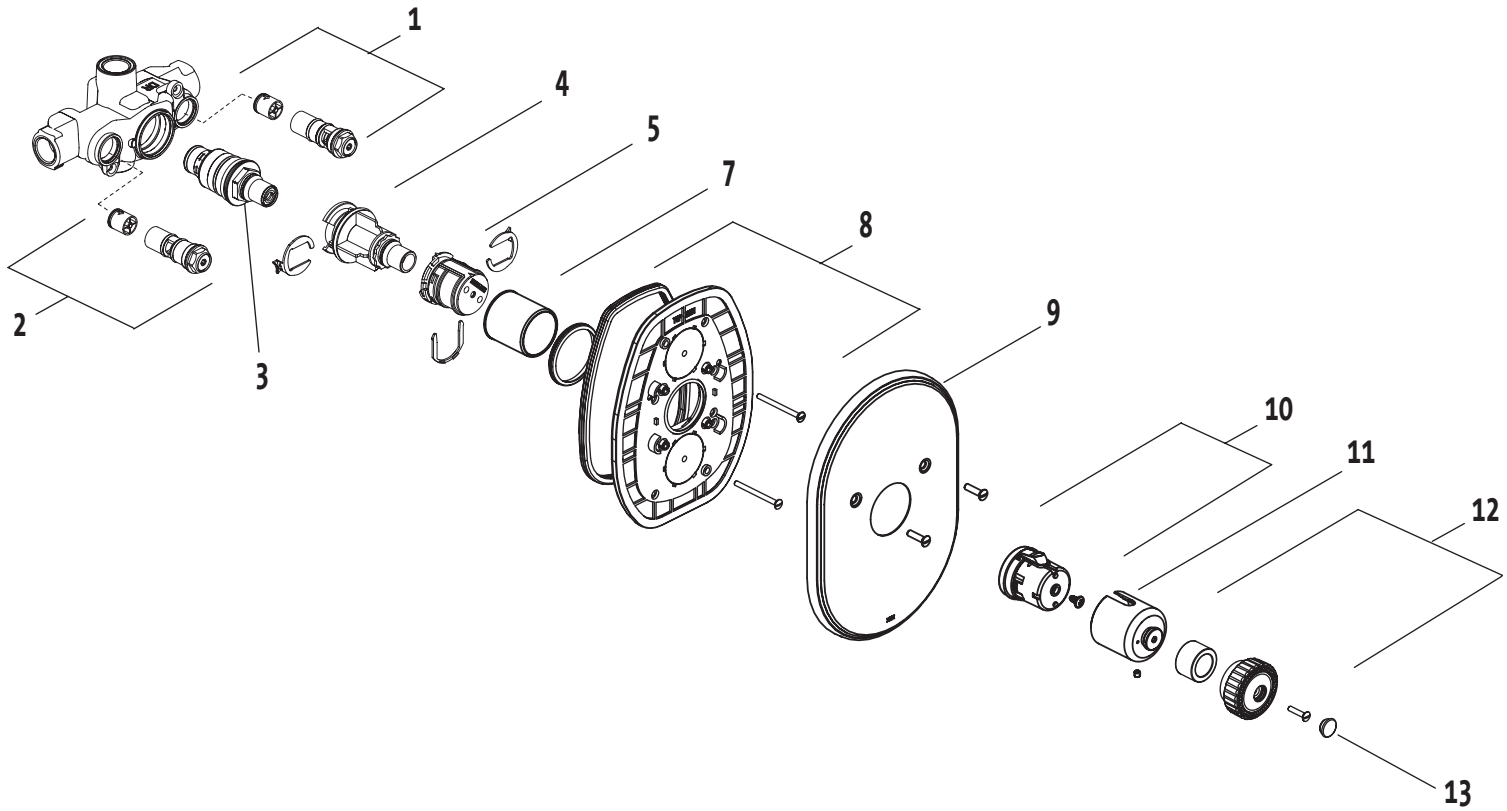

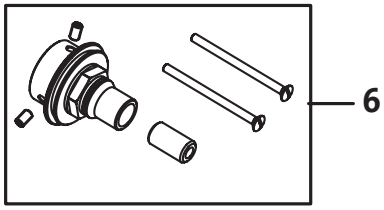

Replace "XXX" with the appropriate finish code:
Old Bronze = 105, Ultra Brass = 113, Brushed Nickel = 144,
Platinum Nickel = 150, Diamond Finish = 167

Example Repair Part order:
H961242.105 in Old Bronze
H961242.113 in Ultra Brass

Pos.	Description	**Repair Part Number**	Delivery quantity	Pos.	Description	**Repair Part Number**	Delivery quantity
1	Check Stop (Cold)	A962441.191	1 Piece	7	Cartridge Cap	H960680.XXX	1 Piece
2	Check Stop (Hot)	A962442.191	1 Piece	8	Trim Plate Holder	H961241.191	1 Piece
3	3/4" Thermo Cartridge	A962211.191	1 Piece	9	Trim Plate	H961242.XXX	1 Piece
4	Cartridge Adapter	A962443.191	1 Piece	10	Handle Adapter	H960004.191	1 Piece
5	Temperature Control Unit	H960618.191	1 Piece	11	Handle Base	H960677.XXX	1 Piece
6	Handle Extension Kit	H960892.191	1 Set	12	Control Handle	H961640.XXX	1 Piece
				13	Handle Cap	H960565.XXX	1 Piece