American Standard

RAVENNA™ PEDESTAL SINK
VITREOUS CHINA

RAVENNA™ PEDESTAL SINK

- Contemporary sleek design
- Made from vitreous china
- Rear overflow
- Faucet ledge with generous shelf area
- Supplied with mounting kit
- Optional integral mounted towel bar (ordered separately, installed by customer)
- **Design matched to Ravenna Toilets**
- Shown with 2000.101 Ceramix single lever faucet (not included)

❏ **0268.800** Faucet holes on 8" (203mm) centers
❏ **0268.400** Faucet holes on 4" (102mm) centers
❏ **0268.100** Center faucet hole only

Nominal Dimensions:
24-1/4" x 20" x 34"
(616 x 508 x 864mm)

Separate Components:
❏ **0268.008** Pedestal top-8" (203mm) centers
❏ **0268.004** Pedestal top-4" (102mm) centers
❏ **0268.001** Pedestal top-Center hole only
❏ **0041.000** Pedestal only

Bowl sizes:
19-3/8" (492mm) wide
11-7/8 (302mm) front to back
6" (152mm) deep

Compliance Certifications -
Meets or Exceeds the Following Specifications:
- ASME A112.19.2M for Vitreous China Fixtures
- CAN/CSA B45 Series

Recommended Component:
❏ Integral Towel Bar: 3520.000
(Specify 002 Chrome or 295 Satin Nickel)

To Be Specified:
❏ Color:
❏ Faucet*:
❏ Faucet Finish:
❏ Supplies:
❏ 1-1/4" Trap:

* See faucet section for additional models available

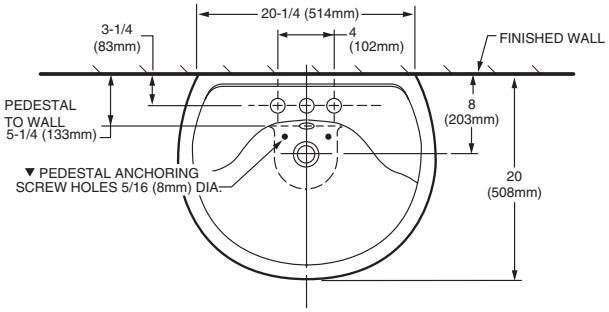

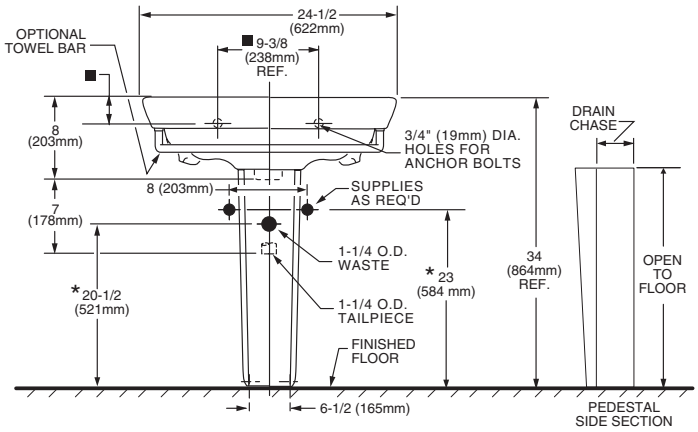

NOTES:
* DIMENSIONS SHOWN FOR LOCATION OF SUPPLIES AND "P" TRAP ARE SUGGESTED.
▼ PEDESTAL ANCHORING SCREWS NOT INCLUDED.
■ SUITABLE FOR REINFORCEMENT ONLY. ACTUAL DIMENSIONS MUST BE TAKEN FROM FIXTURE.
FITTINGS NOT INCLUDED AND MUST BE ORDERED SEPARATELY.
PROVIDE SUITABLE REINFORCEMENT FOR ALL WALL SUPPORTS.
INSTALLATION INSTRUCTIONS SUPPLIED WITH LAVATORY.

IMPORTANT: Dimensions of fixtures are nominal and may vary within the range of tolerances established by ANSI Standard A112.19.2.
These measurements are subject to change or cancellation. No responsibility is assumed for use of superseded or voided pages.

© 2006 American Standard Inc.
Revised 5/06