Prices effective February 3, 2025

Published March 2025

Height Adjustable Benching

Introduction	**page 2**
Nevi™ Link	**3**
Sit-to-Stand Bench	5
End Caps and Connecting Plates	12
Screen	18
Gallery Panel	23
Power	27
External Cable Manager	36
Renew™ Link	**45**
Sit-to-Stand Bench	47
End Caps and Connecting Plates	69
Screen	77
Gallery Panel	82
Power	87
External Cable Manager	95
Indices	**97**
By Name	97
By Number	99
Appendices	
20-Day or Less/Assigned Lead-Time Order Information	
Vary Easy Program	
Stain-to-Match Program	
Customer's Own Material Order Information-Workspaces	
Textiles Application Chart-Workspaces	
Textile Colors	

For the latest materials information, refer to the Materials pages on HermanMiller.com.

A Note on the Organization of This Book

There are a few signals that will help you understand the organization of this book. Once you know them, you should be able to find your way around easily.

Like a newspaper, this book is formatted with columns of text and illustrations that run vertically.

Information wraps from one column to the next and continues for as many pages as it needs to.

Black bars are clues.

A black bar at the top of a page signals the start of information about a product.

This information is divided into two sections, each signaled by a black bar. Product Information includes a description, additional notes, and dimensional drawings. Specification Information, which always begins at the top of a column, includes a series of steps. Each step represents a decision you need to make in order to complete your product number. Steps must be followed sequentially. The number of pages needed to complete information on a product varies; some will be complete in one page; others may fill three or four pages. Just continue going through the steps until you run into the next product, signaled by the black bar at the top of the page.

Black tabs running along the outside edge of the page help you locate what section you are in or what section you want to go to. You can thumb forwards or backwards to find a section; tabs and text appear on both sides of the page.

The additional pages in the back of the book include the appendices and indices. They are signaled by a long black bar running along the outside edge of the page.

The index is presented two ways.

The first index is in alphabetical order by product name. It can be helpful if you are new to the products and numbering scheme or if you are looking for a type of product, such as work chair or round table.

The second index is by product number. It lists, in alphanumeric order, the base product number, typically a five-digit number.

General Information

This book is effective February 3, 2025, subject to change without notice. Products may be purchased from authorized Herman Miller dealers who will quote prices upon request. For more information about our products and services or to see a list of dealers, visit www.HermanMiller.com.

All prices are list prices. Additional services, such as planning services, design, storage, and installation, are not included and must be added to these prices when the additional services are requested.

Illustrations, specifications, and prices are based on the latest information at the time of publication. The right is reserved to make changes at any time without notice in prices, fabrics, finishes, materials, specifications, and models, and also to discontinue models and finishes.

Dimensions shown in the drawings are engineering drawing dimensions rounded up to the nearest 1/8". Product is shipped set up or knocked down. Products that include "Shipped knocked down" in the description require some assembly. If this statement does not appear in the description, the product is shipped assembled.

Service problems are normally handled by a Herman Miller authorized dealer. Where this cannot be accomplished on a local level, service problems should be referred to the Customer Care Representative for your region, Herman Miller, Inc., Zeeland, Michigan 49464.

20-Day or Less/Assigned Lead-Time Shipments

All products and options in this price book not designated by an Assigned Program icon A will ship in **20 business days or less** after being acknowledged by Herman Miller.

Products and options designated by an A are on the assigned lead- time program and may ship in 20 days, less than 20 days, or more than 20 days from order acknowledgement.

Nevi™ Link Sit-to-Stand Bench

Nevi Link Back-to-Back Rectangular Height Adjustable Bench

DY2AS.

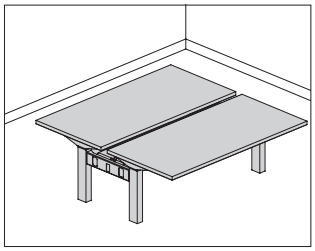

Product Information

Description

This rectangular back-to-back bench is a 2-workstation unit that can be used in back-to-back height adjustable benching applications in series with other Nevi™ Link back-to-back benches to create a run. Each workstation comes in a squared-edge style and has options for laminate top with thermoplastic edge or laminate top with thermoplastic backed plywood edge. There are multiple height adjustment, wire management, and switch options. Glides have ½″ of leveling adjustment. Shipped knocked down. Product is UL Listed.

Notes

Floor-to-top-of-surface height adjustment ranges are 27″-46″ for the electric standard range (EE) option and 22″-48″ for the electric extended range (DD) option.

To power bench applications, specify the following components separately:

- Power entry (DU1351)
- Power entry, New York City (DU1352)
- Junction block to Junction block jumper (DU1353)
- Duplex receptacle (DU1355)
- Junction block (DU1358.DBB)

Sizes listed for table depth and width are nominal. Depth of surface is reduced 1″ for cord management. Width of surface is reduced 1″ to minimize possible pinch point hazards between benches.

Cutouts are specified for both tables. If table 1 and table 2 need different cutout locations, specify no cutout (NC) and field cut to desired location.

Power access cutouts are specifically sized for Logic Mini (Y1414.).

For linear bench sections, the NYC Power Entry (DU1352.08) can only fit, and must be installed in, 60″-wide and wider sections. For 120° bench sections, the NYC Power Entry (DU1352.08) can only fit, and must be installed in, 54″-wide and wider sections.

Dimensions

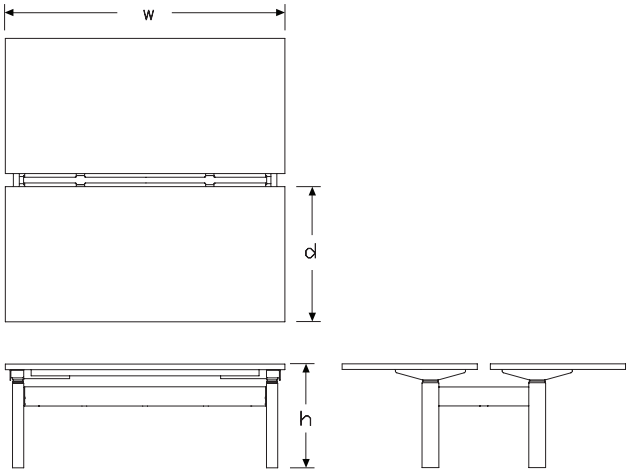

Nevi Link Back-to-Back Rectangular Height Adjustable Bench *continued*

Specification Information

Step 1.

DY2A

Step 2. Edge

S.	squared-edge

Step 3. Depth

24	24″ deep (23″ surface size)
30	30″ deep (29″ surface size)

Step 4. Width

48	48″ wide (47″ surface size)
54	54″ wide (53″ surface size)
60	60″ wide (59″ surface size)
66	66″ wide (65″ surface size)
72	72″ wide (71″ surface size)

Step 5. Surface Material

L	high-pressure laminate top/thermoplastic edge
U	high-pressure laminate/universal edge
M	thermally-fused laminate top/thermoplastic edge
T	thermally-fused laminate top/universal edge

Step 6. Height Adjustable Range Tables 1 and 2

DD	electric extended range
EE	electric standard range

Prices for Steps 1-6.

		LDD	LEE	UDD	UEE	MDD	MEE
DY2AS. 24	**48**	$6657	5791	6657	5791	6252	5439
	54	$6763	5880	6763	5880	6353	5523
	60	$6858	5964	6858	5964	6441	5603
	66	$6969	6062	6969	6062	6546	5694
	72	$7066	6147	7066	6147	6638	5774
30	**48**	$6794	5906	6794	5906	6381	5547
	54	$6902	6001	6902	6001	6482	5636
	60	$6999	6085	6999	6085	6574	5716
	66	$7111	6184	7111	6184	6679	5808
	72	$7212	6273	7212	6273	6775	5891

		TDD	TEE
DY2AS. 24	**48**	$6252	5439
	54	$6353	5523
	60	$6441	5603
	66	$6546	5694
	72	$6638	5774
30	**48**	$6381	5547
	54	$6482	5636
	60	$6574	5716
	66	$6679	5808
	72	$6775	5891

Step 7. Central Cable Trough Tables 1 and 2

For 48″ wide (47″ surface size) (48), 54″ wide (53″ surface size) (54), or 60″ wide (59″ surface size) (60)

BCT	basic cable trough - data/power routing and cord management	+$400
ECT	enhanced cable trough w/covers - data/power routing and cord management	+$700

For 66″ wide (65″ surface size) (66) or 72″ wide (71″ surface size) (72)

BCT	basic cable trough - data/power routing and cord management	+$600
ECT	enhanced cable trough w/covers - data/power routing and cord management	+$900

Step 8. Switch Option

STS	simple up/down touch switch	+$0
SUD	simple up down	+$100

Step 9. Under Work Surface Cable Management Tables 1 and 2

N	no under worksurface cable management	+$0

Step 10. Power Access Cutout - Tables 1 and 2

CC	center cutout for logic mini Y1414	+$45
LC	left cutout for logic mini Y1414	+$45
RC	right cutout for logic mini Y1414	+$45
NC	no cutout	+$0

Step 11. Top Finish

For high-pressure laminate top/thermoplastic edge (L) or high-pressure laminate/universal edge (U)

125	natural maple (CP)	+$0
126	natural cherry (CP)	+$0
127	walnut (CP)	+$0
139	light ash (CP)	+$0
140	warm ash (CP)	+$0
76	light brown walnut	+$0
8Q	folkstone grey (CP)	+$0
91	white (CP)	+$0
98	studio white (CP)	+$0
CL	cool grey neutral	+$0
HF	inner tone light	+$0
HP	light anigre	+$0
LBA	clear on ash (CP)	+$0
LBB	oak on ash (CP)	+$0
LBC	walnut on ash (CP)	+$0
LBF	neutral twill	+$0
LBJ	graphite twill	+$0
LBQ	white twill	+$0
LBR	phantom ecru A	+$0
LBS	phantom cocoa A	+$0
LBU	medium matte walnut (CP) A	+$0
LBV	warm grey teak A	+$0
LT	light tone	+$0
LU	soft white	+$0
WL	warm stone (CP)	+$0
WN	warm grey neutral	+$0

For thermally-fused laminate top/thermoplastic edge (M) or thermally-fused laminate top/universal edge (T)

125	natural maple (CP)	+$0
126	natural cherry (CP)	+$0
127	walnut (CP)	+$0
139	light ash (CP)	+$0
140	warm ash (CP)	+$0
8Q	folkstone grey (CP)	+$0
91	white (CP)	+$0
98	studio white (CP)	+$0
LBA	clear on ash (CP)	+$0
LBB	oak on ash (CP)	+$0
LBC	walnut on ash (CP)	+$0
LBF	neutral twill	+$0
LBQ	white twill	+$0
LBU	medium matte walnut (CP)	+$0

Step 12. Edge Finish

For high-pressure laminate top/thermoplastic edge (L) or thermally-fused laminate top/thermoplastic edge (M)

125	natural maple (CP)	+$0
126	natural cherry (CP)	+$0
127	walnut (CP)	+$0
139	light ash (CP)	+$0
140	warm ash (CP)	+$0
76	light brown walnut	+$0
8Q	folkstone grey (CP)	+$0
91	white (CP)	+$0
98	studio white (CP)	+$0
CL	cool grey neutral	+$0
G1	graphite (CP)	+$0
HF	inner tone light	+$0
HP	light anigre	+$0
LBA	clear on ash (CP)	+$0
LBB	oak on ash (CP)	+$0
LBC	walnut on ash (CP)	+$0
LBF	neutral twill	+$0
LBJ	graphite twill	+$0
LBQ	white twill	+$0
LBR	phantom ecru	+$0
LBS	phantom cocoa	+$0
LBU	medium matte walnut (CP)	+$0
LBV	warm grey teak	+$0
LU	soft white	+$0
UBK	ultra black (CP)	+$0
WL	warm stone (CP)	+$0
WN	warm grey neutral	+$0

For high-pressure laminate/universal edge (U) or thermally-fused laminate top/universal edge (T)

PLY	plywood edge	+$50

Step 13. Base Finish

Metallic Paint

611	beige mist metallic (CP)	+$0
613	silver (CP)	+$0
SNA	satin aluminum	+$60
SNB	satin bronze	+$60
SNC	satin carbon	+$60

Nevi Link Back-to-Back Rectangular Height Adjustable Bench *continued*

Sand Texture Paint		
BK	black	+$0
UBK	ultra black (CP)	+$0

Smooth Paint		
8Q	folkstone grey (CP)	+$0
91	white (CP)	+$0
98	studio white (CP)	+$0
G1	graphite (CP)	+$0
WL	warm stone (CP)	+$0
WN	warm grey neutral	+$0

Nevi Link 120 Degree Height Adjustable Bench

DY3AS.

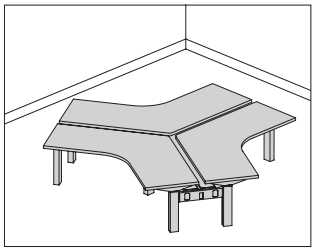

Product Information

Description

This 120° back-to-back bench is a 3-workstation unit that can be used in back-to-back height adjustable benching applications in series with other Nevi™ Link back-to-back benches. Each workstation comes in a squared-edge style and has a laminate top with thermoplastic edge. There are multiple height adjustment, wire management, and switch options. Glides have ½″ of leveling adjustment. Shipped knocked down. Product is UL Listed.

Notes

Floor-to-top-of-surface height adjustment ranges are 27″-46″ for the electric standard range (EEE) option and 22″-48″ for the electric extended range (DDD) option.

To power bench applications, order Connect™ separately. See planning guide for details. Up to 4 duplexes per station.

Sizes listed for table depth and width are nominal. Depth of surface is reduced 1″ for cord management. Width of surface is reduced 1″ to minimize possible pinch point hazards between benches.

When specifying height adjustable range (EEE or DDD), all 3 tables will be the same range (standard or extended).

For linear bench sections, the NYC Power Entry (DU1352.08) can only fit, and must be installed in, 60″-wide and wider sections. For 120° bench sections, the NYC Power Entry (DU1352.08) can only fit, and must be installed in, 54″-wide and wider sections.

Dimensions

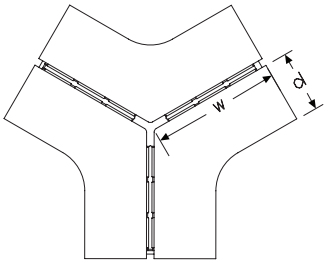

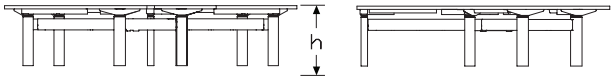

Specification Information

Step 1.

DY3A

Step 2. Edge

S. squared-edge

Step 3. Depth

24 24″ deep (23″ surface size)
30 30″ deep (29″ surface size)

Step 4. Width

48 48″ wide (47″ surface size)
54 54″ wide (53″ surface size)
60 60″ wide (59″ surface size)

Step 5. Surface Material

L high-pressure laminate top/thermoplastic edge
M thermally-fused laminate top/thermoplastic edge

Step 6. Height Adjustable Range Tables 1, 2, and 3

DDD electric extended range
EEE electric standard range

Prices for Steps 1-6.

		LDDD	LEEE	MDDD	MEEE
DY3AS. 24	**48**	$18202	15828	17096	14867
	54	$19294	16778	18123	15759
	60	$20450	17784	19208	16703
30	**48**	$19426	16891	18249	15868
	54	$20591	17905	19344	16820
	60	$21826	18980	20506	17831

Step 7. Central Cable Trough Tables 1, 2, and 3

For 48″ wide (47″ surface size) (48) or 54″ wide (53″ surface size) (54)

BCT basic cable trough - data/power routing and cord management +$1200
ECT enhanced cable trough w/covers - data/power routing and cord management +$2100

For 60″ wide (59″ surface size) (60)

BCT basic cable trough - data/power routing and cord management +$1200
ECT enhanced cable trough w/covers - data/power routing and cord management +$2100

Step 8. Switch Option		
STS	simple up/down touch switch	+$0
SUD	simple up down	+$150

Step 9. Under Work Surface Cable Management Tables 1, 2, and 3		
N	no under worksurface cable management	+$0

Step 10. Power Access Cutout - Tables 1, 2, and 3		
LC	left cutout for logic mini Y1414	+$68
NC	no cutout	+$0
RC	right cutout for logic mini Y1414	+$68

Step 11. Top Finish

For high-pressure laminate top/thermoplastic edge (L)

125	natural maple (CP)	+$0
126	natural cherry (CP)	+$0
127	walnut (CP)	+$0
139	light ash (CP)	+$0
140	warm ash (CP)	+$0
76	light brown walnut	+$0
8Q	folkstone grey (CP)	+$0
91	white (CP)	+$0
98	studio white (CP)	+$0
CL	cool grey neutral	+$0
HF	inner tone light	+$0
HP	light anigre	+$0
LBA	clear on ash (CP)	+$0
LBB	oak on ash (CP)	+$0
LBC	walnut on ash (CP)	+$0
LBF	neutral twill	+$0
LBJ	graphite twill	+$0
LBQ	white twill	+$0
LBR	phantom ecru A	+$0
LBS	phantom cocoa A	+$0
LBU	medium matte walnut (CP) A	+$0
LBV	warm grey teak A	+$0
LT	light tone	+$0
LU	soft white	+$0
WL	warm stone (CP)	+$0
WN	warm grey neutral	+$0

For thermally-fused laminate top/thermoplastic edge (M)

125	natural maple (CP)	+$0
126	natural cherry (CP)	+$0
127	walnut (CP)	+$0
139	light ash (CP)	+$0
140	warm ash (CP)	+$0
8Q	folkstone grey (CP)	+$0
91	white (CP)	+$0
98	studio white (CP)	+$0
LBA	clear on ash (CP)	+$0
LBB	oak on ash (CP)	+$0
LBC	walnut on ash (CP)	+$0
LBF	neutral twill	+$0
LBQ	white twill	+$0
LBU	medium matte walnut (CP)	+$0

Step 12. Edge Finish

125	natural maple (CP)	+$0
126	natural cherry (CP)	+$0
127	walnut (CP)	+$0
139	light ash (CP)	+$0
140	warm ash (CP)	+$0
76	light brown walnut	+$0
8Q	folkstone grey (CP)	+$0
91	white (CP)	+$0
98	studio white (CP)	+$0
CL	cool grey neutral	+$0
G1	graphite (CP)	+$0
HF	inner tone light	+$0
HP	light anigre	+$0
LBA	clear on ash (CP)	+$0
LBB	oak on ash (CP)	+$0
LBC	walnut on ash (CP)	+$0
LBF	neutral twill	+$0
LBJ	graphite twill	+$0
LBQ	white twill	+$0
LBR	phantom ecru	+$0
LBS	phantom cocoa	+$0
LBU	medium matte walnut (CP)	+$0
LBV	warm grey teak	+$0
LU	soft white	+$0
UBK	ultra black (CP)	+$0
WL	warm stone (CP)	+$0
WN	warm grey neutral	+$0

Step 13. Base Finish		
Sand Texture Paint		
BK	black	+$0
UBK	ultra black (CP)	+$0
Smooth Paint		
8Q	folkstone grey (CP)	+$0
91	white (CP)	+$0
98	studio white (CP)	+$0
G1	graphite (CP)	+$0
WL	warm stone (CP)	+$0
WN	warm grey neutral	+$0
Metallic Paint		
611	beige mist metallic (CP)	+$0
613	silver (CP)	+$0
SNA	satin aluminum	+$60
SNB	satin bronze	+$60
SNC	satin carbon	+$60

End Caps - Basic Cable Trough DY4EC.

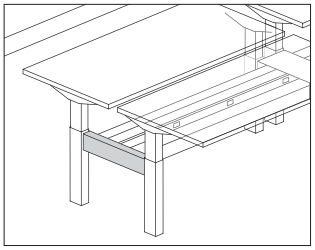

Product Information

Description

This cover plate creates a clean and finished aesthetic at the end of a run. Finishes are available to match the base finishes of Nevi™ Link benches. Product is UL Listed.

Notes

End Caps-Basic Cable Trough are for use with height adjustable benching solutions with the basic cable trough (BCT) wire management option.

For height adjustable benching solutions with the enhanced cable trough (ECT) wire management option, see the End Caps-Enhanced Cable Trough (DU4B., DU4S.).

For back-to-back applications, specify end cap-2 per box (EC) option. End caps are placed on each end of the run.

For 120° applications, specify 1 option of 2 per box (EC) and 1 option of 1 per box (EF) for a total of 3 end caps.

Dimensions

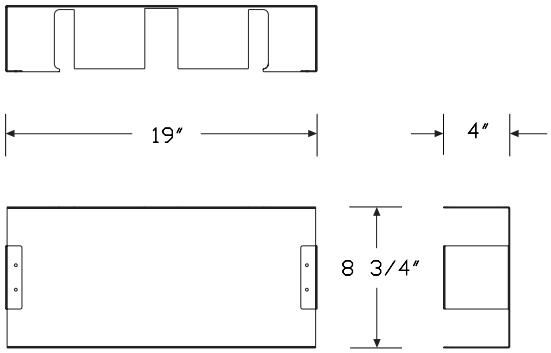

Specification Information

Step 1.

DY4

Step 2. End Cap Quantity

EC.	end cap - 2 per box

Prices for Steps 1-2.

DY4EC.	$218

Step 3. Finish

Metallic Paint

611	beige mist metallic (CP)	+$0
613	silver (CP)	+$0
SNA	satin aluminum	+$30
SNB	satin bronze	+$30
SNC	satin carbon	+$30

Sand Texture Paint

BK	black	+$0
UBK	ultra black (CP)	+$0

Smooth Paint

G1	graphite (CP)	+$0
8Q	folkstone grey (CP)	+$0
91	white (CP)	+$0
98	studio white (CP)	+$0
WL	warm stone (CP)	+$0
WN	warm grey neutral	+$0

Connecting Plate - Basic Cable Trough DY4CP.

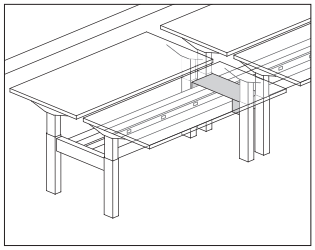

Product Information

Description

This cover plate creates a clean and finished aesthetic where bench sections come together. Finishes are available to match the base finishes of Nevi™ Link benches. Package contains 1 connecting plate. Product is UL Listed.

Notes

Connecting Plate-Basic Cable Trough are for use with height adjustable benching solutions with the basic cable trough (BCT) wire management option.

For height adjustable benching solutions with the enhanced cable trough (ECT) wire management option, see the Connecting Plate-Enhanced Cable Trough (DU4B., DU4S.).

Connecting plate is required to connect 1 bench section to another section. The number of connecting plates needed in a run is 1 less than the number of bench sections in the run.

Dimensions

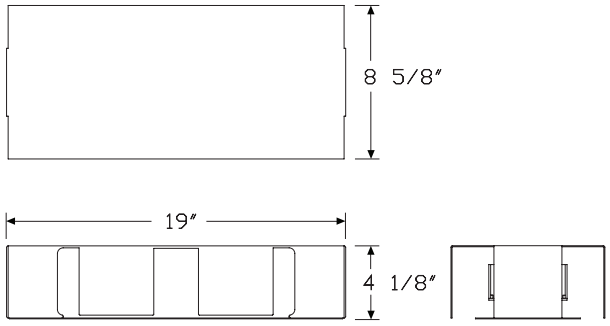

Specification Information

Step 1.

DY4

Step 2. Connecting Plate or End Cap

CP.	connecting plate (between tables) 1x box	

Prices for Steps 1-2.

DY4CP.		$244

Step 3. Finish

Metallic Paint

611	beige mist metallic (CP)	+$0
613	silver (CP)	+$0
SNA	satin aluminum	+$30
SNB	satin bronze	+$30
SNC	satin carbon	+$30

Sand Texture Paint

BK	black	+$0

Smooth Paint

8Q	folkstone grey (CP)	+$0
91	white (CP)	+$0
98	studio white (CP)	+$0
G1	graphite (CP)	+$0
WL	warm stone (CP)	+$0
WN	warm grey neutral	+$0

End Caps - Enhanced Cable Trough

DU4B.
DU4S.

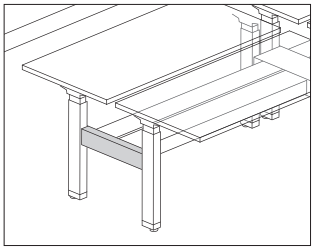

Product Information

Description

These cover plates create a clean and finished aesthetic at the end of runs. Finishes are available to match the base finishes of Renew™ Link and Nevi™ Link benches. Product is UL Listed.

Notes

For single sided bench runs, specify single sided (DU4S.EC). Single sided end caps (DU4S.EC) do not work with Nevi Link. For back to back bench runs, specify back to back (DU4B.EC).

Only 1 set of end caps needed per run. End caps are placed on each end of the run.

End Caps-Enhanced Cable Trough are for use with height adjustable benching solutions with the enhanced cable trough (ECT) wire management option.

For height adjustable benching solutions with the basic cable trough (BCT) wire management option, see the End Caps-Basic Cable Trough (DY4EC., DY4EF.).

Dimensions

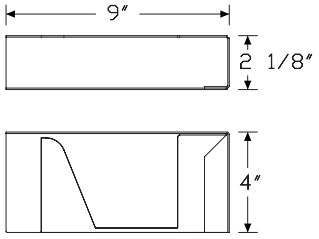

Single Sided

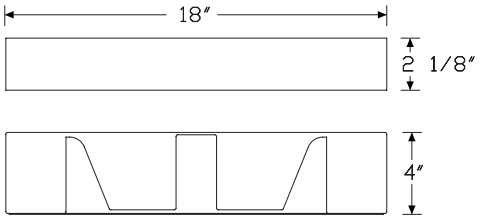

Back to Back

Specification Information

Step 1.

DU4

Step 2. Single Sided or Back to Back

S.	single sided
B.	back to back

Step 3. End Cap Quantity

EC	end cap - 2 per box

Prices for Steps 1-3.

DU4S.	**EC**	$201
DU4B.	**EC**	$250

Step 4. Finish

Metallic Paint		
611	beige mist metallic (CP)	+$0
613	silver (CP)	+$0
SNA	satin aluminum	+$30
SNB	satin bronze	+$30
SNC	satin carbon	+$30
Sand Texture Paint		
BK	black	+$0
UBK	ultra black (CP)	+$0
Smooth Paint		
8Q	folkstone grey (CP)	+$0
91	white (CP)	+$0
98	studio white (CP)	+$0
G1	graphite (CP)	+$0
WL	warm stone (CP)	+$0
WN	warm grey neutral	+$0

Connecting Plate - Enhanced Cable Trough

DU4B.
DU4S.

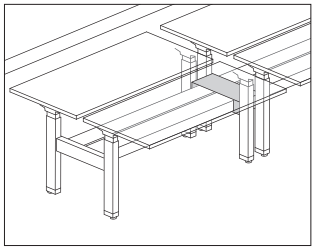

Product Information

Description

These cover plates create a clean and finished aesthetic where bench sections come together. Finishes are available to match the base finishes of Renew™ Link and Nevi™ Link benches. Connecting plates come 1 per package. Product is UL Listed.

Notes

For single sided bench runs, specify single sided (DU4S.CP). For back to back bench runs, specify back to back (DU4B.CP).

Connecting plates are required to connect 1 bench section to another section. The number of connecting plates needed in a run is 1 less than the number of bench sections in the run.

Connecting Plate-Enhanced Cable Trough is for use with height adjustable benching solutions with the enhanced cable trough (ECT) wire management option.

For height adjustable benching solutions with the basic cable trough (BCT) wire management option, see the Connecting Plate-Basic Cable Trough (DY4CP.).

Dimensions

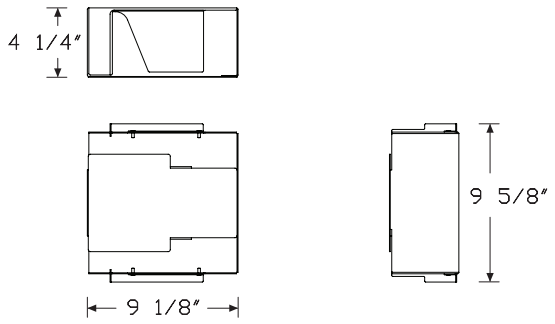

Single Sided

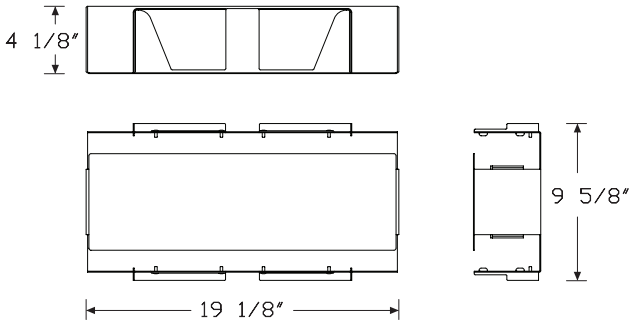

Back to Back

Connecting Plate - Enhanced Cable Trough *continued*

Specification Information

Step 1.

DU4

Step 2. Single Sided or Back to Back

S.	single sided
B.	back to back

Step 3. Connecting Plate or End Cap

CP	connecting plate (between tables) 1x box

Prices for Steps 1-3.

DU4S.	**CP**	$243
DU4B.	**CP**	$281

Step 4. Finish

Metallic Paint

611	beige mist metallic (CP)	+$0
613	silver (CP)	+$0
SNA	satin aluminum	+$30
SNB	satin bronze	+$30
SNC	satin carbon	+$30

Sand Texture Paint

BK	black	+$0
UBK	ultra black (CP)	+$0

Smooth Paint

8Q	folkstone grey (CP)	+$0
91	white (CP)	+$0
98	studio white (CP)	+$0
G1	graphite (CP)	+$0
WL	warm stone (CP)	+$0
WN	warm grey neutral	+$0

Single End Cap - Basic Cable Trough DY4EF.

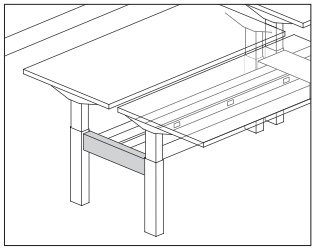

Product Information

Description

This cover plate creates a clean and finished aesthetic at the end of a run. Finishes are available to match the base finishes of Nevi™ Link benches. Product is UL Listed.

Notes

End Caps-Basic Cable Trough are for use with height adjustable benching solutions with the basic cable trough (BCT) wire management option.

For height adjustable benching solutions with the enhanced cable trough (ECT) wire management option, see the End Caps-Enhanced Cable Trough (DU4B., DU4S.).

For back-to-back applications, specify end cap-2 per box (EC) option. End caps are placed on each end of the run.

For 120° applications, specify 1 option of 2 per box (EC) and 1 option of 1 per box (EF) for a total of 3 end caps.

Dimensions

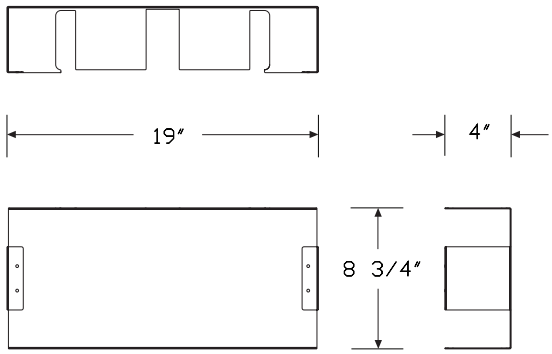

Specification Information

Step 1.

DY4

Step 2. End Cap Quantity

EF.	end cap - 1 per box

Prices for Steps 1-2.

DY4EF.	$111

Step 3. Finish

Metallic Paint

611	beige mist metallic (CP)	+$0
613	silver (CP)	+$0
SNA	satin aluminum	+$30
SNB	satin bronze	+$30
SNC	satin carbon	+$30

Sand Texture Paint

BK	black	+$0
UBK	ultra black (CP)	+$0

Smooth Paint

8Q	folkstone grey (CP)	+$0
91	white (CP)	+$0
98	studio white (CP)	+$0
G1	graphite (CP)	+$0
WL	warm stone (CP)	+$0
WN	warm grey neutral	+$0

Screen, Trough Mounted

DU8E.
DU8F.
DU8G.
DU8L.

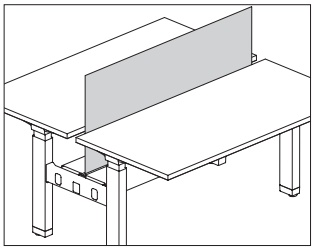

Product Information

Description

This screen provides privacy between workstations and can create privacy and boundary from adjacent work areas. Installed height of all screen tops is 46″. Screens are tackable fabric, laminate, or glass. Attachment hardware included.

Notes

Finish for glass screen hardware is always anodized (AN).

Back to back screen (BB) to be used with back to back bench applications.

Gallery screens (BG, SG) to be used on the end of back to back or single sided bench applications, respectively, and in conjunction with end of run gallery panels (DU9R.).

For use with boundary gallery panel (DU9B.) in single sided applications, specify single sided boundary gallery screen (SG). Single sided gallery (DU8x.SG) and single sided boundary (DU8x.SB) screens do not work with Nevi™ Link.

Screen accepts Customer's Own Material (COM). Yardage is estimated for nondirectional 54″-wide fabrics.

For vertical fabric direction (T):

Application-Width—Yardage

SG24—1.45
SG30—1.45
SB48—1.45
BG48—1.45
BB48—2.14

For horizontal fabric direction (R):

Application-Width—Yardage

SG24—0.97
SG30—1.14
SB48—1.71
SB54—1.90
SB60—2.07
SB66—2.27
SB72—2.46
BG48—1.71
BG60—2.07
BB48—3.15
BB54—3.52
BB60—3.91
BB66—4.28
BB72—4.67

For information on multiple quantities or directional fabrics, contact COM Department. See Order Information in Appendices.

Dimensions

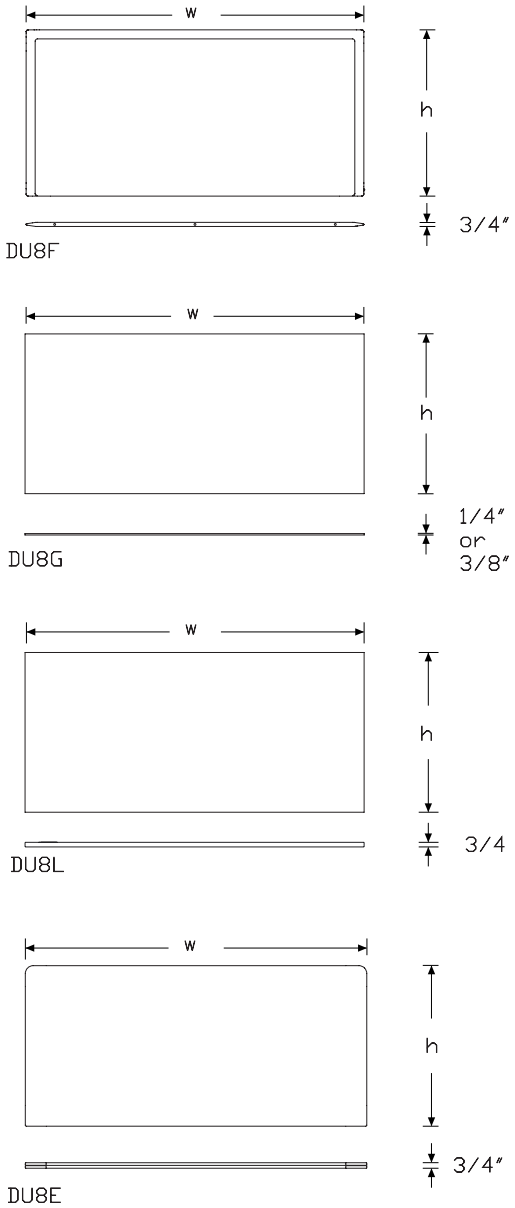

Specification Information

Step 1.

DU8

Step 2. Edge

F. Pari fabric screen
G. glass
E. flat edge fabric screen
L. high-pressure laminate

Step 3. Application

For Pari fabric screen (F.) or flat edge fabric screen (E.)

SG single side gallery
SB single side boundary
BG back to back gallery
BB back to back

For high-pressure laminate (L.)

BB back to back

For glass (G.)

BB back to back

Step 4. Width

For single side gallery (SG)

24 24″ wide
30 30″ wide

For single side boundary (SB)

48 48″ wide
54 54″ wide
60 60″ wide
66 66″ wide
72 72″ wide

For back to back gallery (BG)

48 48″ wide
60 60″ wide

For back to back (BB)

48 48″ wide
54 54″ wide
60 60″ wide
66 66″ wide
72 72″ wide

For back to back (BB)

48 48″ wide
60 60″ wide
72 72″ wide

Step 5. Surface Material

For Pari fabric screen (F.) or flat edge fabric screen (E.) with 24″ wide (24), 48″ wide (48), or 30″ wide (30)

T tackable fabric
R tackable fabric, horizontal

For Pari fabric screen (F.) or flat edge fabric screen (E.) with 54″ wide (54), 60″ wide (60), 66″ wide (66), or 72″ wide (72)

R tackable fabric, horizontal

For glass (G.)

5A opal etched - 1/4″ thick
C3 clear glass - 3/8″ thick
G3 opal glass - 3/8″ thick
N3 no glass- for customer's own glass 3/8″
NN no glass- for customer's own glass 1/4″
TR clear glass - 1/4″ thick

For high-pressure laminate (L.)

L high-pressure laminate/thermoplastic edge
U high-pressure laminate/universal edge

Prices for Steps 1-5.

			5A	L	U	T	C3	R
DU8F.	**SG**	**24**	—	—	—	$855	—	830
		30	—	—	—	$1161	—	1161
	SB	**48**	—	—	—	$1245	—	1245
		54	—	—	—	—	—	$1327
		60	—	—	—	—	—	$1410
		66	—	—	—	—	—	$1492
		72	—	—	—	—	—	$1657
	BG	**48**	—	—	—	$1245	—	1245
		60	—	—	—	—	—	$1327
	BB	**48**	—	—	—	$1989	—	1989
		54	—	—	—	—	—	$2114
		60	—	—	—	—	—	$2237
		66	—	—	—	—	—	$2359
		72	—	—	—	—	—	$2485

			5A	L	U	T	C3	R
DU8G.	**BB**	**48**	$1407	—	—	—	1863	—
		60	$1771	—	—	—	2468	—
		72	$2172	—	—	—	3074	—

			G3	N3	NN	TR
DU8G.	**BB**	**48**	$2427	417	408	1135
		60	$2708	449	449	1538
		72	$3317	517	505	1943

			5A	L	U	T	C3	R
DU8E.	**SG**	**24**	—	—	—	$186	—	178
		30	—	—	—	$525	—	505
	SB	**48**	—	—	—	$608	—	589
		54	—	—	—	—	—	$674
		60	—	—	—	—	—	$787
		66	—	—	—	—	—	$901
		72	—	—	—	—	—	$1013
	BG	**48**	—	—	—	$608	—	589
		60	—	—	—	—	—	$702
	BB	**48**	—	—	—	$1324	—	1324
		54	—	—	—	—	—	$1452
		60	—	—	—	—	—	$1578
		66	—	—	—	—	—	$1686
		72	—	—	—	—	—	$1795

			5A	L	U	T	C3	R
DU8L.	**BB**	**48**	—	$940	916	—	—	—
		54	—	$981	956	—	—	—
		60	—	$1023	998	—	—	—
		66	—	$1114	1086	—	—	—
		72	—	$1209	1179	—	—	—

Step 6. Hardware Color

For Pari fabric screen (F.), flat edge fabric screen (E.), or high-pressure laminate (L.)

NNN	none	+$0

For glass (G.)

AN	anodized	+$0

Step 7. Fabric

For Pari fabric screen (F.) or flat edge fabric screen (E.) with 24" wide (24), or 30" wide (30)

Price Category 1	+$0
Price Category 2	+$17
Price Category 3	+$41
Price Category 4	+$72
Price Category 5	+$120
Price Category B	+$79
Price Category C	+$79
Price Category E	+$262

For Pari fabric screen (F.) or flat edge fabric screen (E.) with 48" wide (48)

Price Category 1	+$0
Price Category 2	+$22
Price Category 3	+$53
Price Category 4	+$91
Price Category 5	+$154
Price Category B	+$101
Price Category C	+$101
Price Category E	+$262

For Pari fabric screen (F.) or flat edge fabric screen (E.) with 54" wide (54), or 60" wide (60)

Price Category 1	+$0
Price Category 2	+$28
Price Category 3	+$66
Price Category 4	+$114
Price Category 5	+$192
Price Category B	+$126
Price Category C	+$126
Price Category E	+$262

For Pari fabric screen (F.) or flat edge fabric screen (E.) with 66" wide (66)

Price Category E	+$262
Price Category C	+$143
Price Category B	+$143
Price Category 1	+$0
Price Category 2	+$31
Price Category 3	+$74
Price Category 4	+$130
Price Category 5	+$217

For Pari fabric screen (F.) or flat edge fabric screen (E.) with 72″ wide (72)	
Price Category E	+$262
Price Category C	+$143
Price Category B	+$143
Price Category 1	+$0
Price Category 2	+$34
Price Category 3	+$80
Price Category 4	+$140
Price Category 5	+$235

For Pari fabric screen (F.) or flat edge fabric screen (E.) with 48″ wide (48)	
Price Category E	+$262
Price Category C	+$155
Price Category B	+$155
Price Category 1	+$0
Price Category 2	+$38
Price Category 3	+$90
Price Category 4	+$157
Price Category 5	+$263

For Pari fabric screen (F.) or flat edge fabric screen (E.) with 54″ wide (54), or 60″ wide (60)	
Price Category E	+$262
Price Category C	+$234
Price Category B	+$234
Price Category 1	+$0
Price Category 2	+$52
Price Category 3	+$122
Price Category 4	+$212
Price Category 5	+$356

For Pari fabric screen (F.) or flat edge fabric screen (E.) with 66″ wide (66)	
Price Category 1	+$0
Price Category 2	+$59
Price Category 3	+$140
Price Category 4	+$245
Price Category 5	+$410
Price Category B	+$270
Price Category C	+$270
Price Category E	+$262

For Pari fabric screen (F.) or flat edge fabric screen (E.) with 72″ wide (72)	
Price Category 1	+$0
Price Category 2	+$65
Price Category 3	+$154
Price Category 4	+$266
Price Category 5	+$448
Price Category B	+$294
Price Category C	+$294
Price Category E	+$262

Step 8. Grain Direction

For high-pressure laminate (L.) with 48″ wide (48), or 54″ wide (54), or 60″ wide (60)		
VTG	vertical grain	+$0
HRG	horizontal grain	+$0

For high-pressure laminate (L.) with 66″ wide (66), or 72″ wide (72)		
HRG	horizontal grain	+$0

Step 9. Surface Finish

For high-pressure laminate/thermoplastic edge (L) or high-pressure laminate/universal edge (U)

125	natural maple (CP)	+$0
126	natural cherry (CP)	+$0
127	walnut (CP)	+$0
139	light ash (CP)	+$0
140	warm ash (CP)	+$0
76	light brown walnut	+$0
8Q	folkstone grey (CP)	+$0
91	white (CP)	+$0
98	studio white (CP)	+$0
CL	cool grey neutral	+$0
HP	light anigre	+$0
LBA	clear on ash (CP)	+$0
LBB	oak on ash (CP)	+$0
LBC	walnut on ash (CP)	+$0
LBF	neutral twill	+$0
LBJ	graphite twill	+$0
LBQ	white twill	+$0
LBR	phantom ecru	+$0
LBS	phantom cocoa	+$0
LBU	medium matte walnut (CP)	+$0
LBV	warm grey teak	+$0
LU	soft white	+$0
WL	warm stone (CP)	+$0
WN	warm grey neutral	+$0

Step 10. Edge Finish

For high-pressure laminate/thermoplastic edge (L)

125	natural maple (CP)	+$0
126	natural cherry (CP)	+$0
127	walnut (CP)	+$0
139	light ash (CP)	+$0
140	warm ash (CP)	+$0
UBK	ultra black (CP)	+$0
76	light brown walnut	+$0
8Q	folkstone grey (CP)	+$0
91	white (CP)	+$0
98	studio white (CP)	+$0
CL	cool grey neutral	+$0
HF	inner tone light	+$0
HP	light anigre	+$0
LBA	clear on ash (CP)	+$0
LBR	phantom ecru	+$0
LBS	phantom cocoa	+$0
LBU	medium matte walnut (CP)	+$0
LBV	warm grey teak	+$0
LBB	oak on ash (CP)	+$0
LBC	walnut on ash (CP)	+$0
LBF	neutral twill	+$0
LBJ	graphite twill	+$0
LBQ	white twill	+$0
LU	soft white	+$0
WL	warm stone (CP)	+$0
WN	warm grey neutral	+$0

For high-pressure laminate/universal edge (U)

PLY	plywood edge	+$50

Gallery Panel

DU9B.
DU9R.

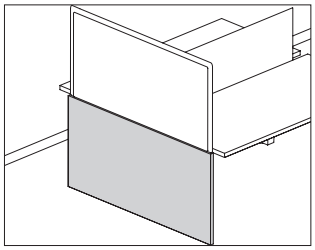

Product Information

Description

This gallery panel creates a finished and polished look to end of run or single sided applications. It also creates boundary for a single sided bench and an adjacent work space or aisle. The panel is laminate with thermoplastic edge, laminate with universal edge, or veneer with veneer edge. Edges are square. Glides have ½″ of leveling adjustment.

Notes

For end of run application, specify end of run panel (DU9R.).

For single sided application on back side of work surface, specify single sided boundary panel (DU9B.). Single sided boundary gallery panel (DU9x.B) does not work with Nevi™ Link.

When specifying 29″ gallery panel with inserts to be used with 17″-high fabric screen (Pari or flat edge), overall combined height will align with trough-mounted screens at 46″ high. Order 17″-high fabric screen separately.

Grain direction is vertical on veneer, wood-grain and directional laminates.

Wood-grain and directional laminates are not available on 66″-72″ wide gallery panels and are not a recommended application when using ZZ open line wood-grain or directional laminates.

Dimensions

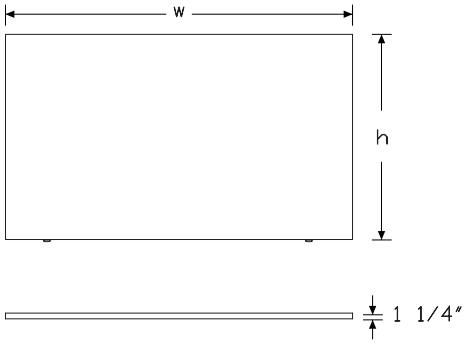

DU9R

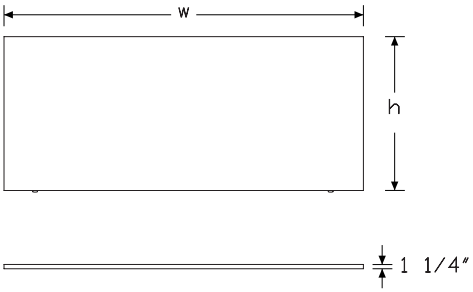

DU9B

Specification Information

Step 1.

DU9

Step 2. Edge

R.	end of run gallery panel
B.	single sided boundary gallery panel (along back edge)

Step 3. Width

For end of run gallery panel (R.)

24	24″ wide - front edge to back edge for single sided bench
30	30″ wide - front edge to back edge for single sided bench
48	48″ wide - front edge to front edge for 24″ deep back to back
60	60″ wide - front edge to front edge for 30″ deep back to back

For single sided boundary gallery panel (along back edge) (B.)

48	48″ wide
54	54″ wide
60	60″ wide
66	66″ wide
72	72″ wide

Step 4. Height

29	29″ tall
46	29″ tall with inserts to be used with 17″ tall fabric screens (Pari or Flat Edge)

Step 5. Surface Material

L	high-pressure laminate top/thermoplastic edge
W	veneer top/veneer edge
U	high-pressure laminate/universal edge

Prices for Steps 1-5.

			L	W	U
DU9R.	**24**	**29**	$356	812	356
		46	$451	906	451
	30	**29**	$469	1023	469
		46	$564	1117	564
	48	**29**	$745	1588	745
		46	$841	1684	841
	60	**29**	$955	2020	955
		46	$1060	2114	1060

			L	W	U
DU9B.	**54**	**29**	$999	2040	970
		46	$1107	2140	1043
	48	**29**	$853	1735	829
		46	$964	1840	937
	60	**29**	$1094	2238	1064
		46	$1209	2344	1174
	66	**29**	$1264	2568	1226
		46	$1372	2676	1334
	72	**29**	$1401	2857	1362
		46	$1512	2965	1467

Step 6.

Surface Finish

For 24″ wide - front edge to back edge for single sided bench (24), 48″ wide (48), 30″ wide - front edge to back edge for single sided bench (30), 54″ wide (54), 48″ wide - front edge to front edge for 24″ deep back to back (48), 60″ wide (60), or 60″ wide - front edge to front edge for 30″ deep back to back (60) with high-pressure laminate top/thermoplastic edge (L), or high-pressure laminate/universal edge (U)

125	natural maple (CP)	+$0
126	natural cherry (CP)	+$0
127	walnut (CP)	+$0
139	light ash (CP)	+$0
140	warm ash (CP)	+$0
76	light brown walnut	+$0
8Q	folkstone grey (CP)	+$0
91	white (CP)	+$0
98	studio white (CP)	+$0
CL	cool grey neutral	+$0
HF	inner tone light	+$0
HP	light anigre	+$0
LBA	clear on ash (CP)	+$0
LBB	oak on ash (CP)	+$0
LBC	walnut on ash (CP)	+$0
LBF	neutral twill	+$0
LBJ	graphite twill	+$0
LBQ	white twill	+$0
LBR	phantom ecru	+$0
LBS	phantom cocoa	+$0
LBU	medium matte walnut (CP)	+$0
LBV	warm grey teak	+$0
LT	light tone	+$0
LU	soft white	+$0
WL	warm stone (CP)	+$0
WN	warm grey neutral	+$0

Surface Finish

For 66″ wide (66) or 72″ wide (72) with high-pressure laminate top/ thermoplastic edge (L), or high-pressure laminate/universal edge (U)

8Q	folkstone grey (CP)	+$0
91	white (CP)	+$0
98	studio white (CP)	+$0
CL	cool grey neutral	+$0
LU	soft white	+$0
WL	warm stone (CP)	+$0
WN	warm grey neutral	+$0

Surface/Edge Finish

For veneer top/veneer edge (W)

2U	light brown walnut	+$85
40	dark brown walnut	+$85
CHD	noble cherry	+$85
ET	clear on ash	+$85
EU	oak on ash	+$85
EV	walnut on ash	+$85
EW	medium matte walnut	+$85
UL	natural maple	+$85
WHN	natural white oak	+$85

Step 7. Edge Finish

For high-pressure laminate top/thermoplastic edge (L)

125	natural maple (CP)	+$0
126	natural cherry (CP)	+$0
127	walnut (CP)	+$0
139	light ash (CP)	+$0
140	warm ash (CP)	+$0
76	light brown walnut	+$0
8Q	folkstone grey (CP)	+$0
91	white (CP)	+$0
98	studio white (CP)	+$0
CL	cool grey neutral	+$0
G1	graphite (CP)	+$0
HF	inner tone light	+$0
HP	light anigre	+$0
LBA	clear on ash (CP)	+$0
LBB	oak on ash (CP)	+$0
LBC	walnut on ash (CP)	+$0
LBF	neutral twill	+$0
LBJ	graphite twill	+$0
LBQ	white twill	+$0
LBR	phantom ecru	+$0
LBS	phantom cocoa	+$0
LBU	medium matte walnut (CP)	+$0
LBV	warm grey teak	+$0
LU	soft white	+$0
UBK	ultra black (CP)	+$0
WL	warm stone (CP)	+$0
WN	warm grey neutral	+$0

For high-pressure laminate/universal edge (U)

PLY	plywood edge	+$50

Step 8. Bracket Finish

Metallic Paint

611	beige mist metallic (CP)	+$0
613	silver (CP)	+$0
SNA	satin aluminum	+$10
SNB	satin bronze	+$10
SNC	satin carbon	+$10

Sand Texture Paint

BK	black	+$0
UBK	ultra black (CP)	+$0

Smooth Paint		
8Q	folkstone grey (CP)	+$0
91	white (CP)	+$0
98	studio white (CP)	+$0
G1	graphite (CP)	+$0
WL	warm stone (CP)	+$0
WN	warm grey neutral	+$0

Connect™-Power Entry, 4-Circuit DU1351

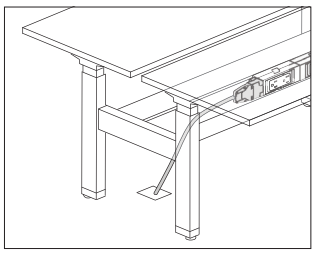

Product Information

Description

This power entry connects a building's electrical from a wall, floor, or column to the end of a 4-circuit junction block and distributes up to 4 20-amp circuits. UL Listed for use with Renew™ Link and Nevi™ Link in the US and Canada.

Notes

Renew Link modular power products are only compatible with other Renew Link modular products, or with Connect™ 4-circuit modular components. Note that the UL listing for Renew Link is no longer applicable when connecting Renew Link power to Connect power.

Power entry can be field cut to the appropriate length.

For San Francisco, specify ⅜″ flex metallic conduit option (C).

Finish color on liquid tight conduit is black. Finish color on metallic conduit is silver.

A licensed electrician must wire the power entry to the building's electrical system.

Dimensions

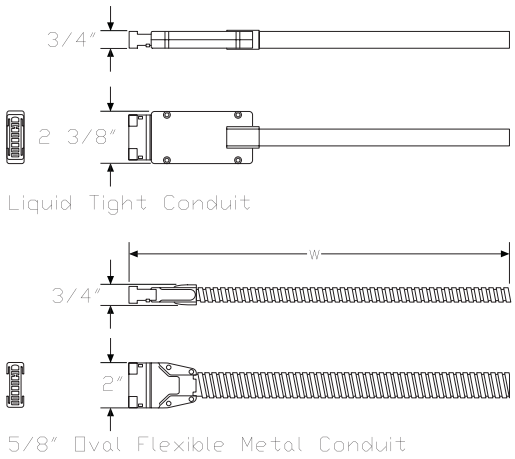

Specification Information

Step 1.

DU1351.

Step 2. Length

06	6′ long
12	12′ long
18	18′ long
24	24′ long

Step 3. Conduit Type

L	liquid tight conduit
C	⅜″ flex metallic conduit

Prices for Steps 1-3.

		L	C
DU1351.	**06**	$306	306
	12	$438	438
	18	$580	570
	24	$730	730

Connect™-Power Entry, 4-Circuit, New York City DU1352

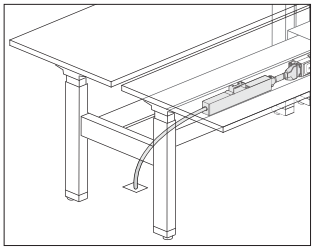

Product Information

Description

This power entry connects a building's electrical from a wall, floor, or column to the end of a 4-circuit junction block and distributes up to 4 20-amp circuits. It includes a junction box and harness. It is UL Listed for use with Renew™ Link and Nevi™ Link in the US and Canada.

Notes

Renew Link modular power products are only compatible with other Renew Link modular products, or with Connect™ 4-circuit modular components. Note that the UL listing for Renew Link is no longer applicable when connecting Renew Link power to Connect power.

Power entry comes with an 8″ harness.

A licensed electrician must wire the power entry to the building's electrical system.

For linear bench sections, the NYC Power Entry (DU1352.08) can only fit, and must be installed in, 60″-wide and wider sections. For 120° bench sections, the NYC Power Entry (DU1352.08) can only fit, and must be installed in, 54″-wide and wider sections.

Dimensions

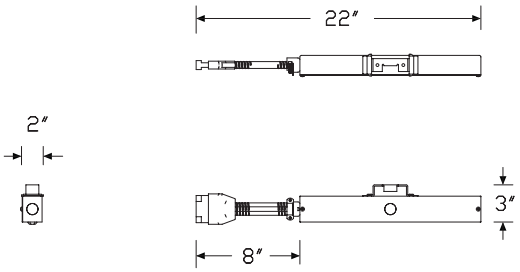

Specification Information

Step 1.

DU1352.08	$482

Connect™-Junction Block to Junction Block Jumper, 4-Circuit DU1353

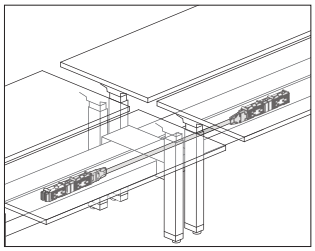

Product Information

Description

This adjustable power jumper distributes up to 4 20-amp circuits between 2 junction blocks. One end of the jumper extends an additional 3″ when connecting to an adjacent junction block. It is UL Listed for use with Renew™ Link and Nevi™ Link in the US and Canada.

Notes

Renew Link modular power products are only compatible with other Renew Link modular products, or with Connect™ 4-circuit modular components. Note that the UL listing for Renew Link is no longer applicable when connecting Renew Link power to Connect power.

Finish on 5/8″ oval metallic conduit is silver.

Dimensions

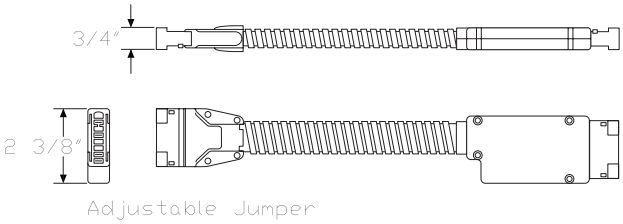

Specification Information

Step 1.

DU1353.

Step 2. Width

24	24″ wide
30	30″ wide
36	36″ wide
42	42″ wide
48	48″ wide
54	54″ wide
60	60″ wide

Step 3. Type

A	adjustable jumper

Prices for Steps 1-3.

		A
DU1353.	**24**	$181
	30	$197
	36	$211
	42	$220
	48	$224
	54	$246
	60	$255

Connect™-Block Connector, 4-Circuit DU1354

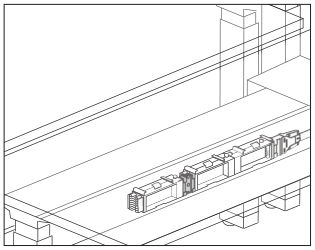

Product Information

Description

This connector connects 2 junction blocks together. Finish is black. Attachment hardware included. It is UL Listed for use with Renew™ Link and Nevi™ Link in the US and Canada.

Notes

Renew Link modular power products are only compatible with other Renew Link modular products, or with Connect™ 4-circuit modular components. Note that the UL listing for Renew Link is no longer applicable when connecting Renew Link power to Connect power.

Dimensions

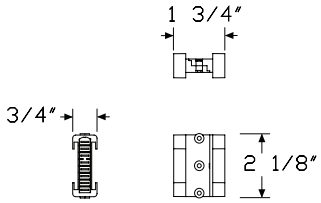

Short Receptacle-to-Receptacle Block Connector

Specification Information

Step 1.

DU1354.S	$98

Connect™-Junction Block, 4-Circuit DU1358

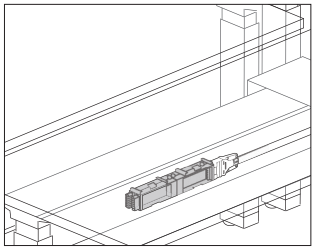

Product Information

Description

This junction block attaches to the electrical cross bar and accepts 4-circuit receptacles for access and distribution of up to 4 20-amp circuits. It has connection points at both ends for attaching a power entry, a 4-circuit power jumper, or block-to-block connector. Finish is black. It is UL Listed for use with Renew™ Link and Nevi™ Link in the US and Canada. Attachment bracket and hardware included.

Notes

Renew Link modular power products are only compatible with other Renew Link modular products, or with Connect™ 4-circuit modular components. Note that the UL listing for Renew Link is no longer applicable when connecting Renew Link power to Connect power.

For back-to-back applications, specify the 2-duplex block (DU1358.DB) or the 1-duplex block (DU1358.SB).

Order duplex receptacle, 4-circuit (DU1355.) separately.

To route power from building to junction block, order 4-circuit power entry (DU1351. or DU1352.) separately.

To route power between junction blocks, order junction block to junction block jumper (DU1353.) separately.

To connect 2 junction blocks together, order a short block to block connector (DU1354.S) separately.

Dimensions

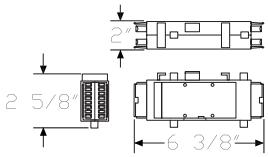

Single, Back-to-Back Junction Block

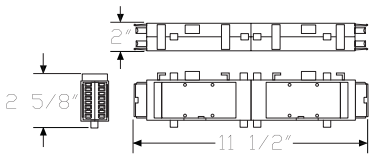

Double, Back-to-Back Junction Block

Specification Information

Step 1.

DU1358.

Step 2. Junction Block Type

SB single back-to-back junction block

DB double back-to-back junction block

Step 3. Attachment Hardware

B short 90° attachment to underside of surface

Prices for Steps 1-3.

		B
DU1358.	**SB**	$191
	DB	$159

Connect™-Duplex Receptacle, 4-Circuit

DU1355

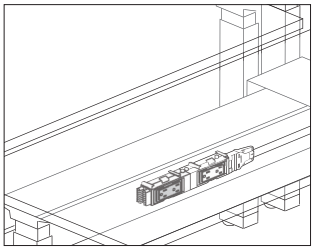

Product Information

Description

This 15- or 20-amp duplex receptacle attaches to a junction block to provide electrical access. Finish is black. Package of 1. It is UL Listed for use with Renew™ Link and Nevi™ Link in the US and Canada.

Notes

Renew Link modular power products are only compatible with other Renew Link modular products, or with Connect™ 4-circuit modular components. Note that the UL listing for Renew Link is no longer applicable when connecting Renew Link power to Connect power.

Receptacle is labeled as I, II, III, or IV for circuit identification.

Order junction block (DU1358.) separately.

Dimensions

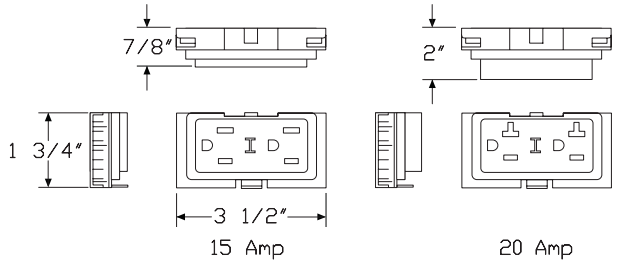

Specification Information

Step 1.

DU1355.

Step 2. Amps

15	15 amp
20	20 amp

Step 3. Circuit

1	circuit I
2	circuit II
3	circuit III
4	circuit IV

Prices for Steps 1-3.

		1	2	3	4
DU1355.	**15**	$50	50	50	50
	20	$60	60	60	60

Logic Mini Y1414.

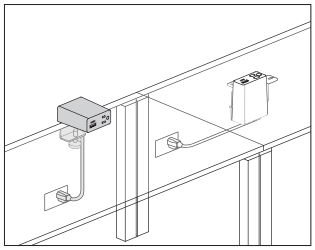

Product Information

Description

This electrical distributor plugs directly into floor, wall, or ceiling drop outlets. Each module configuration presents the same visual appearance. Grommet mount attachment does not come with the mini grommet (order separately as needed). Cable clips and attachment hardware included. Product is UL listed.

Notes

Grommet mount attachment (Y1414.xxxG) does not come with the mini grommet. Order Logic mini grommet (Y1412.) separately, as needed.

Cable clips for cord management are intended for a 1-time installation.

Clamp versions can be reoriented in the field by a technician.

USB ports provide a combined 20 watts of power to charge most devices and tablets at full speed. USB-C provides 15 watts of power and USB-A provides 10 watts of power individually. When using the USB-C and USB-A ports simultaneously, USB-C remains at 15 watts and USB-A reduces to 5 watts.

Cord color is predetermined. For white (91) finish cords will be white. For graphite (G1) finish cords will be black.

Grommet mount attachment (Y1414.xxxG) does not come with the mini grommet. Order Logic mini grommet (Y1412.) separately, as needed.

Dimensions

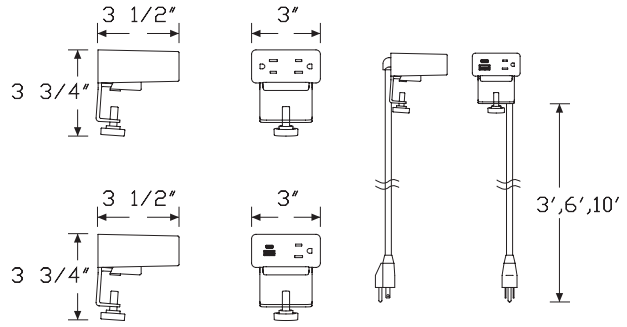

Surface Clamp

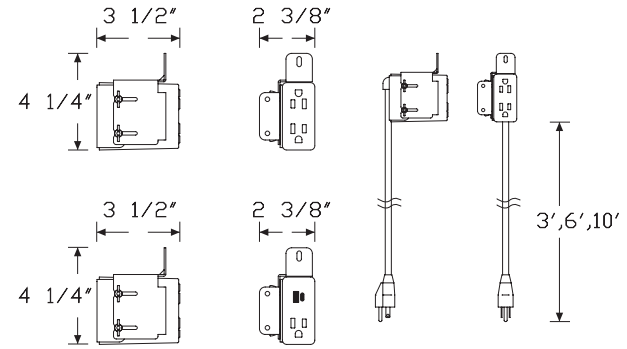

Grommet Mount

Specification Information

Step 1.

Y1414.

Step 2. Configuration

L	1 simplex receptacles, 1 powered USB A/C Combo
K	2 simplex receptacles

Step 3. Cord/Conduit Length

03	3′ cord/conduit
06	6′ cord/conduit
10	10′ cord/conduit

Step 4. Attachment

G	grommet mount
S	surface clamp

Prices for Steps 1-4.

			G	S
Y1414.	**L**	**03**	$471	471
		06	$471	471
		10	$483	483
	K	**03**	$264	264
		06	$264	264
		10	$278	278

Step 5. Finish

BK	black [A]	+$0
UBK	ultra black (CP)	+$0
91	white (CP) [A]	+$0
98	studio white (CP) [A]	+$0
G1	graphite (CP) [A]	+$0

Logic Mini Grommet Y1412.

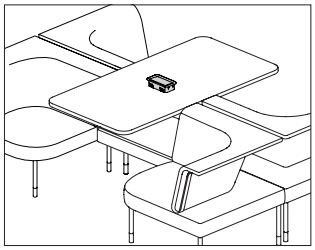

Product Information

Description

This Logic Power Access Solutions™ plastic grommet is available in mini rectangle or mini square configuration. The integrated flaps can hide the things below the surface while also retaining power and data cords.

Notes

This grommet is installed in some HermanMiller applications. Verify your application before ordering grommet separately.

Dimensions

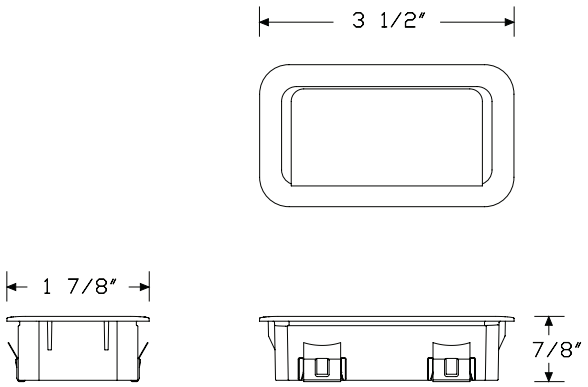

Grommet - Rectangle

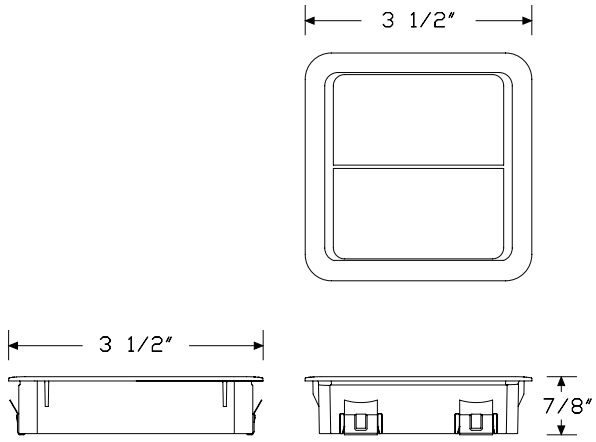

Grommet - Square

Specification Information

Step 1.

Y1412.

Step 2. Configuration

1	mini rectangle grommet
2	mini square grommet

Prices for Steps 1-2.

Y1412.	**1**	$42
	2	$47

Step 3. Finish

91	white (CP)	+$0
98	studio white (CP)	+$0
BK	black	+$0
G1	graphite (CP)	+$0
UBK	ultra black (CP)	+$0

External Cable Manager

DU11B.
DU11S.

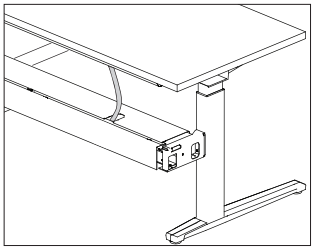

Product Information

Description

This cable manager seamlessly routes cables from the central trough of height adjustable benching (Renew™ Link or Nevi™ Link) up to the work surface as the surface moves up and down. 1 length fits all leg mechanism types. Installation hardware included.

Dimensions

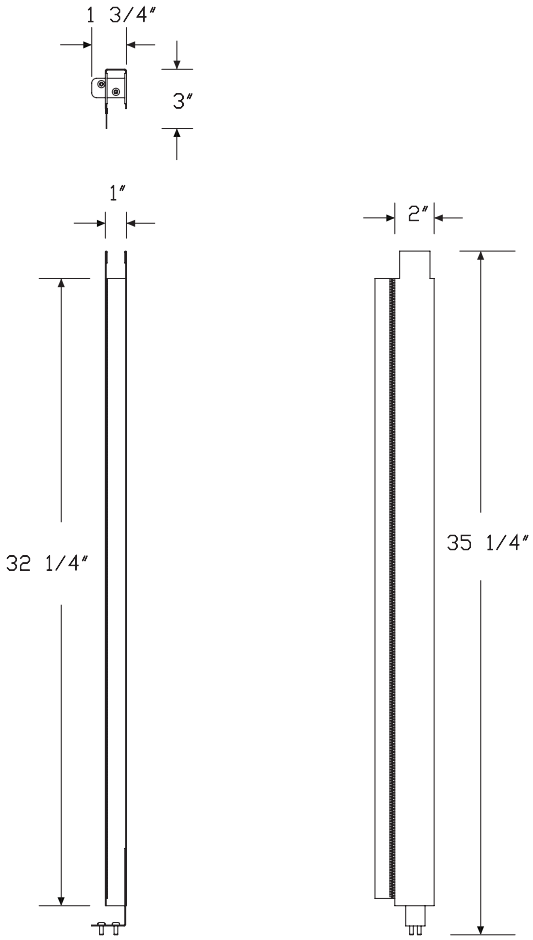

Specification Information

Step 1.

DU11

Step 2. Attachment

B. high density trough attachment
S. worksurface attachment

Prices for Steps 1-2.	
DU11B.	$282
DU11S.	$282

Step 3. Finish	
Price Category 4	+$0
Price Category 5	+$0

Hinged Cable Trough Y1300.

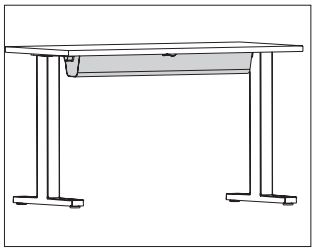

Product Information

Description

This sheet metal trough is a stand-alone cable management tray that mounts to the underside of a work surface to hold and conceal cords and cables. It can be used with a Logic Mini unit for cord storage or used alone with cords routed through the ends of the trough. Trough holds cords in place when open.

Notes

Power strip (Y1500.) is intended to be housed inside the trough for additional power access.

Hinged cable trough works best with a Motia® Vista™ height adjustable table (DV6GT.). Can be used on any other work surface that has the clearance for the overall dimensions listed below.

When specifying a 24"D×54"W table with legs inbound for under surface storage on both ends (2) option, the hinged cable trough option is not available. It is recommended to use the (Y1200.48N) cable trough, ordered separately.

Order the following products separately:

- Power strip (Y1500.)
- Logic Mini (Y1414., Y1412.)

Dimensions

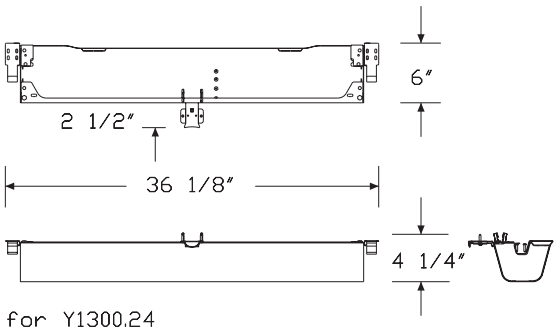

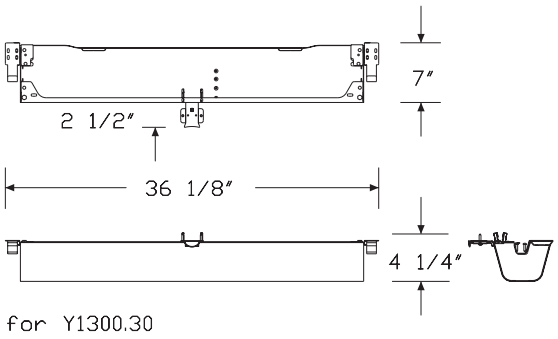

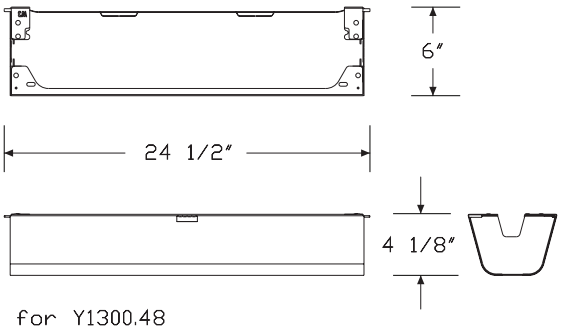

Specification Information

Step 1.

Y1300. A

Step 2. Work Surface Depth

24	for use with 24″ deep work surface A
30	for use with 30″ deep work surface A
48	for use with a 24″ or 30″ deep x 48″ wide Motia C-Leg Table A

Prices for Steps 1-2.

Y1300.	**24**	$261
	30	$283
	48	$245

Step 3. Finish

Smooth Paint

8Q	folkstone grey (CP) A	+$0
91	white (CP) A	+$0
98	studio white (CP) A	+$0
CL	cool grey neutral A	+$0
WL	warm stone (CP) A	+$0
WN	warm grey neutral A	+$0

Sand Texture Paint

BK	black A	+$0
G1	graphite (CP) A	+$0

Metallic Paint

SNB	satin bronze A	+$0
EH	metallic bronze A	+$0

Cable Management Channel FT19C.

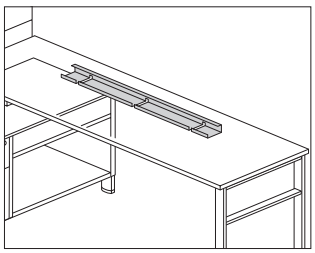

Product Information

Description

This channel attaches to the underside of a surface to hold and manage cords and cables. Attachment hardware included.

Dimensions

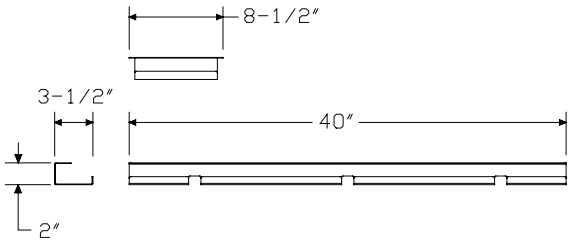

Specification Information

Step 1.

FT19C. A

Step 2. Width

08	8″ wide A
40	40″ wide A

Prices for Steps 1-2.

FT19C.	**08**	$62
	40	$110

Cable Management Trough FT199.

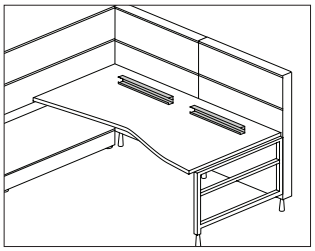

Product Information

Description

This trough attaches along the underside of a Canvas surface to hold and manage power/data cables. It includes two 14″-wide troughs. Finish is black. Attachment hardware is included.

Dimensions

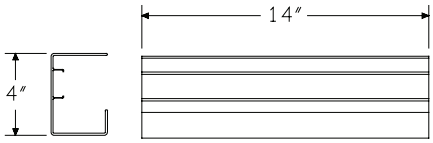

Specification Information

Step 1.

FT199.	$102

Cable Manager FV695.

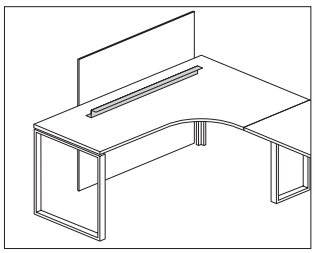

Product Information

Description

This cable manager attaches beneath a surface to provide routing of cables and cords at the back edge of a desk or return. Attachment hardware included.

Notes

When using cable manager with privacy panel or screen, specify cable manager width 12″ less than privacy panel or screen width.

Dimensions

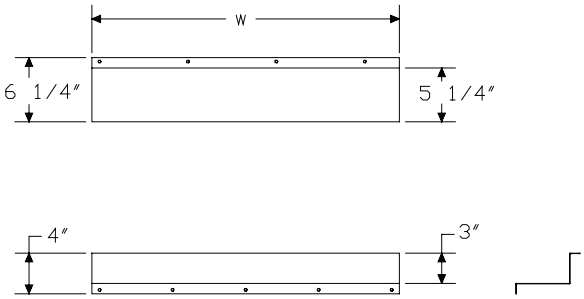

Specification Information

Step 1.

FV695.

Step 2. Width

18	18″ wide
24	24″ wide
30	30″ wide
36	36″ wide
42	42″ wide
48	48″ wide

Prices for Steps 1-2.

FV695.	**18**	$110
	24	$116
	30	$126
	36	$134
	42	$145
	48	$158

Step 3. Surface Finish

Sand Texture Paint

UBK	ultra black (CP)	+$0
8Q	folkstone grey (CP)	+$0
91	white (CP)	+$0
98	studio white (CP)	+$0
BK	black	+$0
CL	cool grey neutral	+$0
G1	graphite (CP)	+$0
WL	warm stone (CP)	+$0
WN	warm grey neutral	+$0

Metallic Paint

611	beige mist metallic (CP)	+$0
613	silver (CP)	+$0
EH	metallic bronze	+$0
SNA	satin aluminum	+$10
SNB	satin bronze	+$10
SNC	satin carbon	+$10

Cable Management Trough, Work Surface Suspended

AO382.

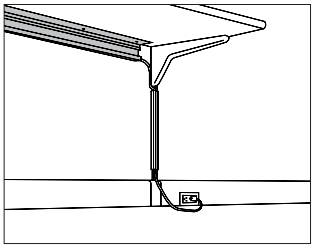

Product Information

Description

This trough attaches under an Action Office® suspended work surface to manage cables. Attachment hardware is included.

Dimensions

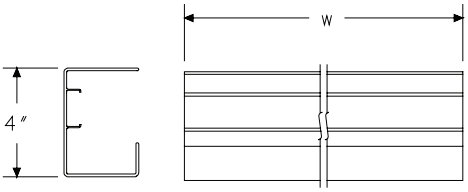

Specification Information

Step 1.

AO382.

Step 2. Width

30	30″ wide
40	40″ wide

Prices for Steps 1-2.

AO382.	**30**	$123
	40	$151

Step 3. Surface Finish

UBK	ultra black (CP)	+$0
MT	medium tone	+$0

Height-Adjustable Vertical Cable Manager

DU15B.
DU15S.

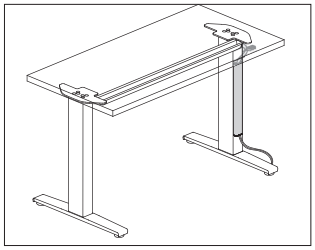

Product Information

Description

This cable manager organizes cords from the power source to the underside of a worksurface on height-adjustable products. It attaches with magnets to the height-adjustable leg column and the mesh sleeve travels up and down with the worksurface. Cable manager is compatible with all height-adjustable leg columns. Installation hardware included.

Dimensions

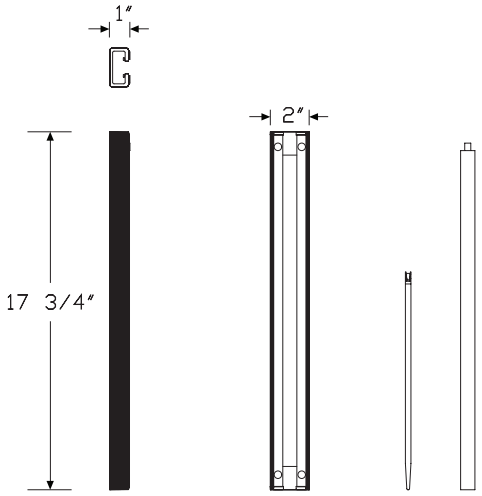

Specification Information

Step 1.

DU15 A

Step 2. Attachment

B.	cable tray attachment A
S.	worksurface attachment A

Step 3. Table Mechanism

D	electric extended range
E	electric standard range

Prices for Steps 1-3.

DU15B.	**D**	$169
	E	$169
DU15S.	**D**	$176
	E	$176

Step 4. Finish

613	silver (CP)	+$0
UBK	ultra black (CP)	+$0
BK	black	+$0
91	white (CP)	+$0

Renew™ Link Sit-to-Stand Bench

Renew Link Back-to-Back Rectangular Height Adjustable Bench

DU2AS.
DU2AT.

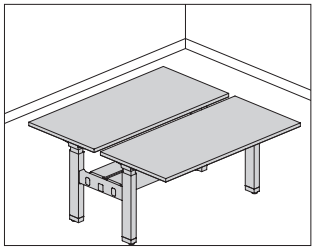

Product Information

Description

This rectangular back-to-back bench is a 2-workstation unit that can be used in back-to-back height adjustable benching applications in series with other Renew™ Link back-to-back benches to create a run. Each workstation has a C-leg configuration, comes in multiple edge styles, and has options for laminate top with thermoplastic edge, laminate top with universal edge, veneer top and edge, or painted Formcoat® top and edge. There are multiple height adjustment, wire management, and switch options. Glides have ½″ of leveling adjustment. Shipped knocked down. Product is UL Listed.

Each table can be specified with a different height adjustment mechanism. Floor to top of surface height adjustment ranges are 27″-46″ for the electric standard range (E) option, 22″-48″ for the electric extended range (D) option, and 28½″ for the fixed height table (F).

Notes

To power bench applications, specify the following components separately:

- Power entry (DU1351.)
- Power entry, New York City (DU1352.)
- Junction block to Junction block jumper (DU1353.)
- Duplex receptacle (DU1355.)
- Junction block (DU1358.DBB)

Sizes listed for table depth and width are nominal. Depth of surface is reduced 1″ for cord management. Width of surface is reduced 1″ to minimize possible pinch point hazards between benches.

Simple cable cover (PSC) is facility installed only.

High density cable trough (PHD) can be accessed by users for daily cord management. Available on 30″ deep tables only.

Power access cutouts are specifically sized for 5 wide and 6 wide Logic G1000 grommet mounted electrical distributors (Y1425.).

For linear bench sections, the NYC Power Entry (DU1352.08) can only fit, and must be installed in, 60″-wide and wider sections. For 120° bench sections, the NYC Power Entry (DU1352.08) can only fit, and must be installed in, 54″-wide and wider sections.

MicrobeCare™ is an antimicrobial coating that can be applied to a wide variety of Herman Miller Group surfaces to protect products from mold, mildew, algae, and bacteria that cause deterioration, discoloration, odors, and stains.

MicrobeCare™ is a US Environmental Protection Agency (EPA) registered nonpublic health antimicrobial.

Dimensions

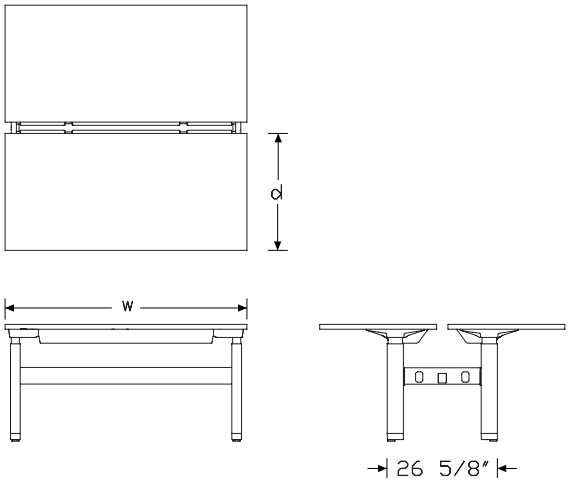

Specification Information

Step 1.

DU2A

Step 2. Edge

S. squared-edge
T. thin-edge

Step 3. Depth

24 24″ deep (23″ surface size)
30 30″ deep (29″ surface size)

Step 4. Width

48 48″ wide (47″ surface size)
54 54″ wide (53″ surface size)
60 60″ wide (59″ surface size)
66 66″ wide (65″ surface size)
72 72″ wide (71″ surface size)

Step 5. Surface Material

For squared-edge (S.)

J thermally-fused laminate top/thermoplastic edge with MicrobeCare™
K thermally-fused laminate top/universal edge with MicrobeCare™
M thermally-fused laminate top/thermoplastic edge
T thermally-fused laminate top/universal edge
L high-pressure laminate top/thermoplastic edge
W veneer top/veneer edge
P painted Formcoat® top/edge
U high-pressure laminate/universal edge
A high-pressure laminate top/thermoplastic edge with MicrobeCare™ [A]
C high-pressure laminate top/universal edge with MicrobeCare™ [A]

For thin-edge (T.)

L high-pressure laminate top/thermoplastic edge
W veneer top/veneer edge
P painted Formcoat® top/edge
A high-pressure laminate top/thermoplastic edge with MicrobeCare™ [A]

Step 6. Height Adjustable Table 1

E electric standard range
D electric extended range
F fixed table

Step 7. Height Adjustable Table 2

For electric standard range (E)

E electric standard range
D electric extended range
F fixed table

For electric extended range (D)

D electric extended range
F fixed table

For fixed table (F)

F fixed table

Prices for Steps 1-7.

		JEE	JED	JEF	JDD	JDF	JFF
DU2AS. 24	**48**	$8149	8977	6465	10941	10954	4779
	54	$8338	9199	6657	11214	11509	4967
	60	$8524	9386	6839	11428	11737	5152
	66	$8429	9348	6741	11470	12095	5055
	72	$8603	9567	6917	11750	12398	5229
30	**48**	$8402	9158	6715	11074	11360	5028
	54	$8546	9366	6863	11363	11666	5175
	60	$8676	9554	6989	11630	11953	5306
	66	$8534	9486	6851	11656	12298	5162
	72	$8674	9701	6987	11958	12618	5303

		KEE	KED	KEF	KDD	KDF	KFF
DU2AS. 24	**48**	$8149	8977	6465	10941	10954	4779
	54	$8338	9199	6657	11214	11269	4967
	60	$8524	9386	6839	11428	11513	5152
	66	$8429	9348	6741	11470	11602	5055
	72	$8603	9567	6917	11750	11924	5229
30	**48**	$8402	9158	6715	11074	11108	5028
	54	$8546	9366	6863	11363	11436	5175
	60	$8676	9554	6989	11630	11744	5306
	66	$8534	9486	6851	11656	11816	5162
	72	$8674	9701	6987	11958	12162	5303

		MEE	MED	MEF	MDD	MDF	MFF
DU2AS. 24	**48**	$7951	8778	6264	10742	10757	4579
	54	$8142	9001	6457	11015	11310	4769
	60	$8325	9189	6639	11232	11539	4955
	66	$8230	9148	6543	11271	11897	4857
	72	$8406	9367	6719	11553	12199	5030

30	48	$8203	8960	6516	10876	11161	4830
	54	$8348	9169	6663	11165	11467	4975
	60	$8478	9354	6792	11431	11752	5106
	66	$8335	9288	6652	11457	12098	4964
	72	$8475	9501	6790	11761	12420	5103

		TEE	TED	TEF	TDD	TDF	TFF
DU2AS. 24	48	$7951	8778	6264	10742	10757	4579
	54	$8142	9001	6457	11015	11071	4769
	60	$8325	9189	6639	11232	11316	4955
	66	$8230	9148	6543	11271	11403	4857
	72	$8406	9367	6719	11553	11726	5030
30	48	$8203	8960	6516	10876	10910	4830
	54	$8348	9169	6663	11165	11238	4975
	60	$8478	9354	6792	11431	11546	5106
	66	$8335	9288	6652	11457	11617	4964
	72	$8475	9501	6790	11761	11963	5103

		LEE	LED	LEF	LDD	LDF	LFF
DU2AS. 24	48	$8072	8911	6360	10904	10918	4648
	54	$8265	9137	6553	11182	11481	4841
	60	$8452	9328	6739	11402	11713	5030
	66	$8355	9287	6642	11441	12077	4931
	72	$8534	9509	6821	11727	12384	5107
30	48	$8328	9096	6615	11041	11328	4904
	54	$8474	9308	6765	11333	11641	5051
	60	$8606	9496	6895	11604	11929	5183
	66	$8462	9428	6752	11630	12281	5039
	72	$8603	9644	6893	11938	12609	5180

		WEE	WED	WEF	WDD	WDF	WFF
DU2AS. 24	48	$9757	10749	8067	13103	13460	6379
	54	$9982	11013	8297	13437	13834	6608
	60	$10205	11240	8520	13691	14132	6826
	66	$10150	11250	8460	13797	14296	6774
	72	$10358	11516	8671	14136	14682	6983
30	48	$10056	10966	8369	13266	13642	6680
	54	$10233	11216	8544	13611	14038	6858
	60	$10389	11440	8701	13932	14405	7013
	66	$10275	11419	8590	14025	14552	6900
	72	$10443	11677	8755	14389	14969	7069

		PEE	PED	PEF	PDD	PDF	PFF
DU2AS. 24	48	$8734	9639	6963	11783	11869	5191
	54	$8946	9881	7168	12083	12210	5395
	60	$9144	10084	7369	12315	12479	5598
	66	$9053	10055	7278	12373	12589	5509
	72	$9242	10295	7470	12679	12941	5698
30	48	$9006	9836	7237	11928	12035	5464
	54	$9168	10064	7397	12245	12398	5622
	60	$9309	10268	7538	12535	12732	5765
	66	$9168	10208	7397	12577	12822	5622
	72	$9319	10443	7547	12906	13201	5775

		UEE	UED	UEF	UDD	UDF	UFF
DU2AS. 24	48	$8072	8911	6360	10904	10918	4648
	54	$8265	9137	6553	11182	11239	4841
	60	$8452	9328	6739	11402	11487	5030
	66	$8355	9287	6642	11441	11576	4931
	72	$8534	9509	6821	11727	11903	5107
30	48	$8328	9096	6615	11041	11075	4904
	54	$8474	9308	6765	11333	11408	5051
	60	$8606	9496	6895	11604	11720	5183
	66	$8462	9428	6752	11630	11793	5039
	72	$8603	9644	6893	11938	12143	5180

		AEE	AED	AEF	ADD	ADF	AFF
DU2AS. 24	48	$8231	9068	6531	11051	11064	4827
	54	$8423	9292	6724	11327	11625	5018
	60	$8610	9481	6908	11544	11856	5204
	66	$8514	9443	6809	11585	12217	5106
	72	$8690	9664	6987	11868	12522	5282
30	48	$8487	9251	6783	11186	11475	5079
	54	$8633	9461	6932	11478	11784	5228
	60	$8764	9651	7060	11748	12073	5360
	66	$8621	9582	6920	11773	12421	5214
	72	$8762	9799	7058	12078	12746	5356

		CEE	CED	CEF	CDD	CDF	CFF
DU2AS. 24	48	$8231	9068	6531	11051	11064	4827
	54	$8423	9292	6724	11327	11382	5018
	60	$8610	9481	6908	11544	11629	5204
	66	$8514	9443	6809	11585	11720	5106
	72	$8690	9664	6987	11868	12044	5282
30	48	$8487	9251	6783	11186	11220	5079
	54	$8633	9461	6932	11478	11551	5228
	60	$8764	9651	7060	11748	11862	5360
	66	$8621	9582	6920	11773	11935	5214
	72	$8762	9799	7058	12078	12284	5356

		LEE	LED	LEF	LDD	LDF	LFF
DU2AT. 24	**48**	$8968	9891	7234	12080	12242	5497
	54	$9180	10141	7445	12391	12596	5711
	60	$9385	10349	7650	12631	12871	5916
	66	$9302	10329	7571	12698	12993	5834
	72	$9499	10577	7766	13011	13354	6031
30	**48**	$9248	10094	7511	12234	12418	5777
	54	$9413	10326	7679	12553	12786	5942
	60	$9556	10534	7818	12853	13127	6086
	66	$9427	10488	7693	12907	13233	5956
	72	$9581	10724	7846	13247	13619	6109

		WEE	WED	WEF	WDD	WDF	WFF
DU2AT. 24	**48**	$10870	11968	9153	14575	15111	7431
	54	$11123	12264	9404	14939	15532	7687
	60	$11368	12514	9649	15224	15854	7930
	66	$11332	12549	9611	15370	16062	7893
	72	$11563	12844	9845	15742	16490	8125
30	**48**	$11206	12210	9488	14752	15318	7769
	54	$11398	12486	9677	15135	15752	7959
	60	$11569	12732	9851	15491	16161	8132
	66	$11477	12734	9759	15616	16348	8037
	72	$11659	13020	9942	16018	16806	8221

		PEE	PED	PEF	PDD	PDF	PFF
DU2AT. 24	**48**	$9749	10682	7942	13116	13365	6138
	54	$9977	11015	8173	13453	13748	6367
	60	$10196	11242	8393	13708	14042	6588
	66	$10124	11232	8322	13795	14189	6514
	72	$10337	11499	8531	14139	14580	6727
30	**48**	$10051	10966	8244	13282	13550	6441
	54	$10230	11218	8423	13626	13950	6618
	60	$10386	11443	8579	13951	14318	6775
	66	$10255	11405	8449	14025	14450	6643
	72	$10422	11663	8616	14388	14865	6811

		AEE	AED	AEF	ADD	ADF	AFF
DU2AT. 24	**48**	$9166	10093	7434	12281	12444	5696
	54	$9381	10340	7646	12590	12798	5911
	60	$9586	10549	7851	12831	13070	6117
	66	$9504	10528	7771	12900	13194	6033
	72	$9699	10777	7965	13214	13555	6230
30	**48**	$9448	10293	7712	12433	12618	5978
	54	$9613	10526	7878	12753	12986	6140
	60	$9756	10736	8018	13055	13328	6286
	66	$9627	10688	7892	13108	13436	6156
	72	$9781	10926	8047	13447	13820	6311

Step 8. Central Cable Trough Tables 1 and 2

For 48" wide (47" surface size) (48), 54" wide (53" surface size) (54), or 60" wide (59" surface size) (60)

BCT	basic cable trough - data/power routing and cord management	+$100
ECT	enhanced cable trough w/covers - data/power routing and cord management	+$700

For 66" wide (65" surface size) (66) or 72" wide (71" surface size) (72)

BCT	basic cable trough - data/power routing and cord management	+$150
ECT	enhanced cable trough w/covers - data/power routing and cord management	+$900

Step 9. Switch Option

For fixed table (F) with fixed table (F)

SNN	no control	+$0

For electric standard range (E) or electric extended range (D) with fixed table (F)

SUD	simple up down	+$100
SRM	digital read out with memory	+$160

For electric standard range (E) or electric extended range (D) with electric standard range (E), or electric extended range (D)

SUD	simple up down	+$100
SRM	digital read out with memory	+$320

Step 10. Workstation Cord Cover/Cable Management Table 1 and 2

For 24" deep (23" surface size) (24)

PSC	simple cable	+$0

For 30" deep (29" surface size) (30)

PSC	simple cable	+$0
PHD	high density cable trough	+$549

Step 11. Power Access Cutout - Tables 1 and 2

For 24" deep (23" surface size) (24) or 30" deep (29" surface size) (30) with 48" wide (47" surface size) (48), 54" wide (53" surface size) (54), or 60" wide (59" surface size) (60), or 66" wide (65" surface size) (66), or 72" wide (71" surface size) (72) with simple cable (PSC)

NNN	no cutout	+$0

For 30″ deep (29″ surface size) (30) with 48″ wide (47″ surface size) (48) with high density cable trough (PHD)

NNN	no cutout	+$0

For 30″ deep (29″ surface size) (30) with 54″ wide (53″ surface size) (54) with high density cable trough (PHD)

NNN	no cutout	+$0
LAC	left cutout 6 port Y1425	+$45
RAC	right cutout 6 port Y1425	+$45
LC5	left cutout 5 port Y1425	+$45
RC5	right cutout 5 port Y1425	+$45

For 30″ deep (29″ surface size) (30) with 60″ wide (59″ surface size) (60), or 66″ wide (65″ surface size) (66), or 72″ wide (71″ surface size) (72) with high density cable trough (PHD)

NNN	no cutout	+$0
LAC	left cutout	+$45
RAC	right cutout	+$45
CAC	center cutout	+$45
LC5	left cutout 5 port Y1425	+$45
RC5	right cutout 5 port Y1425	+$45
CC5	center cutout 5 port Y1425	+$45

Step 12.

Top Finish

For high-pressure laminate top/thermoplastic edge (L), high-pressure laminate top/thermoplastic edge with MicrobeCare™ (A), high-pressure laminate/universal edge (U), or high-pressure laminate top/universal edge with MicrobeCare™ (C)

125	natural maple (CP)	+$0
126	natural cherry (CP)	+$0
127	walnut (CP)	+$0
139	light ash (CP)	+$0
140	warm ash (CP)	+$0
UBK	ultra black (CP)	+$0
76	light brown walnut	+$0
8Q	folkstone grey (CP)	+$0
91	white (CP)	+$0
98	studio white (CP)	+$0
CL	cool grey neutral	+$0
HF	inner tone light	+$0
HP	light anigre	+$0
LBA	clear on ash (CP)	+$0
LBR	phantom ecru	+$0
LBS	phantom cocoa	+$0
LBU	medium matte walnut (CP)	+$0
LBV	warm grey teak	+$0
LBB	oak on ash (CP)	+$0
LBC	walnut on ash (CP)	+$0
LBF	neutral twill	+$0
LBJ	graphite twill	+$0
LBQ	white twill	+$0
LT	light tone	+$0
LU	soft white	+$0
WL	warm stone (CP)	+$0
WN	warm grey neutral	+$0
X1	chalk white	+$0

Top Finish

For thermally-fused laminate top/thermoplastic edge with MicrobeCare™ (J), thermally-fused laminate top/universal edge with MicrobeCare™ (K), thermally-fused laminate top/thermoplastic edge (M), or thermally-fused laminate top/universal edge (T)

125	natural maple (CP)	+$0
126	natural cherry (CP)	+$0
127	walnut (CP)	+$0
139	light ash (CP)	+$0
140	warm ash (CP)	+$0
91	white (CP)	+$0
98	studio white (CP)	+$0
LBA	clear on ash (CP)	+$0
LBB	oak on ash (CP)	+$0
LBC	walnut on ash (CP)	+$0
LBF	neutral twill	+$0
LBQ	white twill	+$0
LBU	medium matte walnut (CP)	+$0
LU	soft white	+$0

Top/Edge Finish

For veneer top/veneer edge (W)

2U	light brown walnut	+$170
40	dark brown walnut	+$170
CHD	noble cherry	+$170
ET	clear on ash	+$170
EU	oak on ash	+$170
EV	walnut on ash	+$170
EW	medium matte walnut	+$170
UL	natural maple	+$170
WHN	natural white oak	+$170

Top/Edge Finish

For painted Formcoat® top/edge (P)

8Q	folkstone grey (CP)	+$0
91	white (CP)	+$0
LU	soft white	+$0

Step 13. Edge Finish

For thermally-fused laminate top/thermoplastic edge with MicrobeCare™ (J), thermally-fused laminate top/thermoplastic edge (M), high-pressure laminate top/thermoplastic edge (L), or high-pressure laminate top/thermoplastic edge with MicrobeCare™ (A)

125	natural maple (CP)	+$0
126	natural cherry (CP)	+$0
127	walnut (CP)	+$0
139	light ash (CP)	+$0
140	warm ash (CP)	+$0
G1	graphite (CP)	+$0
UBK	ultra black (CP)	+$0
76	light brown walnut	+$0
8Q	folkstone grey (CP)	+$0
91	white (CP)	+$0
98	studio white (CP)	+$0
CL	cool grey neutral	+$0
HF	inner tone light	+$0
HP	light anigre	+$0
LBA	clear on ash (CP)	+$0
LBR	phantom ecru	+$0
LBS	phantom cocoa	+$0
LBU	medium matte walnut (CP)	+$0
LBV	warm grey teak	+$0
LBB	oak on ash (CP)	+$0
LBC	walnut on ash (CP)	+$0
LBF	neutral twill	+$0
LBJ	graphite twill	+$0
LBQ	white twill	+$0
LT	light tone	+$0
LU	soft white	+$0
SG	slate grey	+$0
WL	warm stone (CP)	+$0
WN	warm grey neutral	+$0
X1	chalk white	+$0

For thermally-fused laminate top/universal edge with MicrobeCare™ (K), thermally-fused laminate top/universal edge (T), high-pressure laminate/universal edge (U), or high-pressure laminate top/universal edge with MicrobeCare™ (C)

PLY	plywood edge	+$50

Step 14. Base Finish		
Metallic Paint		
611	beige mist metallic (CP)	+$0
613	silver (CP)	+$0
SNA	satin aluminum	+$60
SNB	satin bronze	+$60
SNC	satin carbon	+$60
Sand Texture Paint		
BK	black	+$0
UBK	ultra black (CP)	+$0
Smooth Paint		
8Q	folkstone grey (CP)	+$0
91	white (CP)	+$0
98	studio white (CP)	+$0
G1	graphite (CP)	+$0
WL	warm stone (CP)	+$0
WN	warm grey neutral	+$0

Back to Back Trapezoid Height Adjustable Bench

DU2TS.
DU2TT.

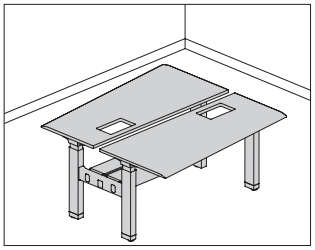

Product Information

Description

This bench is a 2 workstation unit that can be used in back to back height adjustable benching applications in series with other Renew™ Link back to back benches to create a run. The trapezoid shape creates individual and group work environments within a traditional benching application. Each workstation has a C-leg configuration, comes in multiple edge styles, and has options for laminate top with thermoplastic edge, laminate top with universal edge, veneer top and edge, or painted Formcoat® top and edge. There are multiple height adjustment, wire management, and switch options. Glides have ½″ of leveling adjustment. Shipped knocked down. Product is UL Listed.

Each table can be specified with a different height adjustment mechanism. Floor to top of surface height adjustment ranges are 27″-46″ for the electric standard range (E) option, 22″-48″ for the electric extended range (D) option, and 28½″ for the fixed height table (F).

Notes

To power bench applications, specify Connect™ separately. See planning guide for details.

Simple cable cover (PSC) is facility installed only.

High density cable trough (PHD) can be accessed by users for daily cord management. Available on 30″ deep tables only.

Power access cutouts are specifically sized for 5 wide and 6 wide Logic G1000 grommet mounted electrical distributors (Y1425.).

For linear bench sections, the NYC Power Entry (DU1352.08) can only fit, and must be installed in, 60″-wide and wider sections. For 120° bench sections, the NYC Power Entry (DU1352.08) can only fit, and must be installed in, 54″-wide and wider sections.

Dimensions

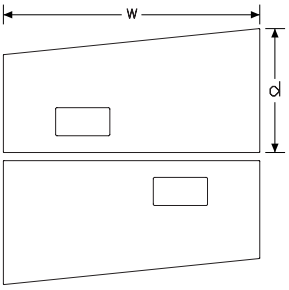

Left Hand/Left Hand

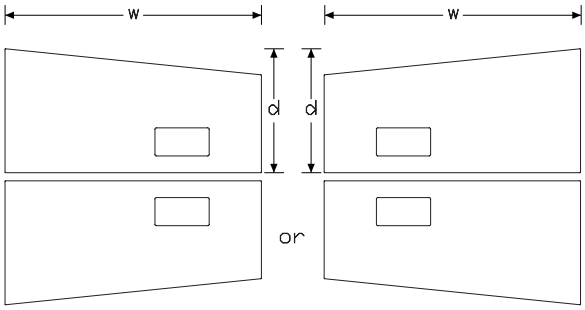

Left Hand/Right Hand

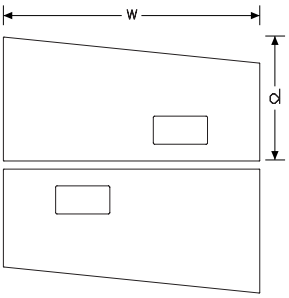

Right Hand/Right Hand

Specification Information

Step 1.

DU2T

Step 2. Edge

S. squared-edge
T. thin-edge

Step 3. Width

48 48″ wide (47″ surface size)
54 54″ wide (53″ surface size)
60 60″ wide (59″ surface size)
66 66″ wide (65″ surface size)
72 72″ wide (71″ surface size)

Step 4. Surface Material

For squared-edge (S.)

M thermally-fused laminate top/thermoplastic edge
T thermally-fused laminate top/universal edge
L high-pressure laminate top/thermoplastic edge
W veneer top/veneer edge
P painted Formcoat® top/edge
U high-pressure laminate/universal edge

For thin-edge (T.)

L high-pressure laminate top/thermoplastic edge
W veneer top/veneer edge
P painted Formcoat® top/edge

Step 5. Height Adjustable Table 1

E electric standard range
D electric extended range
F fixed table

Step 6. Height Adjustable Table 2

For electric standard range (E)

E electric standard range
D electric extended range
F fixed table

For electric extended range (D)

D electric extended range
F fixed table

For fixed table (F)

F fixed table

Step 7. Trapezoid Configuration

A left hand/left hand
B left hand/right hand
C right hand/right hand

Prices for Steps 1-7.

		EEA	EEB	EEC	EDA	EDB	EDC
DU2TS. 48	**M**	$9695	9695	9695	10492	10492	10492
	T	$9695	9695	9695	10492	10492	10492
	L	$9793	9793	9793	10598	10598	10598
	W	$11646	11646	11646	12597	12597	12597
	P	$10595	10595	10595	11466	11466	11466
	U	$9841	9841	9841	10651	10651	10651
54	**M**	$9850	9850	9850	10707	10707	10707
	T	$9850	9850	9850	10707	10707	10707
	L	$9950	9950	9950	10815	10815	10815
	W	$11826	11826	11826	12861	12861	12861
	P	$10762	10762	10762	11703	11703	11703
	U	$10000	10000	10000	10869	10869	10869
60	**M**	$9985	9985	9985	10907	10907	10907
	T	$9985	9985	9985	10907	10907	10907
	L	$10086	10086	10086	11017	11017	11017
	W	$11990	11990	11990	13094	13094	13094
	P	$10913	10913	10913	11918	11918	11918
	U	$10137	10137	10137	11072	11072	11072
66	**M**	$10147	10147	10147	11144	11144	11144
	T	$10147	10147	10147	11144	11144	11144
	L	$10250	10250	10250	11256	11256	11256
	W	$12182	12182	12182	13382	13382	13382
	P	$11087	11087	11087	12179	12179	12179
	U	$10302	10302	10302	11312	11312	11312
72	**M**	$10293	10293	10293	11371	11371	11371
	T	$10293	10293	10293	11371	11371	11371
	L	$10397	10397	10397	11485	11485	11485
	W	$12356	12356	12356	13651	13651	13651
	P	$11247	11247	11247	12427	12427	12427
	U	$10449	10449	10449	11542	11542	11542

		EFA	EFB	EFC	DDA	DDB	DDC
DU2TS. 48	M	$7924	7924	7924	12504	12504	12504
	T	$7924	7924	7924	12504	12504	12504
	L	$8005	8005	8005	12629	12629	12629
	W	$9869	9869	9869	15013	15013	15013
	P	$8738	8738	8738	13665	13665	13665
	U	$8045	8045	8045	12692	12692	12692
54	M	$8080	8080	8080	12805	12805	12805
	T	$8080	8080	8080	12805	12805	12805
	L	$8161	8161	8161	12934	12934	12934
	W	$10053	10053	10053	15376	15376	15376
	P	$8899	8899	8899	13995	13995	13995
	U	$8201	8201	8201	12998	12998	12998
60	M	$8216	8216	8216	13085	13085	13085
	T	$8216	8216	8216	13085	13085	13085
	L	$8299	8299	8299	13216	13216	13216
	W	$10217	10217	10217	15714	15714	15714
	P	$9054	9054	9054	14299	14299	14299
	U	$8340	8340	8340	13282	13282	13282
66	M	$8375	8375	8375	13424	13424	13424
	T	$8375	8375	8375	13424	13424	13424
	L	$8460	8460	8460	13559	13559	13559
	W	$10411	10411	10411	16120	16120	16120
	P	$9226	9226	9226	14672	14672	14672
	U	$8502	8502	8502	13626	13626	13626
72	M	$8523	8523	8523	13743	13743	13743
	T	$8523	8523	8523	13743	13743	13743
	L	$8609	8609	8609	13882	13882	13882
	W	$10587	10587	10587	16498	16498	16498
	P	$9386	9386	9386	15014	15014	15014
	U	$8652	8652	8652	13951	13951	13951

		DFA	DFB	DFC	FFA	FFB	FFC
DU2TS. 48	M	$12539	12539	12539	6155	6155	6155
	T	$12539	12539	12539	6155	6155	6155
	L	$12665	12665	12665	6218	6218	6218
	W	$15409	15409	15409	8099	8099	8099
	P	$13780	13780	13780	6875	6875	6875
	U	$12728	12728	12728	6248	6248	6248
54	M	$12881	12881	12881	6308	6308	6308
	T	$12881	12881	12881	6308	6308	6308
	L	$13010	13010	13010	6372	6372	6372
	W	$15824	15824	15824	8281	8281	8281
	P	$14154	14154	14154	7043	7043	7043
	U	$13075	13075	13075	6404	6404	6404
60	M	$13204	13204	13204	6444	6444	6444
	T	$13204	13204	13204	6444	6444	6444
	L	$13337	13337	13337	6509	6509	6509
	W	$16209	16209	16209	8445	8445	8445
	P	$14507	14507	14507	7192	7192	7192
	U	$13403	13403	13403	6541	6541	6541
66	M	$13591	13591	13591	6606	6606	6606
	T	$13591	13591	13591	6606	6606	6606
	L	$13728	13728	13728	6673	6673	6673
	W	$16672	16672	16672	8639	8639	8639
	P	$14929	14929	14929	7368	7368	7368
	U	$13796	13796	13796	6706	6706	6706
72	M	$13955	13955	13955	6750	6750	6750
	T	$13955	13955	13955	6750	6750	6750
	L	$14096	14096	14096	6818	6818	6818
	W	$17108	17108	17108	8814	8814	8814
	P	$15324	15324	15324	7529	7529	7529
	U	$14166	14166	14166	6852	6852	6852

		EEA	EEB	EEC	EDA	EDB	EDC
DU2TT. 48	L	$10659	10659	10659	11534	11534	11534
	W	$12609	12609	12609	13642	13642	13642
	P	$11477	11477	11477	12417	12417	12417
54	L	$10827	10827	10827	11774	11774	11774
	W	$12810	12810	12810	13927	13927	13927
	P	$11660	11660	11660	12676	12676	12676
60	L	$10978	10978	10978	11990	11990	11990
	W	$12986	12986	12986	14184	14184	14184
	P	$11817	11817	11817	12906	12906	12906
66	L	$11156	11156	11156	12251	12251	12251
	W	$13198	13198	13198	14497	14497	14497
	P	$12008	12008	12008	13191	13191	13191
72	L	$11313	11313	11313	12501	12501	12501
	W	$13386	13386	13386	14788	14788	14788
	P	$12183	12183	12183	13457	13457	13457

		EFA	EFB	EFC	DDA	DDB	DDC
DU2TT. 48	L	$8867	8867	8867	13747	13747	13747
	W	$10841	10841	10841	16260	16260	16260
	P	$9620	9620	9620	14797	14797	14797
54	L	$9034	9034	9034	14080	14080	14080
	W	$11041	11041	11041	16651	16651	16651
	P	$9801	9801	9801	15154	15154	15154
60	L	$9184	9184	9184	14388	14388	14388
	W	$11217	11217	11217	17019	17019	17019
	P	$9962	9962	9962	15486	15486	15486

66	**L**	$9361	9361	9361	14757	14757	14757
	W	$11428	11428	11428	17460	17460	17460
	P	$10154	10154	10154	15889	15889	15889
72	**L**	$9522	9522	9522	15109	15109	15109
	W	$11618	11618	11618	17871	17871	17871
	P	$10326	10326	10326	16265	16265	16265

			DFA	**DFB**	**DFC**	**FFA**	**FFB**	**FFC**
DU2TT.	**48**	**L**	$13937	13937	13937	7072	7072	7072
		W	$16841	16841	16841	9071	9071	9071
		P	$15081	15081	15081	7761	7761	7761
	54	**L**	$14315	14315	14315	7239	7239	7239
		W	$17290	17290	17290	9269	9269	9269
		P	$15485	15485	15485	7944	7944	7944
	60	**L**	$14672	14672	14672	7389	7389	7389
		W	$17709	17709	17709	9451	9451	9451
		P	$15866	15866	15866	8106	8106	8106
	66	**L**	$15096	15096	15096	7570	7570	7570
		W	$18210	18210	18210	9660	9660	9660
		P	$16324	16324	16324	8298	8298	8298
	72	**L**	$15495	15495	15495	7730	7730	7730
		W	$18683	18683	18683	9848	9848	9848
		P	$16753	16753	16753	8468	8468	8468

Step 8. Central Cable Trough

ECT	enhanced cable trough w/covers - data/power routing and cord management	+$0

Step 9. Switch Option

For fixed table (F) with fixed table (F)

SNN	no control	+$0

For electric standard range (E) or electric extended range (D) with fixed table (F)

SUD	simple up down	+$0
SRM	digital read out with memory	+$160

For electric standard range (E) or electric extended range (D) with electric standard range (E), or electric extended range (D)

SUD	simple up down	+$0
SRM	digital read out with memory	+$320

Step 10. Workstation Cord Cover/Cable Management Table 1 and 2

PSC	simple cable	+$0
PHD	high density cable trough	+$549

Step 11. Power Access Cutout - Tables 1 and 2

For 48" wide (47" surface size) (48), 54" wide (53" surface size) (54), 60" wide (59" surface size) (60), 66" wide (65" surface size) (66), or 72" wide (71" surface size) (72) with simple cable (PSC), or high density cable trough (PHD)

NNN	no cutout	+$0

For 54" wide (53" surface size) (54), 60" wide (59" surface size) (60), 66" wide (65" surface size) (66), or 72" wide (71" surface size) (72) with high density cable trough (PHD)

NNN	no cutout	+$0
OAC	offset center cutout for 6 port Y1425	+$45
OC5	offset center cutout for 5 port Y1425 A	+$45

Step 12.

Top Finish

For high-pressure laminate top/thermoplastic edge (L) or high-pressure laminate/universal edge (U)

125	natural maple (CP)	+$0
126	natural cherry (CP)	+$0
127	walnut (CP)	+$0
139	light ash (CP)	+$0
140	warm ash (CP)	+$0
UBK	ultra black (CP)	+$0
76	light brown walnut	+$0
8Q	folkstone grey (CP)	+$0
91	white (CP)	+$0
98	studio white (CP)	+$0
CL	cool grey neutral	+$0
HF	inner tone light	+$0
HP	light anigre	+$0
LBA	clear on ash (CP)	+$0
LBR	phantom ecru	+$0
LBS	phantom cocoa	+$0
LBU	medium matte walnut (CP)	+$0
LBV	warm grey teak	+$0
LBB	oak on ash (CP)	+$0
LBC	walnut on ash (CP)	+$0
LBF	neutral twill	+$0
LBJ	graphite twill	+$0
LBQ	white twill	+$0
LU	soft white	+$0
WL	warm stone (CP)	+$0
WN	warm grey neutral	+$0

Top Finish

For thermally-fused laminate top/thermoplastic edge (M) or thermally-fused laminate top/universal edge (T)

125	natural maple (CP)	+$0
126	natural cherry (CP)	+$0
127	walnut (CP)	+$0
139	light ash (CP)	+$0
140	warm ash (CP)	+$0
91	white (CP)	+$0
98	studio white (CP)	+$0
LBA	clear on ash (CP)	+$0
LBB	oak on ash (CP)	+$0
LBC	walnut on ash (CP)	+$0
LBF	neutral twill	+$0
LBQ	white twill	+$0
LBU	medium matte walnut (CP)	+$0
LU	soft white	+$0

Top/Edge Finish

For veneer top/veneer edge (W)

2U	light brown walnut	+$170
40	dark brown walnut	+$170
CHD	noble cherry	+$170
ET	clear on ash	+$170
EU	oak on ash	+$170
EV	walnut on ash	+$170
EW	medium matte walnut	+$170
UL	natural maple	+$170
WHN	natural white oak	+$170

Top/Edge Finish

For painted Formcoat® top/edge (P)

8Q	folkstone grey (CP) A	+$0
91	white (CP) A	+$0
LU	soft white A	+$0

Step 13. Edge Finish

For thermally-fused laminate top/thermoplastic edge (M) or high-pressure laminate top/thermoplastic edge (L)

125	natural maple (CP)	+$0
126	natural cherry (CP)	+$0
127	walnut (CP)	+$0
139	light ash (CP)	+$0
140	warm ash (CP)	+$0
G1	graphite (CP)	+$0
UBK	ultra black (CP)	+$0
76	light brown walnut	+$0
8Q	folkstone grey (CP)	+$0
91	white (CP)	+$0
98	studio white (CP)	+$0
CL	cool grey neutral	+$0
HF	inner tone light	+$0
HP	light anigre	+$0
LBA	clear on ash (CP)	+$0
LBR	phantom ecru	+$0
LBS	phantom cocoa	+$0
LBU	medium matte walnut (CP)	+$0
LBV	warm grey teak	+$0
LBB	oak on ash (CP)	+$0
LBC	walnut on ash (CP)	+$0
LBF	neutral twill	+$0
LBJ	graphite twill	+$0
LBQ	white twill	+$0
LU	soft white	+$0
WL	warm stone (CP)	+$0
WN	warm grey neutral	+$0

For thermally-fused laminate top/universal edge (T) or high-pressure laminate/universal edge (U)

PLY	plywood edge	+$50

Step 14. Base Finish

Metallic Paint

611	beige mist metallic (CP)	+$0
613	silver (CP)	+$0
SNA	satin aluminum	+$60
SNB	satin bronze	+$60
SNC	satin carbon	+$60

Sand Texture Paint		
BK	black	+$0
UBK	ultra black (CP)	+$0

Smooth Paint		
8Q	folkstone grey (CP)	+$0
91	white (CP)	+$0
98	studio white (CP)	+$0
G1	graphite (CP)	+$0
WL	warm stone (CP)	+$0
WN	warm grey neutral	+$0

Single Sided Rectangular Height Adjustable Bench

DU1AS.
DU1AT.

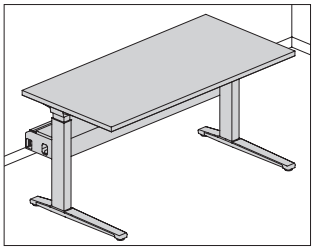

Product Information

Description

This rectangular single sided bench is a 1 workstation unit that can be used in single sided height adjustable benching applications in series with other Renew™ Link single sided benches to create a run. Each workstation has a C-leg configuration, comes in multiple edge styles, and has options for laminate top with thermoplastic edge, laminate top with universal edge, veneer top and edge, or painted Formcoat® top and edge. There are multiple height adjustment, wire management, and switch options. Glides have ½″ of leveling adjustment. Shipped knocked down. Product is UL Listed.

Each table can be specified with a different height adjustment mechanism. Floor to top of surface height adjustment ranges are 27″-46″ for the electric standard range (E) option, 22″-48″ for the electric extended range (D) option, and 28½″ for the fixed height table (F).

Notes

To power bench applications, specify Connect™ separately. See planning guide for details.

Sizes listed for table depth and width are nominal. Depth of surface is reduced 1″ for cord management. Width of surface is reduced 1″ to minimize possible pinch point hazards between benches.

Simple cable cover (PSC) is facility installed only.

High density cable trough (PHD) can be accessed by users for daily cord management. Available on 30″ deep tables only.

Power access cutouts are specifically sized for 5 wide and 6 wide Logic G1000 grommet mounted electrical distributors (Y1425.).

For linear bench sections, the NYC Power Entry (DU1352.08) can only fit, and must be installed in, 60″-wide and wider sections. For 120° bench sections, the NYC Power Entry (DU1352.08) can only fit, and must be installed in, 54″-wide and wider sections.

Dimensions

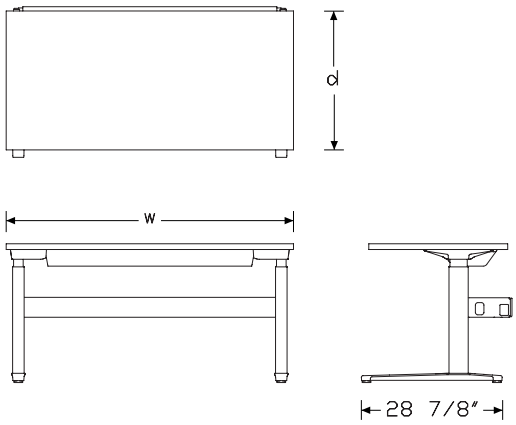

Specification Information

Step 1.

DU1A A

Step 2. Edge

S. squared-edge A
T. thin-edge A

Step 3. Depth

24 24″ deep (23″ surface size) A
30 30″ deep (29″ surface size) A

Step 4. Width

48 48″ wide (47″ surface size) A
54 54″ wide (53″ surface size) A
60 60″ wide (59″ surface size) A
66 66″ wide (65″ surface size) A
72 72″ wide (71″ surface size) A

Step 5. Surface Material

For squared-edge (S.)

M thermally-fused laminate top/thermoplastic edge A
T thermally-fused laminate top/universal edge A
L high-pressure laminate top/thermoplastic edge A
W veneer top/veneer edge A
P painted Formcoat® top/edge A
U high-pressure laminate/universal edge A

For thin-edge (T.)

L high-pressure laminate top/thermoplastic edge A
W veneer top/veneer edge A
P painted Formcoat® top/edge A

Step 6. Height Adjustment

E electric standard range A
D electric extended range A
F fixed table A

Prices for Steps 1-6.

		ME	MD	MF	TE	TD	TF
DU1AS. 24	**48**	$5099	5347	3421	5101	5351	3421
	54	$5154	5433	3502	5180	5433	3502
	60	$5255	5514	3593	5257	5514	3581
	66	$5366	5679	3664	5343	5679	3664
	72	$5417	5736	3739	5417	5736	3739
30	**48**	$5183	5437	3509	5186	5439	3509
	54	$5277	5537	3597	5277	5537	3600
	60	$5345	5604	3666	5345	5608	3668
	66	$5429	5692	3754	5433	5696	3754
	72	$5507	5798	3826	5512	5777	3829

		LE	LD	LF	WE	WD	WF
DU1AS. 24	**48**	$5176	5429	3474	6128	6423	4444
	54	$5232	5516	3556	6221	6522	4541
	60	$5335	5598	3649	6313	6618	4630
	66	$5447	5765	3720	6416	6727	4735
	72	$5499	5822	3796	6506	6821	4825
30	**48**	$5262	5520	3562	6232	6534	4549
	54	$5358	5621	3653	6339	6647	4658
	60	$5427	5688	3722	6418	6734	4741
	66	$5510	5779	3810	6522	6841	4843
	72	$5590	5886	3885	6614	6934	4934

		PE	PD	PF	UE	UD	UF
DU1AS. 24	**48**	$5575	5846	3808	5178	5433	3474
	54	$5662	5939	3896	5259	5516	3556
	60	$5747	6025	3983	5337	5598	3634
	66	$5840	6124	4073	5424	5765	3720
	72	$5920	6209	4157	5499	5822	3796
30	**48**	$5672	5946	3905	5264	5522	3562
	54	$5774	6050	4006	5358	5621	3656
	60	$5841	6132	4084	5427	5692	3724
	66	$5940	6225	4173	5516	5783	3810
	72	$6020	6314	4257	5595	5864	3888

		LE	LD	LF	WE	WD	WF
DU1AT. 24	**48**	$5746	6026	4000	6796	7124	5077
	54	$5840	6120	4095	6904	7237	5187
	60	$5924	6211	4180	7009	7344	5286
	66	$6020	6308	4275	7119	7467	5402
	72	$6103	6402	4362	7220	7569	5502
30	**48**	$5845	6127	4103	6914	7250	5197
	54	$5949	6238	4205	7034	7378	5317
	60	$6027	6320	4282	7127	7477	5410
	66	$6121	6417	4377	7239	7591	5523
	72	$6206	6508	4462	7342	7698	5625

		PE	PD	PF	UE	UD	UF
DU1AT. 24	**48**	$6185	6486	4381	—	—	—
	54	$6284	6588	4480	—	—	—
	60	$6378	6686	4573	—	—	—
	66	$6480	6796	4678	—	—	—
	72	$6576	6891	4767	—	—	—
30	**48**	$6292	6601	4490	—	—	—
	54	$6403	6715	4598	—	—	—
	60	$6487	6801	4682	—	—	—
	66	$6590	6909	4786	—	—	—
	72	$6684	7005	4879	—	—	—

Step 7. Central Cable Trough

ECT	enhanced cable trough w/covers - data/power routing and cord management A	+$0

Step 8. Switch Option

For electric standard range (E) or electric extended range (D)

SUD	simple up down A	+$0
SRM	digital read out with memory A	+$160

For fixed table (F)

SNN	no control A	+$0

Step 9. Workstation Cord Cover/Cable Management

For 24" deep (23" surface size) (24)

PSC	simple cable A	+$0

For 30" deep (29" surface size) (30)

PSC	simple cable A	+$0
PHD	high density cable trough A	+$299

Step 10. Power Access Cutout - Tables 1 and 2

For 24" deep (23" surface size) (24) or 30" deep (29" surface size) (30) with 48" wide (47" surface size) (48), 54" wide (53" surface size) (54), or 60" wide (59" surface size) (60), or 66" wide (65" surface size) (66), or 72" wide (71" surface size) (72) with simple cable (PSC)

NNN	no cutout A	+$0

For 30" deep (29" surface size) (30) with 48" wide (47" surface size) (48) with high density cable trough (PHD)

NNN	no cutout A	+$0

For 30" deep (29" surface size) (30) with 54" wide (53" surface size) (54) with high density cable trough (PHD)

NNN	no cutout A	+$0
LAC	left cutout 6 port Y1425 A	+$45
RAC	right cutout 6 port Y1425 A	+$45
LC5	left cutout 5 port Y1425 A	+$45
RC5	right cutout 5 port Y1425 A	+$45

For 30" deep (29" surface size) (30) with 60" wide (59" surface size) (60), or 66" wide (65" surface size) (66), or 72" wide (71" surface size) (72) with high density cable trough (PHD)

NNN	no cutout A	+$0
LAC	left cutout A	+$45
RAC	right cutout A	+$45
CAC	center cutout A	+$45
LC5	left cutout 5 port Y1425 A	+$45
RC5	right cutout 5 port Y1425 A	+$45
CC5	center cutout 5 port Y1425 A	+$45

Step 11.

Top Finish

For high-pressure laminate top/thermoplastic edge (L) or high-pressure laminate/universal edge (U)

125	natural maple (CP) A	+$0
126	natural cherry (CP) A	+$0
127	walnut (CP) A	+$0
139	light ash (CP) A	+$0
140	warm ash (CP) A	+$0
UBK	ultra black (CP) A	+$0
76	light brown walnut A	+$0
8Q	folkstone grey (CP) A	+$0
91	white (CP) A	+$0
98	studio white (CP) A	+$0
CL	cool grey neutral A	+$0
HF	inner tone light A	+$0
HP	light anigre A	+$0
LBA	clear on ash (CP) A	+$0
LBR	phantom ecru A	+$0
LBS	phantom cocoa A	+$0
LBU	medium matte walnut (CP) A	+$0
LBV	warm grey teak A	+$0
LBB	oak on ash (CP) A	+$0
LBC	walnut on ash (CP) A	+$0
LBF	neutral twill A	+$0
LBJ	graphite twill A	+$0
LBQ	white twill A	+$0
LU	soft white A	+$0
WL	warm stone (CP) A	+$0
WN	warm grey neutral A	+$0

Top Finish

For thermally-fused laminate top/thermoplastic edge (M) or thermally-fused laminate top/universal edge (T)

125	natural maple (CP) A	+$0
126	natural cherry (CP) A	+$0
127	walnut (CP) A	+$0
139	light ash (CP) A	+$0
140	warm ash (CP) A	+$0
91	white (CP) A	+$0
98	studio white (CP) A	+$0
LBA	clear on ash (CP) A	+$0
LBB	oak on ash (CP) A	+$0
LBC	walnut on ash (CP) A	+$0
LBF	neutral twill A	+$0
LBQ	white twill A	+$0
LBU	medium matte walnut (CP) A	+$0
LU	soft white A	+$0

Top/Edge Finish

For veneer top/veneer edge (W)

2U	light brown walnut A	+$85
40	dark brown walnut A	+$85
CHD	noble cherry A	+$85
ET	clear on ash A	+$85
EU	oak on ash A	+$85
EV	walnut on ash A	+$85
EW	medium matte walnut A	+$85
UL	natural maple A	+$85
WHN	natural white oak A	+$85

Top/Edge Finish

For painted Formcoat® top/edge (P)

8Q	folkstone grey (CP) A	+$0
91	white (CP) A	+$0
LU	soft white A	+$0

Step 12. Edge Finish

For thermally-fused laminate top/thermoplastic edge (M) or high-pressure laminate top/thermoplastic edge (L)

125	natural maple (CP) A	+$0
126	natural cherry (CP) A	+$0
127	walnut (CP) A	+$0
139	light ash (CP) A	+$0
140	warm ash (CP) A	+$0
G1	graphite (CP) A	+$0
UBK	ultra black (CP) A	+$0
76	light brown walnut A	+$0
8Q	folkstone grey (CP) A	+$0
91	white (CP) A	+$0
98	studio white (CP) A	+$0
CL	cool grey neutral A	+$0
HF	inner tone light A	+$0
HP	light anigre A	+$0
LBA	clear on ash (CP) A	+$0
LBR	phantom ecru A	+$0
LBS	phantom cocoa A	+$0
LBU	medium matte walnut (CP) A	+$0
LBV	warm grey teak A	+$0
LBB	oak on ash (CP) A	+$0
LBC	walnut on ash (CP) A	+$0
LBF	neutral twill A	+$0
LBJ	graphite twill A	+$0
LBQ	white twill A	+$0
LU	soft white A	+$0
WL	warm stone (CP) A	+$0
WN	warm grey neutral A	+$0

For thermally-fused laminate top/universal edge (T) or high-pressure laminate/universal edge (U)

PLY	plywood edge A	+$50

Step 13. Base Finish

Metallic Paint

611	beige mist metallic (CP) A	+$0
613	silver (CP) A	+$0
SNA	satin aluminum A	+$30
SNB	satin bronze A	+$30
SNC	satin carbon A	+$30

Sand Texture Paint

BK	black A	+$0
UBK	ultra black (CP) A	+$0

Smooth Paint

8Q	folkstone grey (CP) A	+$0
91	white (CP) A	+$0
98	studio white (CP) A	+$0
G1	graphite (CP) A	+$0
WL	warm stone (CP) A	+$0
WN	warm grey neutral A	+$0

Renew™ Link 120 Degree Height Adjustable Bench

DU3AS.
DU3AT.

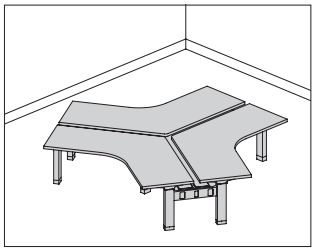

Product Information

Description

This back-to-back bench is a 3-workstation unit that can be used in back-to-back height adjustable benching applications in series with other Renew™ Link back-to-back benches. Each workstation has a C-leg configuration, comes in multiple edge styles, and has options for laminate top with thermoplastic edge or veneer top and edge. There are multiple height adjustment, wire management, and switch options. Glides have ½″ of leveling adjustment. Shipped knocked down. Product is UL Listed.

Notes

Floor-to-top-of-surface height adjustment ranges are 27″-46″ for the electric standard range (EEE) option and 22″-48″ for the electric extended range (DDD) option.

To power bench applications, order Connect™ separately. See planning guide for details.

Sizes listed for table depth and width are nominal. Depth of surface is reduced 1″ for cord management. Width of surface is reduced 1″ to minimize possible pinch point hazards between benches.

Simple cable cover (PSC) is facility installed only.

High density cable trough (PHD) can be accessed by users for daily cord management. Available on 30″ deep tables only. Cutouts must be placed on surface above high-density cable trough.

Power access cutouts are specifically sized for 5-wide and 6-wide Logic G1000 grommet mounted electrical distributors (Y1425.). No cutouts can be specified when the simple cable under-worksurface cable management (PSC) option is selected.

When specifying height adjustable range (EEE or DDD), all 3 tables will be the same range (standard or extended).

For linear bench sections, the NYC Power Entry (DU1352.08) can only fit, and must be installed in, 60″-wide and wider sections. For 120° bench sections, the NYC Power Entry (DU1352.08) can only fit, and must be installed in, 54″-wide and wider sections.

Dimensions

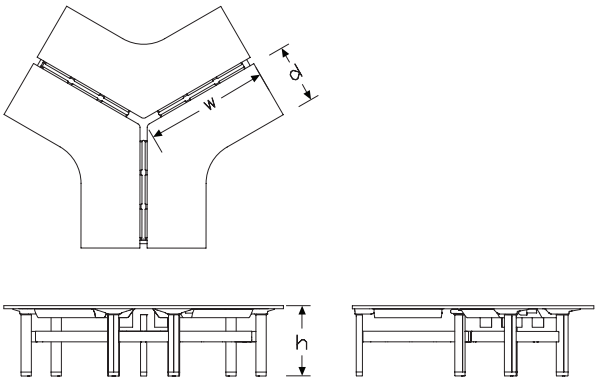

Specification Information

Step 1.

DU3A

Step 2. Edge

S. squared-edge
T. thin-edge

Step 3. Depth

24 24″ deep (23″ surface size)
30 30″ deep (29″ surface size)

Step 4. Width

48 48″ wide (47″ surface size)
54 54″ wide (53″ surface size)
60 60″ wide (59″ surface size)

Step 5. Surface Material

For squared-edge (S.)

L high-pressure laminate top/thermoplastic edge
M thermally-fused laminate top/thermoplastic edge
W veneer top/veneer edge [A]

For thin-edge (T.)

L high-pressure laminate top/thermoplastic edge
W veneer top/veneer edge [A]

Step 6. Height Adjustable Range Tables 1, 2, and 3

DDD electric extended range
EEE electric standard range

Prices for Steps 1-6.

			LDDD	LEEE	MDDD	MEEE	WDDD	WEEE
DU3AS.	**24**	**48**	$30020	23282	29574	22936	35516	27545
		54	$32088	24678	31611	24311	37962	29198
		60	$34284	26159	33774	25770	40563	30948
	30	**48**	$31600	24508	31130	24144	37384	28994
		54	$33773	25978	33272	25592	39959	30735
		60	$36091	27535	35555	27127	42697	32577
DU3AT.	**24**	**48**	$32575	25263	—	—	38539	29888
		54	$34818	26779	—	—	41192	31682
		60	$37205	28385	—	—	44013	33581
	30	**48**	$34288	26728	—	—	40565	31461
		54	$36651	28189	—	—	43361	33350
		60	$39162	29879	—	—	46332	35350

Step 7. Central Cable Trough Tables 1, 2, and 3

For 48″ wide (47″ surface size) (48) or 54″ wide (53″ surface size) (54)

BCT basic cable trough - data/power routing and cord management +$1200
ECT enhanced cable trough w/covers - data/power routing and cord management +$2100

For 60″ wide (59″ surface size) (60)

BCT basic cable trough - data/power routing and cord management +$1200
ECT enhanced cable trough w/covers - data/power routing and cord management +$2100

Step 8. Switch Option

For electric standard range (EEE)

SRM digital read out with memory +$240
SUD simple up down +$150

For electric extended range (DDD)

SRM digital read out with memory +$480
SUD simple up down +$150

Step 9. Under Work Surface Cable Management Tables 1, 2, and 3

For 24″ deep (23″ surface size) (24)

PSC simple cable +$0

For 30″ deep (29″ surface size) (30)

MIX 1 simple cable and 1 high density cable trough +$825
PHD (2) high density cable trough +$1650
PSC (2) simple cable +$0

Step 10. Power Access Cutout - Tables 1, 2, and 3

For 24″ deep (23″ surface size) (24) or 30″ deep (29″ surface size) (30) with 48″ wide (47″ surface size) (48), or 54″ wide (53″ surface size) (54), or 60″ wide (59″ surface size) (60) with (2) simple cable (PSC), or simple cable (PSC)

NNN no cutout +$0

For 30" deep (29" surface size) (30) with 48" wide (47" surface size) (48), or 54" wide (53" surface size) (54), or 60" wide (59" surface size) (60) with 1 simple cable and 1 high density cable trough (MIX), or (2) high density cable trough (PHD)

NNN	no cutout	+$0
LAC	left cutout 6 port Y1425	+$68
RAC	right cutout 6 port Y1425	+$68
LC5	left cutout 5 port Y1425	+$68
RC5	right cutout 5 port Y1425	+$68

Step 11.

Top Finish

For high-pressure laminate top/thermoplastic edge (L)

125	natural maple (CP)	+$0
126	natural cherry (CP)	+$0
127	walnut (CP)	+$0
139	light ash (CP)	+$0
140	warm ash (CP)	+$0
76	light brown walnut	+$0
8Q	folkstone grey (CP)	+$0
91	white (CP)	+$0
98	studio white (CP)	+$0
CL	cool grey neutral	+$0
HF	inner tone light	+$0
HP	light anigre	+$0
LBA	clear on ash (CP)	+$0
LBB	oak on ash (CP)	+$0
LBC	walnut on ash (CP)	+$0
LBF	neutral twill	+$0
LBJ	graphite twill	+$0
LBQ	white twill	+$0
LBR	phantom ecru A	+$0
LBS	phantom cocoa A	+$0
LBU	medium matte walnut (CP) A	+$0
LBV	warm grey teak A	+$0
LT	light tone	+$0
LU	soft white	+$0
WL	warm stone (CP)	+$0
WN	warm grey neutral	+$0

Top Finish

For thermally-fused laminate top/thermoplastic edge (M)

125	natural maple (CP)	+$0
126	natural cherry (CP)	+$0
127	walnut (CP)	+$0
139	light ash (CP)	+$0
140	warm ash (CP)	+$0
91	white (CP)	+$0
98	studio white (CP)	+$0
LBA	clear on ash (CP)	+$0
LBB	oak on ash (CP)	+$0
LBC	walnut on ash (CP)	+$0
LBF	neutral twill	+$0
LBQ	white twill	+$0
LBU	medium matte walnut (CP)	+$0
LU	soft white	+$0

Top/Edge Finish

For veneer top/veneer edge (W)

2U	light brown walnut A	+$255
40	dark brown walnut A	+$255
CHD	noble cherry A	+$255
ET	clear on ash A	+$255
EU	oak on ash A	+$255
EV	walnut on ash A	+$255
EW	medium matte walnut A	+$255
UL	natural maple A	+$255
WHN	natural white oak A	+$255

Step 12. Edge Finish

For high-pressure laminate top/thermoplastic edge (L) or thermally-fused laminate top/thermoplastic edge (M)

125	natural maple (CP)	+$0
126	natural cherry (CP)	+$0
127	walnut (CP)	+$0
139	light ash (CP)	+$0
140	warm ash (CP)	+$0
76	light brown walnut	+$0
8Q	folkstone grey (CP)	+$0
91	white (CP)	+$0
98	studio white (CP)	+$0
CL	cool grey neutral	+$0
G1	graphite (CP)	+$0
HF	inner tone light	+$0
HP	light anigre	+$0
LBA	clear on ash (CP)	+$0
LBB	oak on ash (CP)	+$0
LBC	walnut on ash (CP)	+$0
LBF	neutral twill	+$0
LBJ	graphite twill	+$0
LBQ	white twill	+$0
LBR	phantom ecru	+$0
LBS	phantom cocoa	+$0
LBU	medium matte walnut (CP)	+$0
LBV	warm grey teak	+$0
LU	soft white	+$0
UBK	ultra black (CP)	+$0
WL	warm stone (CP)	+$0
WN	warm grey neutral	+$0

Step 13. Base Finish

Sand Texture Paint

BK	black	+$0
UBK	ultra black (CP)	+$0

Smooth Paint

8Q	folkstone grey (CP)	+$0
91	white (CP)	+$0
98	studio white (CP)	+$0
G1	graphite (CP)	+$0
WL	warm stone (CP)	+$0
WN	warm grey neutral	+$0

Metallic Paint

611	beige mist metallic (CP)	+$0
613	silver (CP)	+$0
SNA	satin aluminum	+$60
SNB	satin bronze	+$60
SNC	satin carbon	+$60

End Caps - Enhanced Cable Trough

DU4B.
DU4S.

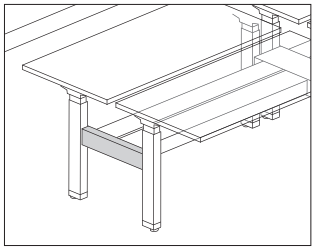

Product Information

Description

These cover plates create a clean and finished aesthetic at the end of runs. Finishes are available to match the base finishes of Renew™ Link and Nevi™ Link benches. Product is UL Listed.

Notes

For single sided bench runs, specify single sided (DU4S.EC). Single sided end caps (DU4S.EC) do not work with Nevi Link. For back to back bench runs, specify back to back (DU4B.EC).

Only 1 set of end caps needed per run. End caps are placed on each end of the run.

End Caps-Enhanced Cable Trough are for use with height adjustable benching solutions with the enhanced cable trough (ECT) wire management option.

For height adjustable benching solutions with the basic cable trough (BCT) wire management option, see the End Caps-Basic Cable Trough (DY4EC., DY4EF.).

Dimensions

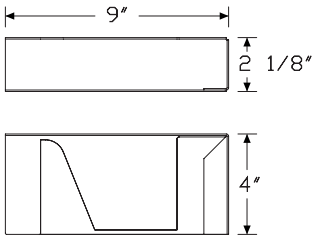

Single Sided

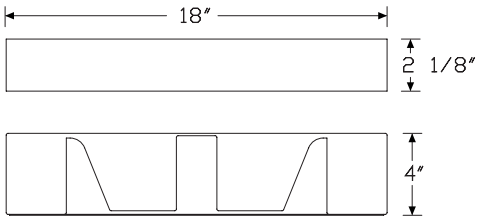

Back to Back

Specification Information

Step 1.

DU4

Step 2. Single Sided or Back to Back

S.	single sided
B.	back to back

Step 3. End Cap Quantity

EC	end cap - 2 per box

Prices for Steps 1-3.

DU4S.	**EC**	$201
DU4B.	**EC**	$250

Step 4. Finish

Metallic Paint		
611	beige mist metallic (CP)	+$0
613	silver (CP)	+$0
SNA	satin aluminum	+$30
SNB	satin bronze	+$30
SNC	satin carbon	+$30
Sand Texture Paint		
BK	black	+$0
UBK	ultra black (CP)	+$0
Smooth Paint		
8Q	folkstone grey (CP)	+$0
91	white (CP)	+$0
98	studio white (CP)	+$0
G1	graphite (CP)	+$0
WL	warm stone (CP)	+$0
WN	warm grey neutral	+$0

Connecting Plate - Enhanced Cable Trough

DU4B.
DU4S.

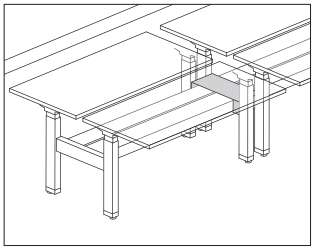

Product Information

Description

These cover plates create a clean and finished aesthetic where bench sections come together. Finishes are available to match the base finishes of Renew™ Link and Nevi™ Link benches. Connecting plates come 1 per package. Product is UL Listed.

Notes

For single sided bench runs, specify single sided (DU4S.CP). For back to back bench runs, specify back to back (DU4B.CP).

Connecting plates are required to connect 1 bench section to another section. The number of connecting plates needed in a run is 1 less than the number of bench sections in the run.

Connecting Plate-Enhanced Cable Trough is for use with height adjustable benching solutions with the enhanced cable trough (ECT) wire management option.

For height adjustable benching solutions with the basic cable trough (BCT) wire management option, see the Connecting Plate-Basic Cable Trough (DY4CP.).

Dimensions

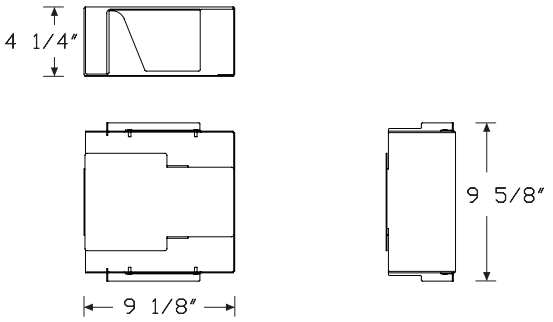

Single Sided

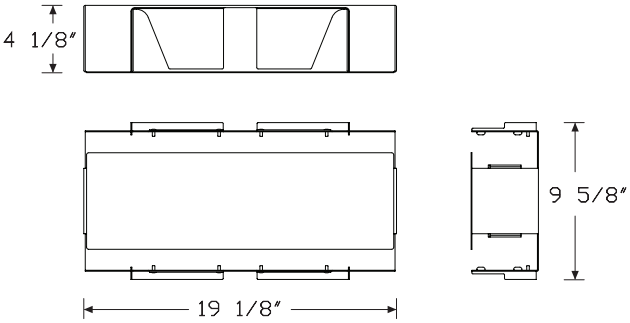

Back to Back

Connecting Plate - Enhanced Cable Trough *continued*

Specification Information		
Step 1.		
DU4		
Step 2. Single Sided or Back to Back		
S.	single sided	
B.	back to back	
Step 3. Connecting Plate or End Cap		
CP	connecting plate (between tables) 1x box	
Prices for Steps 1-3.		
DU4S. CP		$243
DU4B. CP		$281
Step 4. Finish		
Metallic Paint		
611	beige mist metallic (CP)	+$0
613	silver (CP)	+$0
SNA	satin aluminum	+$30
SNB	satin bronze	+$30
SNC	satin carbon	+$30
Sand Texture Paint		
BK	black	+$0
UBK	ultra black (CP)	+$0
Smooth Paint		
8Q	folkstone grey (CP)	+$0
91	white (CP)	+$0
98	studio white (CP)	+$0
G1	graphite (CP)	+$0
WL	warm stone (CP)	+$0
WN	warm grey neutral	+$0

Renew™ Link Back-to-Back Leg Shroud DU4C.

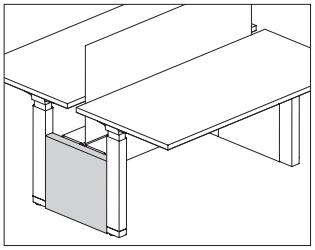

Product Information

Description

This metal shroud covers and wraps around the legs of Renew™ Link back-to-back units to create a unified and integrated leg aesthetic.

Notes

To add shrouds to each end of a run, a quantity of 2 end-of-run shrouds must be ordered.

To add shrouds mid run, a quantity of 1 mid-run shrouds must be ordered for each connection point.

Dimensions

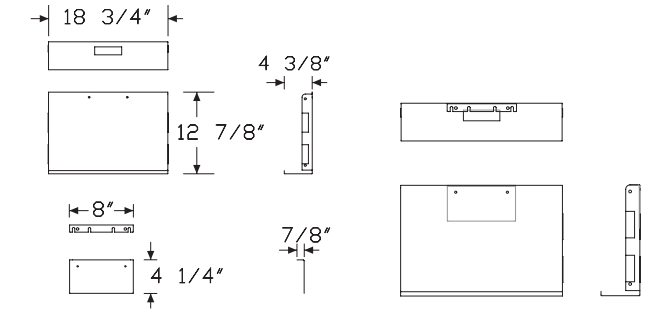

End of Run for Gallery Panel

Assembled view

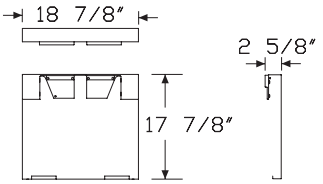

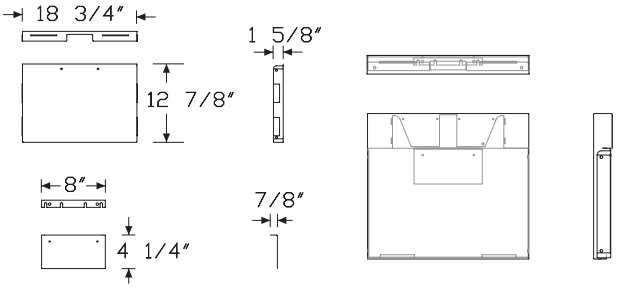

End of Run

Assembled view

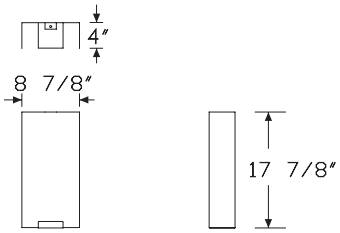

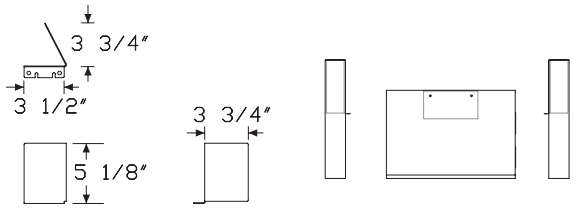

Mid-Run

Assembled view

Renew™ Link Back-to-Back Leg Shroud *continued*

Specification Information

Step 1.

DU4C.

Step 2. Location

EG	end of run for gallery panel
ER	end of run
MR	mid run

Step 3. Material

P	painted steel

Prices for Steps 1-3.

		P
DU4C.	**EG**	$248
	ER	$302
	MR	$494

Step 4. Height Range of Tables

For mid run (MR)

D	extended	+$0
E	standard and fixed	+$0

For end of run for gallery panel (EG) or end of run (ER)

N	extended/standard/fixed	+$0

Step 5. Finish

611	beige mist metallic (CP)	+$0
613	silver (CP)	+$0
SNA	satin aluminum	+$30
SNB	satin bronze	+$30
SNC	satin carbon	+$30
BK	black	+$0
UBK	ultra black (CP)	+$0
8Q	folkstone grey (CP)	+$0
91	white (CP)	+$0
98	studio white (CP)	+$0
G1	graphite (CP)	+$0
WL	warm stone (CP)	+$0
WN	warm grey neutral	+$0

End Caps - Basic Cable Trough DY4EC.

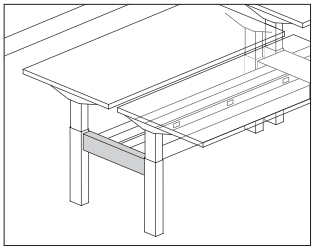

Product Information

Description

This cover plate creates a clean and finished aesthetic at the end of a run. Finishes are available to match the base finishes of Nevi™ Link benches. Product is UL Listed.

Notes

End Caps-Basic Cable Trough are for use with height adjustable benching solutions with the basic cable trough (BCT) wire management option.

For height adjustable benching solutions with the enhanced cable trough (ECT) wire management option, see the End Caps-Enhanced Cable Trough (DU4B., DU4S.).

For back-to-back applications, specify end cap-2 per box (EC) option. End caps are placed on each end of the run.

For 120° applications, specify 1 option of 2 per box (EC) and 1 option of 1 per box (EF) for a total of 3 end caps.

Dimensions

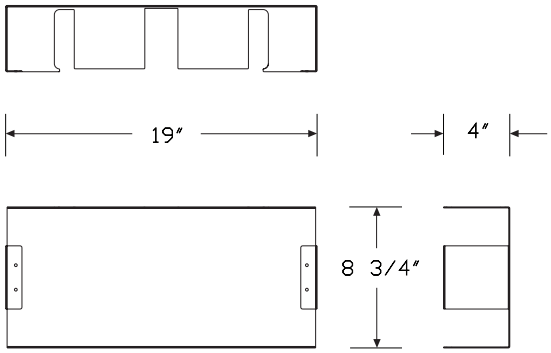

Specification Information

Step 1.

DY4

Step 2. End Cap Quantity

EC.	end cap - 2 per box

Prices for Steps 1-2.

DY4EC.	$218

Step 3. Finish

Metallic Paint

611	beige mist metallic (CP)	+$0
613	silver (CP)	+$0
SNA	satin aluminum	+$30
SNB	satin bronze	+$30
SNC	satin carbon	+$30

Sand Texture Paint

BK	black	+$0
UBK	ultra black (CP)	+$0

Smooth Paint

G1	graphite (CP)	+$0
8Q	folkstone grey (CP)	+$0
91	white (CP)	+$0
98	studio white (CP)	+$0
WL	warm stone (CP)	+$0
WN	warm grey neutral	+$0

Connecting Plate - Basic Cable Trough DY4CP.

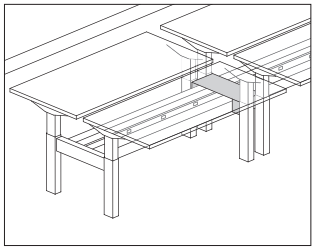

Product Information

Description

This cover plate creates a clean and finished aesthetic where bench sections come together. Finishes are available to match the base finishes of Nevi™ Link benches. Package contains 1 connecting plate. Product is UL Listed.

Notes

Connecting Plate-Basic Cable Trough are for use with height adjustable benching solutions with the basic cable trough (BCT) wire management option.

For height adjustable benching solutions with the enhanced cable trough (ECT) wire management option, see the Connecting Plate-Enhanced Cable Trough (DU4B., DU4S.).

Connecting plate is required to connect 1 bench section to another section. The number of connecting plates needed in a run is 1 less than the number of bench sections in the run.

Dimensions

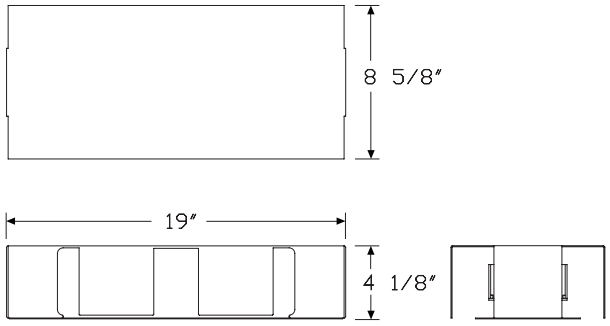

Specification Information

Step 1.

DY4

Step 2. Connecting Plate or End Cap

CP.	connecting plate (between tables) 1x box	

Prices for Steps 1-2.

DY4CP.		$244

Step 3. Finish

Metallic Paint

611	beige mist metallic (CP)	+$0
613	silver (CP)	+$0
SNA	satin aluminum	+$30
SNB	satin bronze	+$30
SNC	satin carbon	+$30

Sand Texture Paint

BK	black	+$0

Smooth Paint

8Q	folkstone grey (CP)	+$0
91	white (CP)	+$0
98	studio white (CP)	+$0
G1	graphite (CP)	+$0
WL	warm stone (CP)	+$0
WN	warm grey neutral	+$0

Single End Cap - Enhanced Cable Trough DU4B.

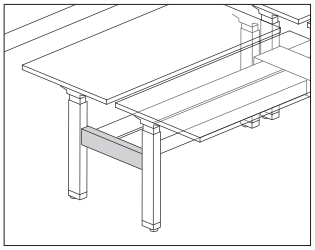

Product Information

Description

These cover plates create a clean and finished aesthetic at the end of runs. Finishes are available to match the base finishes of Renew™ Link and Nevi™ Link benches. Product is UL Listed.

Notes

For single sided bench runs, specify single sided (DU4S.EC). Single sided end caps (DU4S.EC) do not work with Nevi Link. For back to back bench runs, specify back to back (DU4B.EC).

Only 1 set of end caps needed per run. End caps are placed on each end of the run.

End Caps-Enhanced Cable Trough are for use with height adjustable benching solutions with the enhanced cable trough (ECT) wire management option.

For height adjustable benching solutions with the basic cable trough (BCT) wire management option, see the End Caps-Basic Cable Trough (DY4EC., DY4EF.).

Dimensions

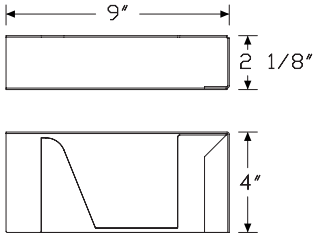

Single Sided

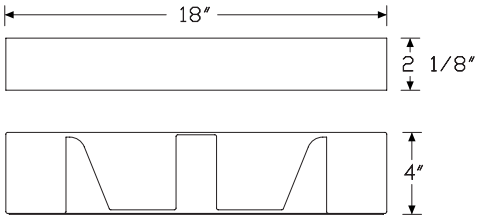

Back to Back

Specification Information

Step 1.

DU4

Step 2. Single Sided or Back to Back

B.	back to back

Step 3. End Cap Quantity

EF	end cap - 1 per box

Prices for Steps 1-3.

DU4B.	**EF**	$128

Step 4. Finish

Metallic Paint		
611	beige mist metallic (CP)	+$0
613	silver (CP)	+$0
SNA	satin aluminum	+$30
SNB	satin bronze	+$30
SNC	satin carbon	+$30
Sand Texture Paint		
BK	black	+$0
UBK	ultra black (CP)	+$0
Smooth Paint		
8Q	folkstone grey (CP)	+$0
91	white (CP)	+$0
98	studio white (CP)	+$0
G1	graphite (CP)	+$0
WL	warm stone (CP)	+$0
WN	warm grey neutral	+$0

Screen, Trough Mounted

DU8E.
DU8F.
DU8G.
DU8L.

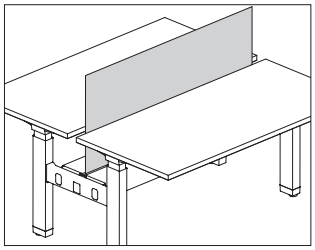

Product Information

Description

This screen provides privacy between workstations and can create privacy and boundary from adjacent work areas. Installed height of all screen tops is 46″. Screens are tackable fabric, laminate, or glass. Attachment hardware included.

Notes

Finish for glass screen hardware is always anodized (AN).

Back to back screen (BB) to be used with back to back bench applications.

Gallery screens (BG, SG) to be used on the end of back to back or single sided bench applications, respectively, and in conjunction with end of run gallery panels (DU9R.).

For use with boundary gallery panel (DU9B.) in single sided applications, specify single sided boundary gallery screen (SG). Single sided gallery (DU8x.SG) and single sided boundary (DU8x.SB) screens do not work with Nevi™ Link.

Screen accepts Customer's Own Material (COM). Yardage is estimated for nondirectional 54″-wide fabrics.

For vertical fabric direction (T):

Application-Width—Yardage

SG24—1.45
SG30—1.45
SB48—1.45
BG48—1.45
BB48—2.14

For horizontal fabric direction (R):

Application-Width—Yardage

SG24—0.97
SG30—1.14
SB48—1.71
SB54—1.90
SB60—2.07
SB66—2.27
SB72—2.46
BG48—1.71
BG60—2.07
BB48—3.15
BB54—3.52
BB60—3.91
BB66—4.28
BB72—4.67

For information on multiple quantities or directional fabrics, contact COM Department. See Order Information in Appendices.

Dimensions

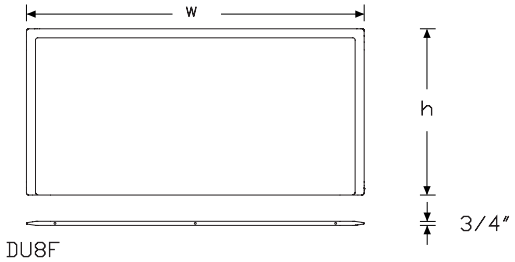

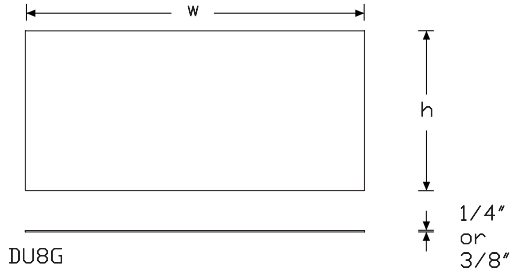

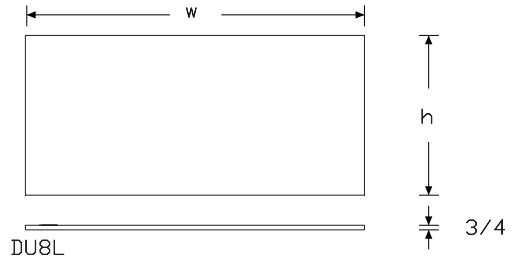

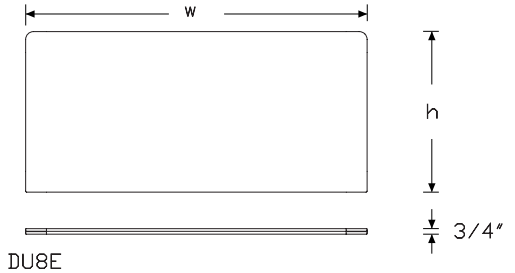

Specification Information

Step 1.

DU8

Step 2. Edge

F. Pari fabric screen
G. glass
E. flat edge fabric screen
L. high-pressure laminate

Step 3. Application

For Pari fabric screen (F.) or flat edge fabric screen (E.)

SG single side gallery
SB single side boundary
BG back to back gallery
BB back to back

For high-pressure laminate (L.)

BB back to back

For glass (G.)

BB back to back

Step 4. Width

For single side gallery (SG)

24 24″ wide
30 30″ wide

For single side boundary (SB)

48 48″ wide
54 54″ wide
60 60″ wide
66 66″ wide
72 72″ wide

For back to back gallery (BG)

48 48″ wide
60 60″ wide

For back to back (BB)

48 48″ wide
54 54″ wide
60 60″ wide
66 66″ wide
72 72″ wide

For back to back (BB)

48 48″ wide
60 60″ wide
72 72″ wide

Step 5. Surface Material

For Pari fabric screen (F.) or flat edge fabric screen (E.) with 24″ wide (24), 48″ wide (48), or 30″ wide (30)

T tackable fabric
R tackable fabric, horizontal

For Pari fabric screen (F.) or flat edge fabric screen (E.) with 54″ wide (54), 60″ wide (60), 66″ wide (66), or 72″ wide (72)

R tackable fabric, horizontal

For glass (G.)

5A opal etched - 1/4″ thick
C3 clear glass - 3/8″ thick
G3 opal glass - 3/8″ thick
N3 no glass- for customer's own glass 3/8″
NN no glass- for customer's own glass 1/4″
TR clear glass - 1/4″ thick

For high-pressure laminate (L.)

L high-pressure laminate/thermoplastic edge
U high-pressure laminate/universal edge

Prices for Steps 1-5.

			5A	L	U	T	C3	R
DU8F.	SG	24	—	—	—	$855	—	830
		30	—	—	—	$1161	—	1161
	SB	48	—	—	—	$1245	—	1245
		54	—	—	—	—	—	$1327
		60	—	—	—	—	—	$1410
		66	—	—	—	—	—	$1492
		72	—	—	—	—	—	$1657
	BG	48	—	—	—	$1245	—	1245
		60	—	—	—	—	—	$1327
	BB	48	—	—	—	$1989	—	1989
		54	—	—	—	—	—	$2114
		60	—	—	—	—	—	$2237
		66	—	—	—	—	—	$2359
		72	—	—	—	—	—	$2485

			5A	L	U	T	C3	R
DU8G.	**BB**	**48**	$1407	—	—	—	1863	—
		60	$1771	—	—	—	2468	—
		72	$2172	—	—	—	3074	—

			G3	N3	NN	TR
DU8G.	**BB**	**48**	$2427	417	408	1135
		60	$2708	449	449	1538
		72	$3317	517	505	1943

			5A	L	U	T	C3	R
DU8E.	**SG**	**24**	—	—	—	$186	—	178
		30	—	—	—	$525	—	505
	SB	**48**	—	—	—	$608	—	589
		54	—	—	—	—	—	$674
		60	—	—	—	—	—	$787
		66	—	—	—	—	—	$901
		72	—	—	—	—	—	$1013
	BG	**48**	—	—	—	$608	—	589
		60	—	—	—	—	—	$702
	BB	**48**	—	—	—	$1324	—	1324
		54	—	—	—	—	—	$1452
		60	—	—	—	—	—	$1578
		66	—	—	—	—	—	$1686
		72	—	—	—	—	—	$1795

			5A	L	U	T	C3	R
DU8L.	**BB**	**48**	—	$940	916	—	—	—
		54	—	$981	956	—	—	—
		60	—	$1023	998	—	—	—
		66	—	$1114	1086	—	—	—
		72	—	$1209	1179	—	—	—

Step 6. Hardware Color

For Pari fabric screen (F.), flat edge fabric screen (E.), or high-pressure laminate (L.)

NNN	none	+$0

For glass (G.)

AN	anodized	+$0

Step 7. Fabric

For Pari fabric screen (F.) or flat edge fabric screen (E.) with 24″ wide (24), or 30″ wide (30)

Price Category 1	+$0
Price Category 2	+$17
Price Category 3	+$41
Price Category 4	+$72
Price Category 5	+$120
Price Category B	+$79
Price Category C	+$79
Price Category E	+$262

For Pari fabric screen (F.) or flat edge fabric screen (E.) with 48″ wide (48)

Price Category 1	+$0
Price Category 2	+$22
Price Category 3	+$53
Price Category 4	+$91
Price Category 5	+$154
Price Category B	+$101
Price Category C	+$101
Price Category E	+$262

For Pari fabric screen (F.) or flat edge fabric screen (E.) with 54″ wide (54), or 60″ wide (60)

Price Category 1	+$0
Price Category 2	+$28
Price Category 3	+$66
Price Category 4	+$114
Price Category 5	+$192
Price Category B	+$126
Price Category C	+$126
Price Category E	+$262

For Pari fabric screen (F.) or flat edge fabric screen (E.) with 66″ wide (66)

Price Category E	+$262
Price Category C	+$143
Price Category B	+$143
Price Category 1	+$0
Price Category 2	+$31
Price Category 3	+$74
Price Category 4	+$130
Price Category 5	+$217

For Pari fabric screen (F.) or flat edge fabric screen (E.) with 72″ wide (72)	
Price Category E	+$262
Price Category C	+$143
Price Category B	+$143
Price Category 1	+$0
Price Category 2	+$34
Price Category 3	+$80
Price Category 4	+$140
Price Category 5	+$235

For Pari fabric screen (F.) or flat edge fabric screen (E.) with 48″ wide (48)	
Price Category E	+$262
Price Category C	+$155
Price Category B	+$155
Price Category 1	+$0
Price Category 2	+$38
Price Category 3	+$90
Price Category 4	+$157
Price Category 5	+$263

For Pari fabric screen (F.) or flat edge fabric screen (E.) with 54″ wide (54), or 60″ wide (60)	
Price Category E	+$262
Price Category C	+$234
Price Category B	+$234
Price Category 1	+$0
Price Category 2	+$52
Price Category 3	+$122
Price Category 4	+$212
Price Category 5	+$356

For Pari fabric screen (F.) or flat edge fabric screen (E.) with 66″ wide (66)	
Price Category 1	+$0
Price Category 2	+$59
Price Category 3	+$140
Price Category 4	+$245
Price Category 5	+$410
Price Category B	+$270
Price Category C	+$270
Price Category E	+$262

For Pari fabric screen (F.) or flat edge fabric screen (E.) with 72″ wide (72)	
Price Category 1	+$0
Price Category 2	+$65
Price Category 3	+$154
Price Category 4	+$266
Price Category 5	+$448
Price Category B	+$294
Price Category C	+$294
Price Category E	+$262

Step 8. Grain Direction

For high-pressure laminate (L.) with 48″ wide (48), or 54″ wide (54), or 60″ wide (60)		
VTG	vertical grain	+$0
HRG	horizontal grain	+$0

For high-pressure laminate (L.) with 66″ wide (66), or 72″ wide (72)		
HRG	horizontal grain	+$0

Step 9. Surface Finish

For high-pressure laminate/thermoplastic edge (L) or high-pressure laminate/universal edge (U)

125	natural maple (CP)	+$0
126	natural cherry (CP)	+$0
127	walnut (CP)	+$0
139	light ash (CP)	+$0
140	warm ash (CP)	+$0
76	light brown walnut	+$0
8Q	folkstone grey (CP)	+$0
91	white (CP)	+$0
98	studio white (CP)	+$0
CL	cool grey neutral	+$0
HP	light anigre	+$0
LBA	clear on ash (CP)	+$0
LBB	oak on ash (CP)	+$0
LBC	walnut on ash (CP)	+$0
LBF	neutral twill	+$0
LBJ	graphite twill	+$0
LBQ	white twill	+$0
LBR	phantom ecru	+$0
LBS	phantom cocoa	+$0
LBU	medium matte walnut (CP)	+$0
LBV	warm grey teak	+$0
LU	soft white	+$0
WL	warm stone (CP)	+$0
WN	warm grey neutral	+$0

Step 10. Edge Finish

For high-pressure laminate/thermoplastic edge (L)

125	natural maple (CP)	+$0
126	natural cherry (CP)	+$0
127	walnut (CP)	+$0
139	light ash (CP)	+$0
140	warm ash (CP)	+$0
UBK	ultra black (CP)	+$0
76	light brown walnut	+$0
8Q	folkstone grey (CP)	+$0
91	white (CP)	+$0
98	studio white (CP)	+$0
CL	cool grey neutral	+$0
HF	inner tone light	+$0
HP	light anigre	+$0
LBA	clear on ash (CP)	+$0
LBR	phantom ecru	+$0
LBS	phantom cocoa	+$0
LBU	medium matte walnut (CP)	+$0
LBV	warm grey teak	+$0
LBB	oak on ash (CP)	+$0
LBC	walnut on ash (CP)	+$0
LBF	neutral twill	+$0
LBJ	graphite twill	+$0
LBQ	white twill	+$0
LU	soft white	+$0
WL	warm stone (CP)	+$0
WN	warm grey neutral	+$0

For high-pressure laminate/universal edge (U)

PLY	plywood edge	+$50

Gallery Panel

DU9B.
DU9R.

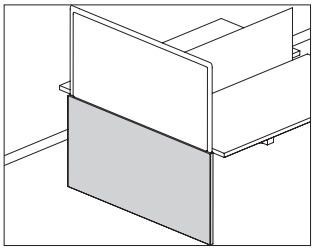

Product Information

Description

This gallery panel creates a finished and polished look to end of run or single sided applications. It also creates boundary for a single sided bench and an adjacent work space or aisle. The panel is laminate with thermoplastic edge, laminate with universal edge, or veneer with veneer edge. Edges are square. Glides have ½″ of leveling adjustment.

Notes

For end of run application, specify end of run panel (DU9R.).

For single sided application on back side of work surface, specify single sided boundary panel (DU9B.). Single sided boundary gallery panel (DU9x.B) does not work with Nevi™ Link.

When specifying 29″ gallery panel with inserts to be used with 17″-high fabric screen (Pari or flat edge), overall combined height will align with trough-mounted screens at 46″ high. Order 17″-high fabric screen separately.

Grain direction is vertical on veneer, wood-grain and directional laminates.

Wood-grain and directional laminates are not available on 66″-72″ wide gallery panels and are not a recommended application when using ZZ open line wood-grain or directional laminates.

Dimensions

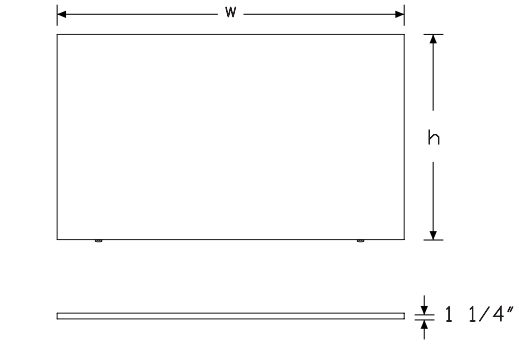

DU9R

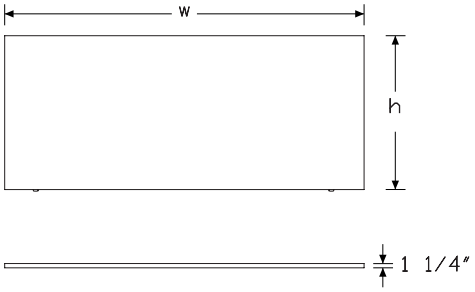

DU9B

Specification Information

Step 1.

DU9

Step 2. Edge

R.	end of run gallery panel
B.	single sided boundary gallery panel (along back edge)

Step 3. Width

For end of run gallery panel (R.)

24	24″ wide - front edge to back edge for single sided bench
30	30″ wide - front edge to back edge for single sided bench
48	48″ wide - front edge to front edge for 24″ deep back to back
60	60″ wide - front edge to front edge for 30″ deep back to back

For single sided boundary gallery panel (along back edge) (B.)

48	48″ wide
54	54″ wide
60	60″ wide
66	66″ wide
72	72″ wide

Step 4. Height

29	29″ tall
46	29″ tall with inserts to be used with 17″ tall fabric screens (Pari or Flat Edge)

Step 5. Surface Material

L	high-pressure laminate top/thermoplastic edge
W	veneer top/veneer edge
U	high-pressure laminate/universal edge

Prices for Steps 1-5.

			L	W	U
DU9R.	**24**	**29**	$356	812	356
		46	$451	906	451
	30	**29**	$469	1023	469
		46	$564	1117	564
	48	**29**	$745	1588	745
		46	$841	1684	841
	60	**29**	$955	2020	955
		46	$1060	2114	1060

			L	W	U
DU9B.	**54**	**29**	$999	2040	970
		46	$1107	2140	1043
	48	**29**	$853	1735	829
		46	$964	1840	937
	60	**29**	$1094	2238	1064
		46	$1209	2344	1174
	66	**29**	$1264	2568	1226
		46	$1372	2676	1334
	72	**29**	$1401	2857	1362
		46	$1512	2965	1467

Step 6.

Surface Finish

For 24″ wide - front edge to back edge for single sided bench (24), 48″ wide (48), 30″ wide - front edge to back edge for single sided bench (30), 54″ wide (54), 48″ wide - front edge to front edge for 24″ deep back to back (48), 60″ wide (60), or 60″ wide - front edge to front edge for 30″ deep back to back (60) with high-pressure laminate top/thermoplastic edge (L), or high-pressure laminate/universal edge (U)

125	natural maple (CP)	+$0
126	natural cherry (CP)	+$0
127	walnut (CP)	+$0
139	light ash (CP)	+$0
140	warm ash (CP)	+$0
76	light brown walnut	+$0
8Q	folkstone grey (CP)	+$0
91	white (CP)	+$0
98	studio white (CP)	+$0
CL	cool grey neutral	+$0
HF	inner tone light	+$0
HP	light anigre	+$0
LBA	clear on ash (CP)	+$0
LBB	oak on ash (CP)	+$0
LBC	walnut on ash (CP)	+$0
LBF	neutral twill	+$0
LBJ	graphite twill	+$0
LBQ	white twill	+$0
LBR	phantom ecru	+$0
LBS	phantom cocoa	+$0
LBU	medium matte walnut (CP)	+$0
LBV	warm grey teak	+$0
LT	light tone	+$0
LU	soft white	+$0
WL	warm stone (CP)	+$0
WN	warm grey neutral	+$0

Surface Finish

For 66" wide (66) or 72" wide (72) with high-pressure laminate top/ thermoplastic edge (L), or high-pressure laminate/universal edge (U)

8Q	folkstone grey (CP)	+$0
91	white (CP)	+$0
98	studio white (CP)	+$0
CL	cool grey neutral	+$0
LU	soft white	+$0
WL	warm stone (CP)	+$0
WN	warm grey neutral	+$0

Surface/Edge Finish

For veneer top/veneer edge (W)

2U	light brown walnut	+$85
40	dark brown walnut	+$85
CHD	noble cherry	+$85
ET	clear on ash	+$85
EU	oak on ash	+$85
EV	walnut on ash	+$85
EW	medium matte walnut	+$85
UL	natural maple	+$85
WHN	natural white oak	+$85

Step 7. Edge Finish

For high-pressure laminate top/thermoplastic edge (L)

125	natural maple (CP)	+$0
126	natural cherry (CP)	+$0
127	walnut (CP)	+$0
139	light ash (CP)	+$0
140	warm ash (CP)	+$0
76	light brown walnut	+$0
8Q	folkstone grey (CP)	+$0
91	white (CP)	+$0
98	studio white (CP)	+$0
CL	cool grey neutral	+$0
G1	graphite (CP)	+$0
HF	inner tone light	+$0
HP	light anigre	+$0
LBA	clear on ash (CP)	+$0
LBB	oak on ash (CP)	+$0
LBC	walnut on ash (CP)	+$0
LBF	neutral twill	+$0
LBJ	graphite twill	+$0
LBQ	white twill	+$0
LBR	phantom ecru	+$0
LBS	phantom cocoa	+$0
LBU	medium matte walnut (CP)	+$0
LBV	warm grey teak	+$0
LU	soft white	+$0
UBK	ultra black (CP)	+$0
WL	warm stone (CP)	+$0
WN	warm grey neutral	+$0

For high-pressure laminate/universal edge (U)

PLY	plywood edge	+$50

Step 8. Bracket Finish

Metallic Paint

611	beige mist metallic (CP)	+$0
613	silver (CP)	+$0
SNA	satin aluminum	+$10
SNB	satin bronze	+$10
SNC	satin carbon	+$10

Sand Texture Paint

BK	black	+$0
UBK	ultra black (CP)	+$0

Smooth Paint		
8Q	folkstone grey (CP)	+$0
91	white (CP)	+$0
98	studio white (CP)	+$0
G1	graphite (CP)	+$0
WL	warm stone (CP)	+$0
WN	warm grey neutral	+$0

Single Sided Gallery Panel Trim Piece DU12.

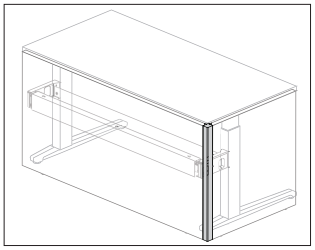

Product Information

Description

This painted metal trim piece fills the gap between the end-of-run gallery panel and the boundary panel attached to the rear of the work station in single-sided applications. Package contains 1 trim piece.

Dimensions

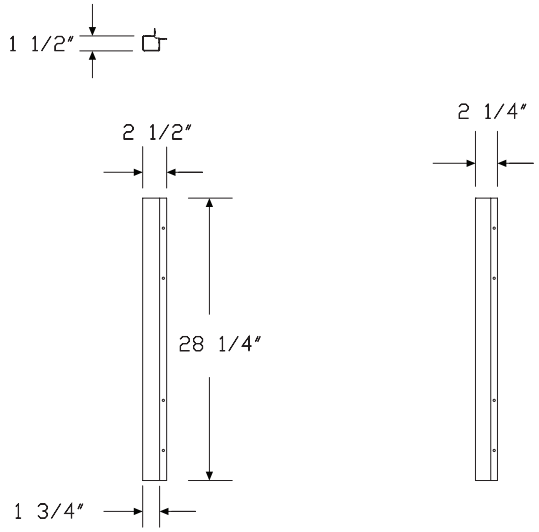

Specification Information

Step 1.

DU12. A		$234

Step 2. Finish

Metallic Paint		
611	beige mist metallic (CP) A	+$0
613	silver (CP) A	+$0
SNA	satin aluminum A	+$10
SNB	satin bronze A	+$10
SNC	satin carbon A	+$10
Sand Texture Paint		
BK	black A	+$0
UBK	ultra black (CP) A	+$0
Smooth Paint		
8Q	folkstone grey (CP) A	+$0
91	white (CP) A	+$0
98	studio white (CP) A	+$0
G1	graphite (CP) A	+$0
WL	warm stone (CP) A	+$0
WN	warm grey neutral A	+$0

Connect™-Power Entry, 4-Circuit DU1351

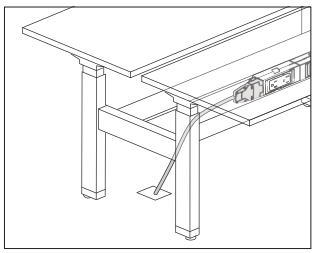

Product Information

Description

This power entry connects a building's electrical from a wall, floor, or column to the end of a 4-circuit junction block and distributes up to 4 20-amp circuits. UL Listed for use with Renew™ Link and Nevi™ Link in the US and Canada.

Notes

Renew Link modular power products are only compatible with other Renew Link modular products, or with Connect™ 4-circuit modular components. Note that the UL listing for Renew Link is no longer applicable when connecting Renew Link power to Connect power.

Power entry can be field cut to the appropriate length.

For San Francisco, specify ⅜″ flex metallic conduit option (C).

Finish color on liquid tight conduit is black. Finish color on metallic conduit is silver.

A licensed electrician must wire the power entry to the building's electrical system.

Dimensions

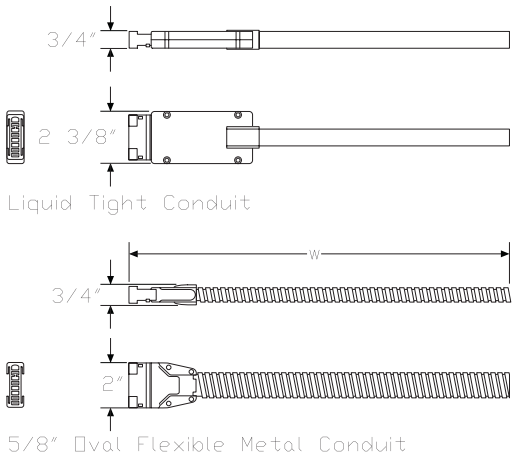

Specification Information

Step 1.

DU1351.

Step 2. Length

06	6′ long
12	12′ long
18	18′ long
24	24′ long

Step 3. Conduit Type

L	liquid tight conduit
C	⅜″ flex metallic conduit

Prices for Steps 1-3.

		L	C
DU1351.	**06**	$306	306
	12	$438	438
	18	$580	570
	24	$730	730

Connect™-Power Entry, 4-Circuit, New York City DU1352

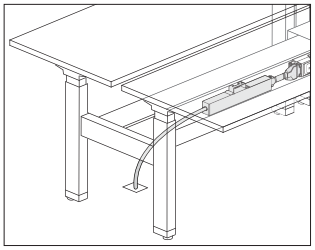

Product Information

Description

This power entry connects a building's electrical from a wall, floor, or column to the end of a 4-circuit junction block and distributes up to 4 20-amp circuits. It includes a junction box and harness. It is UL Listed for use with Renew™ Link and Nevi™ Link in the US and Canada.

Notes

Renew Link modular power products are only compatible with other Renew Link modular products, or with Connect™ 4-circuit modular components. Note that the UL listing for Renew Link is no longer applicable when connecting Renew Link power to Connect power.

Power entry comes with an 8″ harness.

A licensed electrician must wire the power entry to the building's electrical system.

For linear bench sections, the NYC Power Entry (DU1352.08) can only fit, and must be installed in, 60″-wide and wider sections. For 120° bench sections, the NYC Power Entry (DU1352.08) can only fit, and must be installed in, 54″-wide and wider sections.

Dimensions

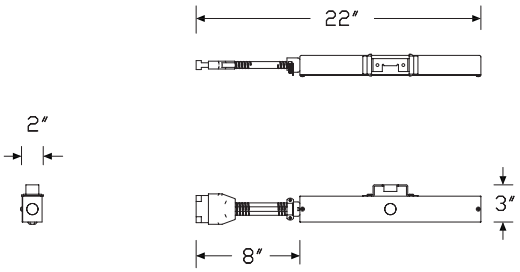

Specification Information

Step 1.

DU1352.08	$482

Connect™-Junction Block to Junction Block Jumper, 4-Circuit DU1353

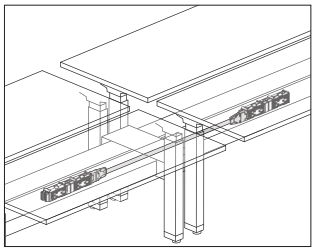

Product Information

Description

This adjustable power jumper distributes up to 4 20-amp circuits between 2 junction blocks. One end of the jumper extends an additional 3″ when connecting to an adjacent junction block. It is UL Listed for use with Renew™ Link and Nevi™ Link in the US and Canada.

Notes

Renew Link modular power products are only compatible with other Renew Link modular products, or with Connect™ 4-circuit modular components. Note that the UL listing for Renew Link is no longer applicable when connecting Renew Link power to Connect power.

Finish on 5/8″ oval metallic conduit is silver.

Dimensions

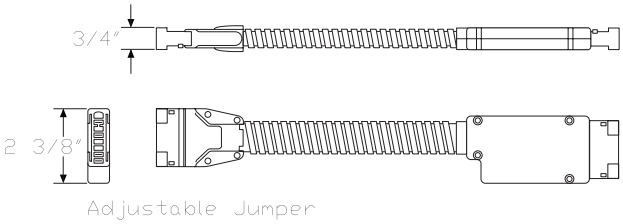

Specification Information

Step 1.

DU1353.

Step 2. Width

24	24″ wide
30	30″ wide
36	36″ wide
42	42″ wide
48	48″ wide
54	54″ wide
60	60″ wide

Step 3. Type

A	adjustable jumper

Prices for Steps 1-3.

		A
DU1353.	**24**	$181
	30	$197
	36	$211
	42	$220
	48	$224
	54	$246
	60	$255

Connect™-Block Connector, 4-Circuit DU1354

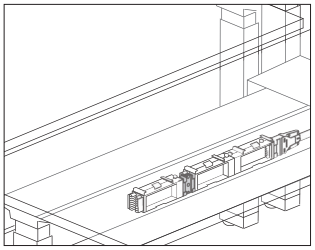

Product Information

Description

This connector connects 2 junction blocks together. Finish is black. Attachment hardware included. It is UL Listed for use with Renew™ Link and Nevi™ Link in the US and Canada.

Notes

Renew Link modular power products are only compatible with other Renew Link modular products, or with Connect™ 4-circuit modular components. Note that the UL listing for Renew Link is no longer applicable when connecting Renew Link power to Connect power.

Dimensions

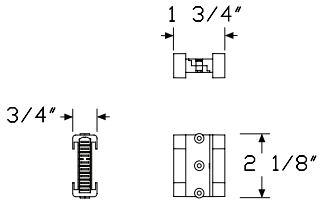

Short Receptacle-to-Receptacle Block Connector

Specification Information

Step 1.

DU1354.S	$98

Connect™-Junction Block, 4-Circuit DU1358

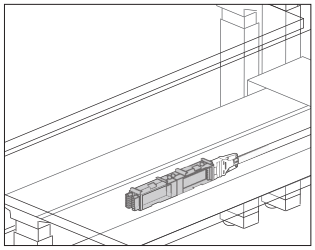

Product Information

Description

This junction block attaches to the electrical cross bar and accepts 4-circuit receptacles for access and distribution of up to 4 20-amp circuits. It has connection points at both ends for attaching a power entry, a 4-circuit power jumper, or block-to-block connector. Finish is black. It is UL Listed for use with Renew™ Link and Nevi™ Link in the US and Canada. Attachment bracket and hardware included.

Notes

Renew Link modular power products are only compatible with other Renew Link modular products, or with Connect™ 4-circuit modular components. Note that the UL listing for Renew Link is no longer applicable when connecting Renew Link power to Connect power.

For back-to-back applications, specify the 2-duplex block (DU1358.DB) or the 1-duplex block (DU1358.SB).

Order duplex receptacle, 4-circuit (DU1355.) separately.

To route power from building to junction block, order 4-circuit power entry (DU1351. or DU1352.) separately.

To route power between junction blocks, order junction block to junction block jumper (DU1353.) separately.

To connect 2 junction blocks together, order a short block to block connector (DU1354.S) separately.

Dimensions

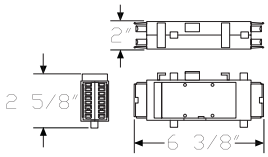

Single, Back-to-Back Junction Block

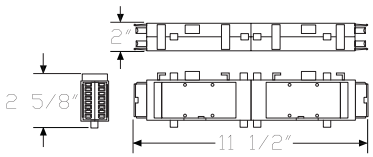

Double, Back-to-Back Junction Block

Specification Information

Step 1.

DU1358.

Step 2. Junction Block Type

SB single back-to-back junction block

DB double back-to-back junction block

Step 3. Attachment Hardware

B short 90° attachment to underside of surface

Prices for Steps 1-3.

		B
DU1358.	**SB**	$191
	DB	$159

Connect™-Duplex Receptacle, 4-Circuit

DU1355

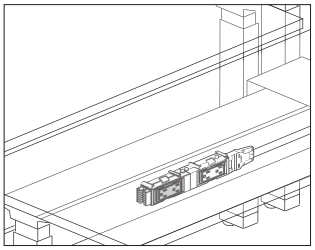

Product Information

Description

This 15- or 20-amp duplex receptacle attaches to a junction block to provide electrical access. Finish is black. Package of 1. It is UL Listed for use with Renew™ Link and Nevi™ Link in the US and Canada.

Notes

Renew Link modular power products are only compatible with other Renew Link modular products, or with Connect™ 4-circuit modular components. Note that the UL listing for Renew Link is no longer applicable when connecting Renew Link power to Connect power.

Receptacle is labeled as I, II, III, or IV for circuit identification.

Order junction block (DU1358.) separately.

Dimensions

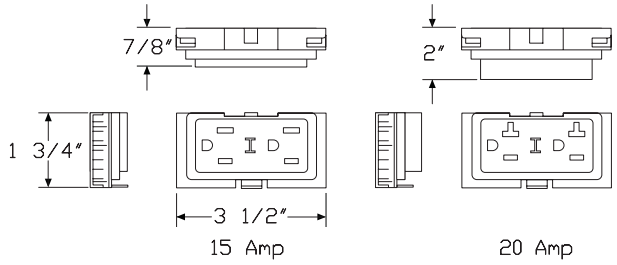

Specification Information

Step 1.

DU1355.

Step 2. Amps

15	15 amp
20	20 amp

Step 3. Circuit

1	circuit I
2	circuit II
3	circuit III
4	circuit IV

Prices for Steps 1-3.

		1	2	3	4
DU1355.	**15**	$50	50	50	50
	20	$60	60	60	60

Logic G1000 Grommet Mounted Electrical Distributor

Y1425.

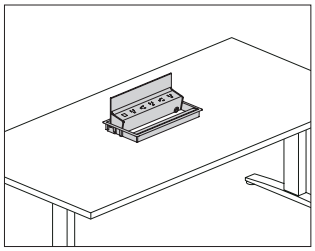

Product Information

Description

This Logic Power Access Solutions™ grommet mounted electrical distributor comes in several widths and configurations of simplex receptacles and USB-A and USB-C charging ports. The unit is powered using a standard power cord with plug end, or an IEC connector when used with Renew™ Sit-to-Stand tables. An integrated cord keeper at the face of the unit captures data cords. The unit pivots from a closed position to 135° allowing easy access to power and data cords stored beneath the unit. Product is UL listed.

Notes

Field cutting of grommet cutout is possible.

IEC connector for Renew power type (C) includes short cord designed to connect to the Renew table power cord through-leg option. Actual cord length may vary.

Simplex receptacles have alternating orientation and greater than normal plug spacing to accommodate most plug types.

USB ports provide a combined 20 watts of power to charge most devices and tablets at full speed. USB-C provides 15 watts of power and USB-A provides 10 watts of power individually. When using the USB-C and USB-A ports simultaneously, USB-C remains at 15 watts and USB-A reduces to 5 watts.

Refer to Renew Sit-to-Stand Tables planning guide for specific application information.

20′ cord/conduit length (20) is recommended for Exclave® applications.

Dimensions

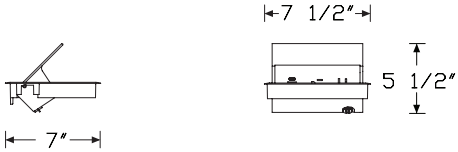

2 simplex receptacles with 1 powered USB A/C combo (H)

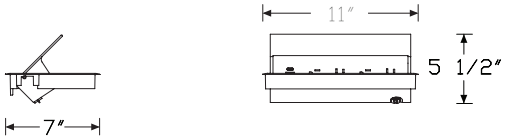

4 simplex receptacles with 1 powered USB A/C combo (I)

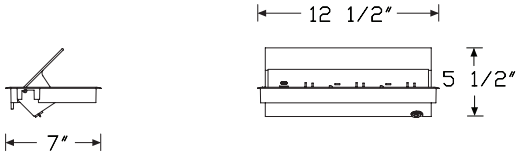

5 simplex receptacles with 1 powered USB A/C combo (J)

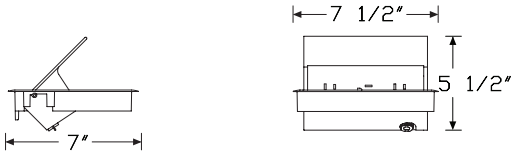

3 simplex receptacles (E)

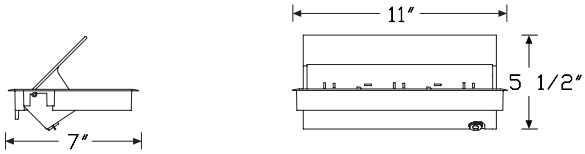

5 simplex receptacles (F)

Specification Information

Step 1.

Y1425.

Step 2. Configuration

H	2 simplex receptacles, 1 powered USB A/C Combo
I	4 simplex receptacles, 1 powered USB A/C Combo
E	3 simplex receptacles
F	5 simplex receptacles

Step 3. Power Type

A	power cord with plug end
C	IEC connector for Renew Tables

Step 4. Cord/Conduit Length

For power cord with plug end (A)

03	3′ cord/conduit
06	6′ cord/conduit
10	10′ cord/conduit
20	20′ cord/conduit

For IEC connector for Renew Tables (C)

03	3′ cord/conduit

Prices for Steps 1-4.

			03	06	10	20
Y1425.	**H**	**A**	$900	900	914	929
		C	$914	—	—	—
	I	**A**	$1042	1042	1059	1074
		C	$1059	—	—	—
	E	**A**	$693	693	706	718
		C	$706	—	—	—
	F	**A**	$836	836	851	867
		C	$851	—	—	—

Step 5. Finish

613	silver (CP)	+$0
91	white (CP) A	+$0
98	studio white (CP) A	+$0
BK	black A	+$0
G1	graphite (CP) A	+$0
UBK	ultra black (CP)	+$0

External Cable Manager

DU11B.
DU11S.

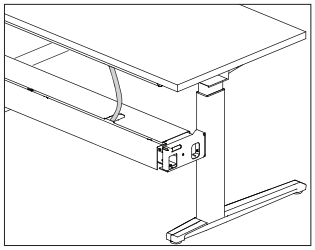

Product Information

Description

This cable manager seamlessly routes cables from the central trough of height adjustable benching (Renew™ Link or Nevi™ Link) up to the work surface as the surface moves up and down. 1 length fits all leg mechanism types. Installation hardware included.

Dimensions

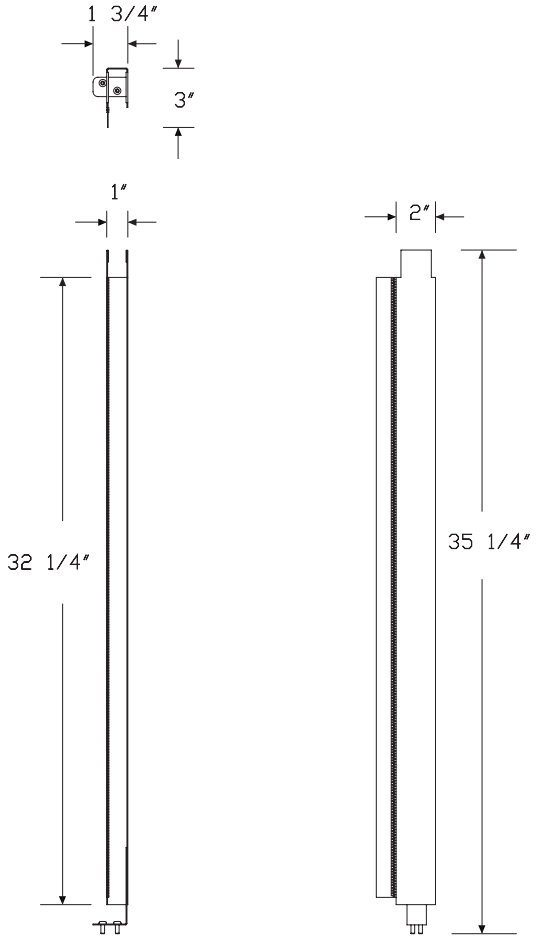

Specification Information

Step 1.

DU11

Step 2. Attachment

B. high density trough attachment

S. worksurface attachment

Prices for Steps 1-2.

DU11B.	$282
DU11S.	$282

Step 3. Finish

Price Category 4	+$0
Price Category 5	+$0

Height-Adjustable Vertical Cable Manager

DU15B.
DU15S.

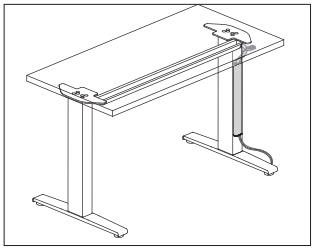

Product Information

Description

This cable manager organizes cords from the power source to the underside of a worksurface on height-adjustable products. It attaches with magnets to the height-adjustable leg column and the mesh sleeve travels up and down with the worksurface. Cable manager is compatible with all height-adjustable leg columns. Installation hardware included.

Dimensions

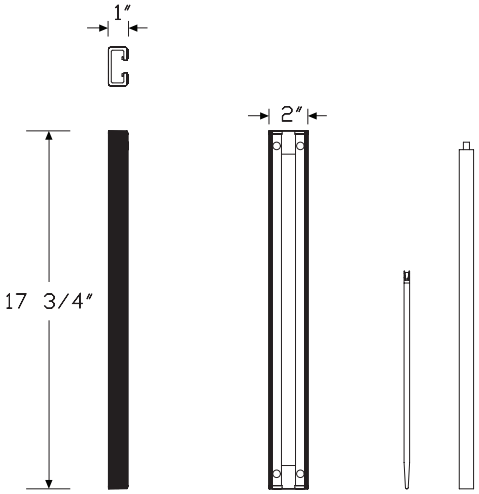

Specification Information

Step 1.

DU15 A

Step 2. Attachment

B.	cable tray attachment A
S.	worksurface attachment A

Step 3. Table Mechanism

D	electric extended range
E	electric standard range

Prices for Steps 1-3.

DU15B.	**D**	$169
	E	$169
DU15S.	**D**	$176
	E	$176

Step 4. Finish

613	silver (CP)	+$0
UBK	ultra black (CP)	+$0
BK	black	+$0
91	white (CP)	+$0

Index by Product Name

Nevi™ Link

Cable Management Channel	page(s) 39
Cable Management Trough	40
Cable Management Trough, Work Surface Suspended	42
Cable Manager	41
Connecting Plate - Basic Cable Trough	13
Connecting Plate - Enhanced Cable Trough	15
Connect™-Block Connector, 4-Circuit	30
Connect™-Duplex Receptacle, 4-Circuit	32
Connect™-Junction Block, 4-Circuit	31
Connect™-Junction Block to Junction Block Jumper, 4-Circuit	29
Connect™-Power Entry, 4-Circuit	27
Connect™-Power Entry, 4-Circuit, New York City	28
End Caps - Basic Cable Trough	12
End Caps - Enhanced Cable Trough	14
External Cable Manager	36
Gallery Panel	23
Height-Adjustable Vertical Cable Manager	43
Hinged Cable Trough	37
Logic Mini	33
Logic Mini Grommet	35
Nevi Link 120 Degree Height Adjustable Bench	9
Nevi Link Back-to-Back Rectangular Height Adjustable Bench	5
Screen, Trough Mounted	18
Single End Cap - Basic Cable Trough	17

Renew™ Link

Back to Back Trapezoid Height Adjustable Bench	page(s) 54
Connecting Plate - Basic Cable Trough	75
Connecting Plate - Enhanced Cable Trough	70
Connect™-Block Connector, 4-Circuit	90
Connect™-Duplex Receptacle, 4-Circuit	92
Connect™-Junction Block, 4-Circuit	91
Connect™-Junction Block to Junction Block Jumper, 4-Circuit	89
Connect™-Power Entry, 4-Circuit	87
Connect™-Power Entry, 4-Circuit, New York City	88
End Caps - Basic Cable Trough	74
End Caps - Enhanced Cable Trough	69
External Cable Manager	95
Gallery Panel	82
Height-Adjustable Vertical Cable Manager	96
Logic G1000 Grommet Mounted Electrical Distributor	93
Renew Link Back-to-Back Rectangular Height Adjustable Bench	47
Renew™ Link 120 Degree Height Adjustable Bench	65
Renew™ Link Back-to-Back Leg Shroud	72
Screen, Trough Mounted	77
Single End Cap - Enhanced Cable Trough	76
Single Sided Gallery Panel Trim Piece	86
Single Sided Rectangular Height Adjustable Bench	60

Index by Product Number

AO382.	Cable Management Trough, Work Surface Suspended	page(s) 42
DU1AS. DU1AT.	Single Sided Rectangular Height Adjustable Bench	60
DU2AS. DU2AT.	Renew Link Back-to-Back Rectangular Height Adjustable Bench	47
DU2TS. DU2TT.	Back to Back Trapezoid Height Adjustable Bench	54
DU3AS. DU3AT.	Renew™ Link 120 Degree Height Adjustable Bench	65
DU4B.	Connecting Plate - Enhanced Cable Trough	15, 70
DU4B.	End Caps - Enhanced Cable Trough	14, 69
DU4B.	Single End Cap - Enhanced Cable Trough	76
DU4C.	Renew™ Link Back-to-Back Leg Shroud	72
DU4S.	Connecting Plate - Enhanced Cable Trough	15, 70
DU4S.	End Caps - Enhanced Cable Trough	14, 69
DU8E. DU8F. DU8G. DU8L.	Screen, Trough Mounted	18, 77
DU9B. DU9R.	Gallery Panel	23, 82
DU11B. DU11S.	External Cable Manager	36, 95
DU12.	Single Sided Gallery Panel Trim Piece	86
DU15B. DU15S.	Height-Adjustable Vertical Cable Manager	43, 96
DU1351	Connect™-Power Entry, 4-Circuit	27, 87
DU1352	Connect™-Power Entry, 4-Circuit, New York City	28, 88
DU1353	Connect™-Junction Block to Junction Block Jumper, 4-Circuit	29, 89
DU1354	Connect™-Block Connector, 4-Circuit	30, 90
DU1355	Connect™-Duplex Receptacle, 4-Circuit	32, 92
DU1358	Connect™-Junction Block, 4-Circuit	31, 91
DY2AS.	Nevi Link Back-to-Back Rectangular Height Adjustable Bench	5
DY3AS.	Nevi Link 120 Degree Height Adjustable Bench	9
DY4CP.	Connecting Plate - Basic Cable Trough	13, 75
DY4EC.	End Caps - Basic Cable Trough	12, 74
DY4EF.	Single End Cap - Basic Cable Trough	17
FT19C.	Cable Management Channel	39
FT199.	Cable Management Trough	40
FV695.	Cable Manager	41
Y1300.	Hinged Cable Trough	37
Y1412.	Logic Mini Grommet	35
Y1414.	Logic Mini	33
Y1425.	Logic G1000 Grommet Mounted Electrical Distributor	93

20-Day or Less/Assigned Lead-Time Order Information

20-Day or Less and Assigned Lead-Time Programs

20-day or less and assigned lead-time products are designed for established Herman Miller dealers with pre-approved credit.

Products are distributed from multiple manufacturing facilities across the United States. All products and options not designated by an Assigned Lead-Time icon A will ship in 20 business days or less after being acknowledged by Herman Miller. Products and options designated by an A are on the assigned lead-time program and will ship in 20 days, less than 20 days, or more than 20 days from order acknowledgement.

Ordering Procedure

Please place orders through Order Manager. If this is not available to you, place orders through mail or fax. Verbal purchase orders will not be accepted.

Order Entry fax number for Meridian®
Filing and Storage: (616) 846 9236.
Order Entry fax number for all other products:
(616) 654 3085.

For more information, contact your Customer Care representative at: (866) 854 3048 ext 3400.

Shipments and Delivery

Per Herman Miller Terms and Conditions.

Changes and Cancellation

Per Herman Miller Terms and Conditions.

Vary Easy Program

Program Overview

The Vary Easy program offers expanded product selections beyond what is available through our standard offering. From expanded material and finish lists, to size availability, to completely new product configurations, the Vary Easy program offers it all at standard pricing, warranty, and lead-time.

Specifying Vary Easy using Made-to-Measure Plus

Vary Easy products are now available by clicking the Vary Easy/ Options tile in the Made-to-Measure Plus tool.

Made-to-Measure Plus is a web-based tool available through Omni that takes the guesswork out of specifying products and service parts. It's quickly evolving to become your one-stop shop for specifying Herman Miller products and service parts, particularly customized product like Vary Easy and HM Options.

Vary Easy products are no longer published in marketing SIF for importing into specIT and other third-party specifiers. Specifying through the Made-to-Measure Plus tool allows us to make frequent updates and offer more complex products. It allows you to easily specify and price products and download SIF files to import into your specification tool. The acknowledgement process for Vary Easy products is the same as for any standard order. Vary Easy products ship with a standardized lead-time and are competitively priced.

For step-by-step instructions, reference the Made-to-Measure Plus page under Tools & Resources on Omni to watch the how-to video and to see how easy it is to specify Vary Easy products in Made-to-Measure Plus.

For Vary Easy product and specification questions, contact Product Services at 866 854 3048 (ext #1).

For technical questions about the Made-to-Measure Plus tool, contact Sales Technology Support at 866 854 3048 (ext #4) or sts@ hermanmiller.com.

Stain-to-Match Program

Program Overview

The Stain-to-Match program gives you the option of using veneer finishes that are not listed in the standard offering. The program allows Herman Miller to match a customer's existing recut or natural veneer, or create a new finish that is unique to an installation.

Specific information on approval, ordering, pricing, and warranty for the Stain-to-Match program is listed below. Questions and requests for assistance may be directed to Herman Miller Options at:

(800) 654 3910

Stain-to-Match Process

1. Fill out the Options Stain-to-Match Request Form and send along with a color sample (2" x 3" minimum) to the Herman Miller Options Applications Team at the address provided on the form. The form can be found on Omni.
2. Within 7-10 working days, Herman Miller Options will send a sample of the color-matched stain on Herman Miller veneer to the requester for the customer's signed approval.
3. If the sample meets the customer's approval, sign the reverse side of the sample, scan and email the approval to:
   options@hermanmiller.com.
4. After the stain has been approved, a formal quotation with special number and pricing can be provided, or the product can be specified through the Vary Easy program, if available. Work with the Options team on final product needs and how to specify.
5. A purchase order can then be placed.

Stain-to-Match Warranty

Herman Miller warrants its products to be free from defects in craftsmanship from the date of delivery for the applicable warranty period. Herman Miller is responsible for the physical properties of the veneers available through the Stain-to-Match program, which include:

STA: Stain-to-Match on Recut Ash
STC: Stain-to-Match on Cherry
STD: Stain-to-Match on Oak
STK: Stain-to-Match on Reltech Anigre (Geiger)
STP: Stain-to-Match on Maple
STU: Stain-to-Match on Walnut (Geiger)

See your specification tool for product specific finish offering limitations.

Customer's Own Material Order Information — Workspaces

Customer's Own Material

Program Overview

The Customer's Own Material (COM) program gives you the option of using textiles other than those listed. Herman Miller will test textiles for application to Herman Miller products and will process orders for those with approved COM textiles only. COM textiles are on assigned lead times.

Omni lists an overview of fabrics that have been tested and indicates whether or not they were approved for application to Herman Miller products.

Specific information on the terms and conditions, testing, approval, and ordering process for COM is listed below. Questions about the COM program and requests for assistance may be directed to your COM representative at:
(616) 654 3400
(866) 854 3048 ext 6543400

Customer's Own Material Warranty

Herman Miller does not warrant COM textiles. COM textiles are tested for application only; they are not tested for performance. The Herman Miller warranty does apply to the underlying products.

Suppliers of COM textiles are responsible for color consistency within commercial tolerances, UV stability, and resistance to soiling and perspiration.

Customer's Own Material Pricing

COM is a Category 1 fabric. There are no application charges for COM fabrics.

Ordering and payment for COM textile yardage are the responsibility of the customer and the textile supplier.

If desired, Herman Miller will purchase COM textiles directly from Maharam, Camira, C.F. Stinson, Guilford of Maine, Luna Textiles, Momentum Textiles and Ultrafabrics to simplify ordering and shipment. For this service, refer to the Supplier Connection program in Omni.

Application Note

Herman Miller does not guarantee that Customer's Own Material (COM) fabric patterns will align across panels/tiles or from one screen to the next. We also do not guarantee that COM fabric designs will be positioned consistently in the same location across several panels, tiles, or screens.

Textile Approval

1. Select a COM textile and a Herman Miller product.
2. If your textile does not show as tested in Omni, submit a request. You will be required to select a specific color of the textile and feature of the product to test, i.e., seat, back, etc.
3. Herman Miller will notify you of approval or disapproval within 4 days from receipt of the test yardage.

Ordering Products with COM

1. Refer to the specific products to determine the yardage required for COM textiles.
   Note: Yardage requirements are based on nondirectional, 54"-wide textiles. 66"-wide textiles are needed for application on 60"-wide products. Additional yardage may be needed due to the unique characteristics of a textile.
2. Obtain the COM ID# in Omni. If the color you are ordering does not have a COM ID# assigned, click "Create ID".
3. Enter your order on Order Manager in Omni.
4. Upon receipt of your purchase order, Herman Miller will send you a PO acknowledgment.
5. Arrangements must be made for the textiles to be shipped from the supplier to Herman Miller for application to the Herman Miller products. Textiles must be tagged with the assigned identification number and the roll yardage quantity. See Omni for shipping procedures and current shipping addresses or contact a COM representative at (616) 654 3400 or (866) 854 3048 ext 6543400.

   Products will be scheduled for production when COM textiles are received at Herman Miller. Standard lead times in effect at that time will apply.

   Note: If textiles are to be purchased directly by Herman Miller through the Supplier Connection program, Herman Miller will handle the ordering and shipping process and will schedule your order for production upon receipt of your purchase order (dependent on textile availability). Refer to the Supplier Connection program for more information.

Supplier Connection

Program Overview

The Supplier Connection program is a service offered by Herman Miller to purchase approved COM textiles directly from Maharam, Camira, C.F. Stinson, Guilford of Maine, Luna Textiles, Momentum Textiles and Ultrafabrics. When you select a textile through this program, Herman Miller will facilitate the ordering, scheduling, and shipment of the textile directly with the supplier.

Suppliers included in the Supplier Connection program keep an active inventory of textiles that are pre-approved for application to Herman Miller products. Pre-approval applies only to the suitability of a textile for manufacturing and application to a Herman Miller product. Omni provides an overview of fabrics that have been tested and indicates whether or not they were approved for application to Herman Miller products.

Specific information on the terms and conditions, testing, approval, and ordering process for the Supplier Connection program is listed below. Questions and requests for assistance may be directed to your COM representative at:
(616) 654 3400
(866) 854 3048 ext 6543400

Supplier Connection Warranty

Textiles purchased by Herman Miller through the Supplier Connection program are COM and are not warranted by Herman Miller. COM textiles are tested for application only; they are not tested for performance. The Herman Miller warranty does apply to the underlying products.

Suppliers of COM textiles are responsible for color consistency within commercial tolerances, UV stability, and resistance to soiling and perspiration.

Supplier Connection Pricing

Textiles purchased by Herman Miller through the Supplier Connection program are COM. COM is a Category 1 fabric. There are no application charges for COM fabrics.

Payment for textiles purchased by Herman Miller through the Supplier Connection program is the responsibility of the customer or dealer. Herman Miller will invoice the order at a total product cost based on the supplier's price published at the time of the order.

Textile Approval

1. Select a COM textile and a Herman Miller product.
2. If your textile does not show as tested in Omni, submit a request. You will be required to select a specific color of the textile and feature of the product to test, i.e., seat, back, etc.
3. Herman Miller will notify you of approval or disapproval within 4 days from receipt of the test yardage.

Ordering Products with Supplier Connection COM

1. Identify and include the following information on your purchase order:
   - Product number and option
   - Herman Miller's COM identification number
2. Enter your order on Order Manager in Omni.
3. Upon receipt of the purchase order, Herman Miller will process your order and send you a PO acknowledgment. Herman Miller will determine the yardage required to produce your product and will order and schedule for delivery the required textile. Standard lead times in effect at the time the textile is allocated at the supplier will apply to products ordered through this program.

Textiles Application Chart — Workspaces

• *Available*

A *Assigned lead-time textile.*

A *Maharam textiles are on assigned lead times.*

See page 2 for exception notes.

		Action Office® Panels/Connectors	Action Office B-Style Tackboards	Action Office/Ethospace E-Style Storage	Ethospace Tiles/Connectors	Ethospace/Canvas Office Landscape® Privacy Doors	Canvas Tiles/Extended Width Tiles/Channel Tiles	Canvas B-/E-Style Storage	Canvas Tackboards	Canvas Metal Desk Hutch Back Panel	Canvas Vista™ Movable Insert and Display Unit	OE1 Boundary Agile Wall Tile	OE1 Boundary Project Board and Screens	OE1 Floating Screen	OE1 Nook Liner/Felt Screen Liner/Storage Trolley Liner	Overlay™ Performance Wall Cladding	Pari™ Screens/Flat Edge Screens/Channel Screens	Passport Work Table Screen	Renew™ Link Screens	Ambit™ Workspace Solutions Screen	Ambit Workspace Solutions Metal Screen Liner	Exclave® Tackable Boards and Stowage Tackable Backdrop	Exclave Video-Friendly Tackable Boards & Stowage Tackable Backdrop	Personal Side Screen	Tu® Wood Storage Cubby Tackboard	Seating
Price Category 1																										
COM	Customer's Own Material A	1	1	1	1	1	1	1	1	1	1	1	1			1	1		1	1		1		1	1	1
2V_ _	Chain	•	•	•	•	•	22	•	•	•	•		•			•	•		•						•	
8T_ _	Crossing (85_ _)	2	2	•	•	•	•	2	•	•		•	•			•	•		•	•		•	8		•	18
3DE_ _	Dex	6	2	•	•	•	•	2	•	•		•	•			•	•		•	•		•		•	•	•
2I_ _	Grasscloth	•	•	•	•	•	•	•	•	•	•		•			•	•		•	•				•	•	
1MN_ _	Monologue	2	2	•	•	•	•	2	•	•	•		•			•	•		•	•				•	•	•
5T_ _	Resonance	•	•	•	•	•	•	•	•	•	•					•								•	•	
4SC_ _	Scatter	2	2				•		•	•	•	•	•			•	•		•	•		•		•	•	•
3DN_ _	Scribe	•	•	•	•	•	•	•	•	•	•	•	•			•	•		•	•		•		•	•	•
22F_ _	Slant	6	•		•	•	•		•	•	•					•									•	
235_ _	Tailored	•		•	•	•	8	•	•	•	•					•									•	•
1WS_ _	Whisper	2	2	•	•	•	•	2	•	•	•	•	•			•	•		•	•		•		•	•	•
Price Category 2																										
3AR_ _	Aristo	2	2	•	•	•	•	2	•	•	•	•	•			•	•		•	•		•		•	•	•
51_ _	Cord	•	•	•	•	•	•	•	•	•	•					•									•	
92_ _	Crepe	2	•	•	•	•	•	•	•	•	•	•				•	•			•		•	8	•		•
3EP_ _	Epic	2	2	•	•	•	•	2	•	•		•	•			•	•		•	•		•		•	•	•
3DP_ _	Hint	•	•	•	•	•	•		•	•	•	•				•	•		•	•		•		•	•	•
4N_ _	Horizon	2	2	•	•	•	•	•	•	•	•					•	•			•				•	•	
1HA_ _	Medley	2	2	•	•	•	•	•	•	•	•	•	•	•		•	•		•	•		•	8	•		•
4ME_ _	Mellow	2	2	•	•	•	•	2	•	•	•	•	•			•	•		•	•		•		•	•	•
ZMA_ _	Metaphor - Maharam A	2	2	2	2	•	•	2	•		•	•				•	•					•				•
8I1_ _	Muse - Maharam A	2	2	2	•		•	2	•		•	•	•			•	•		•	•		•		•		•
3SL_ _	Sequel			2				2																		•
4TE_ _	Terra	2	2	•	•	•	•	2	•	•	•	•	•			•	•		•	•		•		•	•	•
3TW_ _	Twine	•	•	•	21	•	•	•	•	•	•	•	•			•	•		•	•		•		•	•	
8R_ _	Twist (5S_ _)	5	2	•	•	•	•	2	•	•	•		•			•	•		•	•				•	•	18
Price Category 3																										
43Z_ _	Fractal	•	•	•	•	•	•	•	•	•	•	•	•			•	•		•	•		•		•	•	•
47_ _	Ground Cloth®	•	•	•	•	•	•	•	•	•	•	•	•			•	•		•	•		•	8	•	•	
ZM2_ _	Meld - Maharam A *	2	2	•	•	•	•	•	•	•	•	•	•			•	•		•	•		•		•		•
4GE_ _	Parcel	•	•	•	•	•	•	•	•	•	•	•	•			•	•		•	•		•		•	•	•
8W_ _	Strands	•	•	•	•	•	•	•	•	•			•			•	•		•	•				•	•	
Price Category 4																										
3DM_ _	Daydream	2	2	•			•	2	•	•	•	•	•			•	•		•	•		•		•	•	•
1HS_ _	Hush	•	•	•	•	•	•	•	•	•	•	•			•	•		•	•		•	•		•	•	
Price Category 5																										
3CY_ _	Cozy													•												
14A_ _	Hopsak	2	2	•	•		•	2	•	•	•	•				•						•			•	•
40G_ _	Method - Maharam A	2	2	2	2	•	•	2	•	•	•	•	•			•	•		•	•		•		•		•
ZNC_ _	Nico - Maharam A	2	2	2	•	•	•	2	•	•	•	•	•			•	•		•	•		•		•		•
Price Category 6-7																										
No fabrics available at this time.																										

continued on next page

Textiles Application Chart — Workspaces *continued*

• *Available*

A *Assigned lead-time textile.*

A *Maharam textiles are on assigned lead times.*

See page 2 for exception notes.

	Action Office® Panels/Connectors	Action Office B-Style Tackboards	Action Office/Ethospace E-Style Storage	Ethospace Tiles/Connectors	Ethospace/Canvas Office Landscape® Privacy Doors	Canvas Tiles/Extended Width Tiles/Channel Tiles	Canvas B-/E-Style Storage	Canvas Tackboards	Canvas Metal Desk Hutch Back Panel	Canvas Vista™ Movable Insert and Display Unit	OE1 Boundary Agile Wall Tile	OE1 Boundary Project Board and Screens	OE1 Floating Screen	OE1 Nook Liner/Felt Screen Liner/Storage Trolley Liner	Overlay™ Performance Wall Cladding	Pari™ Screens/Flat Edge Screens/Channel Screens	Passport Work Table Screen	Renew™ Link Screens	Ambit™ Workspace Solutions Screen	Ambit Workspace Solutions Metal Screen Liner	Exclave® Tackable Boards and Stowage Tackable Backdrop	Exclave Video-Friendly Tackable Boards & Stowage Tackable Backdrop	Personal Side Screen	Tu® Wood Storge Cubby Tackboard	Seating
Price Category 8																									
1QG_ _Breeze - Maharam A													•												
Price Category 9																									
No fabrics available at this time.																									
Price Category A																									
No fabrics available at this time.																									
Price Category B																									
VM_ _ Medium - Maharam A		2				•	20	•	•	•					•										•
TI_ _ Messenger - Maharam A *		2	•	12	•	•	2	•	•	•					•	•			•						•
Price Category C																									
Z27_ _Manner - Maharam A	2	2	2	•		•	2	•	•	•					•	•			•						•
Z3_ _ Metric - Maharam A	2	2			•	•		•	•	•					•	•			•						•
Price Category D																									
ZMD_ _Mode - Maharam A	2																				•				•
ZS3_ _Spiral - Maharam A	•	•	•	•		•	•	•	•	•					•										
Price Category E																									
ZF3_ _ Flock - Maharam A												•			•				•						
TT_ _ Parallel - Maharam A	7	•		•	•	•	16	•	•	•					•										
Price Category F																									
8EX_ _ Emit - Maharam A	2	2	2	•	•	•	2	•	•																
Price Category G-Z																									
No fabrics available at this time.																									

Application Note: Herman Miller cannot guarantee material/pattern alignment in adjacent products. For example, a fabric's pattern may not align from one screen to the next, or from one panel to the next.

** Available in select colors on 20-day lead-time. Refer to "Maharam Colors - Workspaces" for 20-day colors.*

1 *Refer to price book appendices and Omni for COM information.*
2 *Available on all products except 54" and 60" wide.*
3 *Not available on AO partial-glazed panels.*
4 *Not available on Action Office (AO®) acoustical panels.*
5 *(8R_ _), (8T_ _), (85_ _), and (5S_ _) not available on AO acoustical panels and not available on 54"- or 60"-wide products.*
6 *Not available on Action Office (AO®) connectors, cable management, and spacers.*
7 *Not available on AO acoustical panels; not available on AO2 cable management panel face.*
8 *Available in select colors. See the "Proprietary Textile Colors — Workspaces" appendix.*
12 *Not available on Ethospace tackable tiles.*
16 *Not available on Canvas E-style storage.*
18 *Available on seating products in select colors. See the "Proprietary Textile Colors — Seating" appendix.*
20 *Not available on Canvas E-style storage or 60"-wide B-style storage.*
21 *Not available on Ethospace connectors and cable management tiles.*
22 *Not available as railroaded application option for* Chain *(2V00) on Canvas Extended Width Tiles.*

Price Category 1

Customer's Own Material

See Order Information in Appendices. Assigned lead-time textile. A

8Z Pellicle®

Seating
For New Aeron® Chairs
56% elastomeric
44% polyester

23101	Mineral
23102	Carbon
23103	Graphite

AireWeave™ 2

Seating
For Mirra® 2 Chairs
67% elastomeric
33% antimony-free polyester

1A701	Alpine
1A702	Slate Grey
1A703	Graphite
1A704	Lime Green
1A705	Cappuccino
1A706	Urban Orange
1A707	Dark Turquoise
1A708	Twilight

Chain

Workspaces
66" wide
100% recycled polyester
with 12% ocean bound plastic

2V01	Pearl
2V02	Oyster
2V03	Wheat
2V04	Linen
2V05	Wicker
2V06	Bamboo
2V07	Sage
2V08	Spring Wood
2V09	Iceberg

Crossing

Seating/Workspaces
54" wide
86% antimony-free polyester
14% polyester

8T03	Wicker *
8T04	Porcelain *
8T05	Warm Grey *
8T10	Tomato
8T17	Cerulean
8T18	Indigo
8T19	Shale *
8T22	Tin *
8T23	Graphite
8T24	Black

Crossing

Workspaces
For workspaces products only.
54" wide
86% antimony-free polyester
14% polyester

8501	Ivory *
8502	Oyster *

* Colors available on Exclave® Video-friendly Tackable Boards and Stowage Tackable Backdrop

Dex

Ancillary/Seating/Workspaces
54" wide
67% recycled polyester
33% polyester

3DE01	Frost
3DE02	Silver Pine
3DE03	Stone
3DE04	Shale
3DE05	Charcoal
3DE06	Gossamer
3DE07	Pine

Duo

Seating
For Lino™ Chairs
52% polyester
48% elastomeric

4RM01	Mineral
4RM02	Poppy
4RM03	Green Leaf
4RM04	Jade
4RM05	Shadow
4RM06	Graphite

Flexnet™

Seating
For Caper® Chairs
69% elastomeric
31% polyester

6V01	Black
6V02	Silver Grey

Grasscloth

Workspaces
66" wide
100% recycled polyester
with 11% ocean bound plastic

2I01	Silver Birch
2I02	Pampas
2I03	Sedge
2I07	Lea
2I08	Taro
2I09	Steam Grey
2I13	Gravel

Intercept

Seating
For Cosm™ Chairs
60% elastomeric
40% polyester

84501	Graphite
84502	Carbon
84503	Mineral
84504	Nightfall
84505	Glacier
84506	Canyon

Interweave 2

Seating
For Verus™ Chairs
65% elastomeric
35% polyester

36501	Iceberg
36502	Poppy
36503	Beachglass
36504	Blue Grotto
36505	Slate
36506	Shale

Lyris 2™

Seating
For Setu® Chairs
74% elastomeric
26% polyester

4W21	Alpine
4W23	Chartreuse
4W25	Berry Blue
4W26	Slate Grey
4W28	Chino
4W31	Graphite

Monologue

Ancillary/Seating/Workspaces
54" wide
56% recycled polyester
44% polyester

1MN01	Linen
1MN02	Alabaster
1MN04	Folkstone
1MN05	Silver Pine
1MN06	Slate
1MN07	Seed
1MN09	Persimmon
1MN11	Meadow
1MN12	Blue Sky
1MN13	Blue Spruce
1MN14	Deep Sea

Price category 1 continued on next page

- Maharam textiles are on assigned lead times A.
- Fabric numbers are listed as Herman Miller fabric number/Maharam fabric number.

Price Category 1
continued

Resonance
Workspaces
66” wide
100% polyester

5T04	Greige
5T05	Porcelain
5T06	Alabaster
5T15	Iris
5T28	Sugar
5T47	Tobacco
5T54	Saltbush
5T57	Seed
5T58	Sepia
5T60	Iceberg
5T65	Red
5T67	Boysenberry
5T68	Pistachio
5T69	Green Apple
5T71	Jade
5T72	Blue Green
5T74	Twilight

Ripple 3D Knit
Seating
Available only on Zeph® Chairs.
knit to size
99% recycled polyester
1% lycra

5H201	Black
5H202	Carbon
5H203	Alpine
5H204	Silt
5H205	Tea Rose
5H206	Cocoa
5H207	Persimmon
5H208	Blaze
5H209	Cayenne
5H210	Falcon
5H211	Mustard Seed
5H212	Patina
5H213	Olive
5H214	Moss
5H215	Aloe
5H216	Glacier
5H217	Ultramarine
5H218	Nightfall
5H219	Bluebell
5H220	Boysenberry
5H221	Nightfall/Bluebell
5H222	Patina/Alpine
5H223	Cayenne/Glacier
5H224	Tea Rose/Olive
5H225	Silt/Blaze

Scatter
Ancillary/Seating/Workspaces
54” wide
100% recycled polyester,
with 26% ocean bound plastic

4SC01	Alpine
4SC02	Fog
4SC03	Shale
4SC04	Persimmon
4SC07	Olive
4SC08	Glacier
4SC09	Blue Sky
4SC10	Lagoon
4SC11	Slate Grey
4SC12	Blue Black

Scribe
Seating/Workspaces
54” wide
100% recycled polyester
with 53% ocean bound plastic

3DN01	Spring Wood
3DN02	Poplar
3DN03	Pewter
3DN04	Deep Sea
3DN05	Fir
3DN06	Nutmeg

Slant
Workspaces
66” wide
51% polyester
49% recycled polyester

22F04	Pesto
22F06	Neptune
22F07	Blueberry
22F10	Pumpkin
22F12	Silver Birch
22F13	Bluestone
22F15	Shale

Splash 3D Knit
Seating
Available only on Zeph® Chairs.
knit to size
98% recycled polyester
2% lycra

5H101	Black
5H102	Carbon
5H103	Alpine
5H104	Silt
5H105	Tea Rose
5H106	Cocoa
5H107	Persimmon
5H108	Blaze
5H109	Cayenne
5H110	Falcon
5H111	Mustard Seed
5H112	Patina
5H113	Olive
5H114	Moss
5H115	Aloe
5H116	Glacier
5H117	Ultramarine
5H118	Nightfall
5H119	Bluebell
5H120	Boysenberry

Stretch Knit
Seating
Assigned lead-time textile. A
Available only on Sayl®
Suspension Back Work Chairs
97% polyester, 3% spandex

3DK01	Fog
3DK02	Slate Grey
3DK03	Java
3DK04	Black
3DK05	Red
3DK06	Green Apple
3DK07	Berry Blue

Price category 1 continued on next page

- Maharam textiles are on assigned lead times A.
- Fabric numbers are listed as Herman Miller fabric number/Maharam fabric number.

Price Category 1
continued

Tailored	
Ancillary/Seating/Workspaces	
54” wide	
56% polyester	
44% recycled polyester	
23501	Studio White * **
23502	Sugar *
23503	Tomato
23506	Chive
23508	Cobalt
23509	Cadet
23510	Fog
23511	Graphite
23512	Black
23513	Coffee

* Colors not available on Plex™ Lounge Furniture.
** Color not available on Canvas Tiles.

Tuck 3D Knit	
Seating	
Available only on Fuld Nesting Chairs.	
knit to size	
56% polyester	
44% recycled polyester	
9NK01	Alpine
9NK02	Carbon
9NK03	Nightfall
9NK04	Olive
9NK05	Cocoa
9NK06	Canyon

Whisper	
Ancillary/Seating/Workspaces	
54” wide	
73% recycled polyester	
27% polyester	
with 11.3% ocean bound plastic	
1WS01	Sand Dollar
1WS02	Pebble
1WS03	Silver Birch
1WS04	Iceberg
1WS05	Silver Pine
1WS06	Carbon
1WS07	Cumin
1WS12	Willow
1WS13	Sea Grass
1WS14	Pool
1WS15	Blueberry
1WS16	Glacier
1WS17	Grey
1WS18	Canyon

Price Category 2

Aristo	
Ancillary/Seating/Workspaces	
54” wide	
88% recycled polyester	
12% polyester	
Acrylic backing	
3AR01	Forest Moss
3AR02	Light Brindle
3AR03	Mink
3AR04	Copper
3AR05	Adobe
3AR06	Cherry
3AR07	Lilac
3AR08	Green Apple
3AR09	Surf
3AR10	Waterfall
3AR11	Cadet
3AR12	Tin
3AR13	Pewter
3AR14	Grey Brindle
3AR15	Grey Black

Cord	
Workspaces	
66” wide	
51% antimony-free polyester	
49% polyester	
5101	Ivory
5102	White Ash
5103	Linen
5104	Bamboo
5105	Sepia
5107	Sesame
5109	Bayou
5111	Spring Wood
5112	Summer White

Crepe	
Ancillary/Seating/Workspaces	
54” wide	
100% recycled polyester,	
with 43.6% ocean bound plastic	
9201	Licorice
9203	Smoke
9207	Cherry
9223	Cadet
9241	Beachglass
9249	Stone *
9251	Fog *
9252	Slate Grey
9261	Shale
9262	Graphite
9265	Mineral
9266	Persimmon
9267	Juniper
9268	Glacier
9269	Cascade
9270	Navy

* Colors available on Exclave® Video-friendly Tackable Boards and Stowage Tackable Backdrop.

Price category 2 continued on next page

- Maharam textiles are on assigned lead times A.
- Fabric numbers are listed as Herman Miller fabric number/Maharam fabric number.

Price Category 2
continued

Epic
Ancillary/Seating/Workspaces
54” wide
56% recycled polyester
44% polyester
Acrylic backing

3EP01	Alabaster
3EP02	Smoke
3EP03	Falcon
3EP05	Copper
3EP06	Urban Orange
3EP07	Poppy
3EP10	Clover
3EP11	Loden
3EP14	Peacock
3EP15	Cadet
3EP16	Indigo
3EP17	Spring Wood
3EP18	Grey Brindle
3EP19	Seed
3EP20	Carbon Dark

Hint
Ancillary/Seating/Workspaces
54” wide
76% recycled polyester
24% polyester

3DP01	Sediment
3DP02	Gunmetal
3DP03	Silt
3DP04	Porcelain
3DP05	Indigo
3DP06	Fern
3DP07	Adobe
3DP08	Red Sea

Horizon
Workspaces
54” wide
65% antimony-free polyester
35% polyester

4N01	Rye Grass
4N02	Sugar Pine
4N03	Silver Pine
4N04	White Ash
4N05	Spring Wood
4N08	Haystack
4N09	Oat Grass
4N13	Pine Cone
4N15	Elderberry

Marvel
Ancillary/Seating
54” wide
100% pvc-free polyurethane
antimicrobial, antibacterial finish

1MV01	Summer White
1MV02	Sand Dollar
1MV03	Espresso
1MV04	Folkstone Grey
1MV05	Graphite
1MV06	Onyx
1MV07	Polar Blue
1MV08	Blush Grey
1MV12	Red
1MV14	Pine
1MV15	Teal Green
1MV16	Twilight

Medley
Ancillary/Seating/Workspaces
54” wide
100% polyester

1HA01	Stone *
1HA02	Trail
1HA03	Charcoal
1HA04	Cinder
1HA07	Chutney
1HA09	Feather Grey *
1HA11	Loden
1HA13	Bayou *
1HA14	Blue Grotto
1HA15	Blueberry
1HA22	Khaki
1HA23	Pewter
1HA24	Yellow Oxide
1HA25	Vintage Rose
1HA26	Raspberry
1HA27	Acai Berry

* Colors available on Exclave® Video-friendly Tackable Boards and Stowage Tackable Backdrop

Mellow
Ancillary/Seating/Workspaces
54” wide
100% recycled polyester,
with 16% ocean bound plastic

4ME01	Mineral
4ME04	Olive
4ME05	Glacier
4ME06	Oceanside
4ME07	Charcoal

Metaphor – Maharam
Ancillary/Seating/Workspaces
54” wide
100% polyester
Acrylic backing

ZMA01/466553-001	Afterfeather *
ZMA02/466553-002	Moonflower
ZMA03/466553-003	Handcraft
ZMA04/466553-004	Crossroad
ZMA05/466553-005	Chondrite
ZMA06/466553-006	Detective
ZMA07/466553-007	Steamship
ZMA08/466553-008	Electricity
ZMA09/466553-009	Takeoff
ZMA10/466553-010	Parachute
ZMA11/466553-011	Blueshift
ZMA12/466553-012	Dockyard
ZMA13/466553-013	Bathe
ZMA14/466553-014	Icebound
ZMA15/466553-015	Thermosphere
ZMA16/466553-016	Aboard
ZMA17/466553-017	Agateware
ZMA18/466553-018	Homeland
ZMA19/466553-019	Rockfall
ZMA20/466553-020	Undergrowth
ZMA21/466553-021	Gremolata
ZMA22/466553-022	Patina
ZMA23/466553-023	Sylvan
ZMA24/466553-024	Outfield
ZMA25/466553-025	Windbreak
ZMA26/466553-026	Saguaro

Price category 2 continued on next page

- Maharam textiles are on assigned lead times A.
- Fabric numbers are listed as Herman Miller fabric number/Maharam fabric number.

Price Category 2
continued

Metaphor *continued*	
ZMA27/466553-027	Barnwood
ZMA28/466553-028	Cookshop
ZMA29/466553-029	Amandine
ZMA30/466553-030	Bodhran
ZMA31/466553-031	Centerstage
ZMA32/466553-032	Focaccia
ZMA33/466553-033	Bumblebee
ZMA34/466553-034	Microbrew
ZMA35/466553-035	Sauna
ZMA36/466553-036	Gazebo
ZMA37/466553-037	Pirouette
ZMA38/466553-038	Heartbeat
ZMA39/466553-039	Shino
ZMA40/466553-040	Sunrise
ZMA41/466553-041	Florist
ZMA42/466553-042	Beadwork
ZMA43/466553-043	Framboise
ZMA44/466553-044	Wisteria
ZMA45/466553-045	Warrior

* Colors not available on Eames Aluminum Group, Soft Pad, Sofa Compact, Molded Fiberglass/Plastic Chairs, Task Chair, Wire Chairs, Nelson Platform Bench Cushion, Swoop Plywood Lounge Chair.

Muse – Maharam	
Ancillary/Seating/Workspaces	
54” wide	
100% post-consumer recycled polyester	
8I101/466487-001	Crescendo
8I102/466487-002	Resonate
8I103/466487-003	Runway
8I104/466487-004	Ascend
8I105/466487-005	Veil *
8I106/466487-006	Refresh *
8I107/466487-007	Clear *
8I108/466487-008	Fantasy
8I109/466487-009	Miso
8I110/466487-010	Compass
8I111/466487-011	Bergamot *
8I112/466487-012	Grasshopper

Muse *continued*	
8I113/466487-013	Goal
8I114/466487-014	Mistletoe
8I115/466487-015	Seaglass *
8I116/466487-016	Frigid
8I117/466487-017	Riverbend
8I118/466487-018	Noble
8I119/466487-019	Pulsar
8I120/466487-020	Velella
8I121/466487-021	Sailboat
8I122/466487-022	Sparse
8I123/466487-023	Vase
8I124/466487-024	Haven
8I125/466487-025	Mead
8I126/466487-026	Neat
8I127/466487-027	Jovial
8I128/466487-028	Theater
8I129/466487-029	Poinsettia
8I130/466487-030	Celebrate
8I131/466487-031	Spectacle

* Colors not available on Valor Seating.

Rhythm	
Ancillary/Seating	
54” wide	
100% polyester	
3002	Green Apple
3004	Bayou
3005	Berry Blue
3006	Iris
3007	Twilight
3009	Poppy
3010	Molasses
3012	Khaki
3013	Mink
3014	Black *
3015	Charcoal *

* Colors available on Embody® Chair.

Sequel	
Ancillary/Seating/Workspaces	
54” wide	
100% vinyl	
100% polyester knit backing	
Resilience® finish	
3SL01	White
3SL02	Pebble
3SL03	Mushroom
3SL04	Stone
3SL06	Rattan
3SL09	Seal
3SL10	Blue Fog
3SL11	Folkstone
3SL12	Shale
3SL13	Slate Grey
3SL14	Charcoal
3SL15	Carbon Dark
3SL28	Navy *

* Color available on Eames® Tandem Sling Seating.

Terra	
Ancillary/Seating/Workspaces	
54” wide	
100% post-consumer recycled biodegradable polyester *	
4TE01	Spring Wood
4TE02	Zinc
4TE03	Pine Cone
4TE04	Charcoal

* 1% biodegradation in 1,278 days under ASTM D5511 conditions. No evidence of further degradation.

Twine	
Workspaces	
66” wide	
100% recycled polyester	
3TW01	Silver Birch
3TW02	Ivory
3TW03	Alabaster
3TW04	Bamboo
3TW05	Iceberg
3TW06	Charcoal
3TW07	Feather Grey
3TW08	Shale

Twist	
Ancillary/Seating/Workspaces	
54” wide	
80% antimony-free polyester	
13% recycled polyester	
7% polyester	
8R05	Wicker
8R10	Poppy
8R14	Tin
8R15	Shale
8R16	Graphite
8R17	Birch
8R18	Sepia
8R22	Blueberry
8R23	Green Apple
8R26	Gunmetal
8R27	Cinder
8R29	Pekoe
8R33	Forest
8R35	Waterfall
8R36	Midnight Blue
8R37	Carbon Dark

Twist	
Workspaces	
For workspaces products only.	
54” wide	
80% antimony-free polyester	
13% recycled polyester	
7% polyester	
5S03	Oyster

- Maharam textiles are on assigned lead times A.
- Fabric numbers are listed as Herman Miller fabric number/Maharam fabric number.

Price Category 3

Ace

Ancillary/Seating
54” wide
100% polyurethane
Polyester knit backing
Stain resistant finish

3AC01	Summer White
3AC02	White Ash
3AC03	Rye
3AC04	Metal
3AC05	Clay
3AC06	Chestnut
3AC08	Camelback
3AC09	Chipotle
3AC12	Artichoke
3AC13	Sepia Dark
3AC14	Aloe
3AC15	Flint
3AC16	Blue Sky
3AC17	Oceanside
3AC18	Midnight
3AC20	Frost
3AC21	Lead
3AC22	Black

Fractal

Ancillary/Seating/Workspaces
58” wide
84% recycled polyester
16% polyester

43Z01	Granite
43Z02	Golden Olive
43Z03	Verdant
43Z04	Cadet

Ground Cloth®

Workspaces
66” wide
100% polyester

4701	Vapor Grey
4721	Warm White *
4722	Fog *
4723	Straw *
4724	Red Orange *
4726	Green Apple *
4727	Caribbean *
4728	Midnight *
4729	Cappuccino *

* Colors available on Exclave® Video-friendly Tackable Boards and Stowage Tackable Backdrop

Latitude

Seating
Colors for Mirra 2 Chairs
100% polyester

8M10	Alpine
8M17	Black
8M23	French Press
8M27	Cordovan
8M28	Ochre
8M28	Ultramarine
8M28	Olive

Meld – Maharam

Ancillary/Seating/Workspaces
54” wide
68% post-consumer recycled polyester
32% polyester
PFOA-Free stain resistant

ZM201/466387-201	Vast
ZM202/466387-202	Panda **
ZM203/466387-203	Skyline *
ZM204/466387-204	Knight **
ZM205/466387-205	Quill **
ZM206/466387-206	Pipe
ZM207/466387-207	Grate *
ZM208/466387-208	Gloss

Meld *continued*

ZM209/466387-209	Bulb
ZM210/466387-210	Bride
ZM211/466387-211	Stark
ZM212/466387-212	Seashell
ZM213/466387-213	Antler
ZM214/466387-214	Crater *
ZM215/466387-215	Perennial
ZM216/466387-216	Mulberry
ZM217/466387-217	Fuchsia *
ZM218/466387-218	Amethyst *
ZM219/466387-219	Merlot
ZM220/466387-220	Magma *
ZM221/466387-221	Rooster
ZM222/466387-222	Heat *
ZM223/466387-223	Clementine
ZM224/466387-224	Fox
ZM225/466387-225	Kiss *
ZM226/466387-226	Bare
ZM227/466387-227	Blonde
ZM228/466387-228	Mimosa
ZM229/466387-229	Comet *
ZM230/466387-230	Honeydew
ZM231/466387-231	Wild *
ZM232/466387-232	Vine
ZM233/466387-233	Seed
ZM234/466387-234	Kale *
ZM235/466387-235	Waterfall *
ZM236/466387-236	Nordic *
ZM237/466387-237	Reef *
ZM238/466387-238	Wave
ZM239/466387-239	Isle **
ZM240/466387-240	Creek
ZM241/466387-241	Mariner *
ZM242/466387-242	Globe
ZM243/466387-243	Spa

* Colors available on 20-day lead time.
** Colors available on 10-day lead time.

Parcel

Ancillary/Seating/Workspaces
54” wide
100% recycled polyester

4GE01	Gunmetal
4GE02	Brindle
4GE03	Bayou
4GE04	Pesto
4GE05	Golden Olive
4GE06	Copper Sea

Saille - Geiger Textile

Ancillary
57” wide
69% cotton
31% polyester
PFOA-Free stain resistant finish
Acrylic backing

18001	Coal
18002	Shale
18003	Haze
18004	Stone
18005	White *
18006	Beach
18007	Sand
18008	Blush
18009	Brick
18010	Fog
18011	Celadon
18012	Poolside
18013	Summer Sky
18014	Lake
18015	Midnight Blue

* Color not available on Eames® Soft Pad Group Chairs/Ottomans.

Price category 3 continued on next page

- Maharam textiles are on assigned lead times A.
- Fabric numbers are listed as Herman Miller fabric number/Maharam fabric number.

Price Category 3
continued

Price Category 4

Strands

Workspaces
66” wide
100% recycled polyester

8W01	Pebble
8W02	Porcelain
8W03	Taupe
8W04	Honey
8W05	Khaki
8W06	Rye
8W07	Wicker
8W08	Tin
8W09	Cool Grey

Cygnus

Ancillary
For Eames® Aluminum Group Chairs
69% elastomeric
31% polyester

5401	Black
5402	Zinc
5403	Quartz

Daydream

Ancillary/Seating/Workspaces
54” wide
48% wool
41% recycled polyester
9% nylon
2% polyester

3DM01	Rye Grass
3DM02	Silver Birch
3DM03	Pewter
3DM04	Graphite
3DM05	Black
3DM06	Lemongrass
3DM07	Permission
3DM08	Juniper
3DM09	Sea Grass
3DM10	Nightfall

Hush

Workspaces
66” wide
80% polyester
20% viscose

1HS01	Canyon
1HS02	Pesto
1HS03	Bayou
1HS04	Greystone
1HS05	Charcoal
1HS06	Rye Grass
1HS07	Cool Grey
1HS08	Dark Grey
1HS09	Aqua Green
1HS10	Nightfall

Kalista - Geiger Textile

Ancillary
54” wide
71% post-industrial recycled cotton
18% post-industrial recycled polyester
11% polyester
PFOA-Free stain resistant finish

1AL01	Cotton
1AL02	Natural
1AL03	Titanium
1AL04	Pewter
1AL05	Starry Night
1AL06	Red Hot
1AL07	Sun Kissed
1AL08	Dune
1AL09	Beach Glass
1AL10	Bluestone
1AL11	Seaside
1AL12	Night Sky

Lariat – Maharam

Ancillary/Seating
54” wide
100% vinyl

ZLR01/440401-001	001
ZLR02/440401-002	002
ZLR04/440401-004	004
ZLR06/440401-006	006
ZLR07/440401-007	007
ZLR08/440401-008	008
ZLR10/440401-010	010
ZLR11/440401-011	011
ZLR13/440401-013	013
ZLR14/440401-014	014
ZLR15/440401-015	015
ZLR16/440401-016	016
ZLR18/440401-018	018
ZLR20/440401-020	020
ZLR21/440401-021	021
ZLR24/440401-024	024
ZLR25/440401-025	025
ZLR26/440401-026	026

Lariat *continued*

ZLR28/440401-028	028
ZLR31/440401-031	031
ZLR32/440401-032	032
ZLR33/440401-033	033
ZLR34/440401-034	034
ZLR38/440401-038	038
ZLR39/440401-039	Granite
ZLR40/440401-040	Linen
ZLR41/440401-041	Stella
ZLR42/440401-042	Saddle
ZLR43/440401-043	Holly
ZLR44/440401-044	Maroon
ZLR45/440401-045	Siren
ZLR46/440401-046	Reseda
ZLR47/440401-047	Purslane
ZLR48/440401-048	Spire
ZLR49/440401-049	Papyrus
ZLR50/440401-050	Chickadee
ZLR51/440401-051	Requiem

Sync

Ancillary/Seating
55” wide
100% polyester

3SY01	Pine Cone
3SY03	Canyon
3SY04	Truffle
3SY06	Everglade
3SY08	Nightfall
3SY09	Dark Mineral
3SY10	Slate Grey
3SY11	Dark Carbon
3SY12	Black

- Maharam textiles are on assigned lead times A.
- Fabric numbers are listed as Herman Miller fabric number/Maharam fabric number.

Price Category 5

Arlo - Maharam

Ancillary/Seating
70% wool
30% polyester

5YT01	Turn
5YT02	Embers
5YT03	Parallel
5YT04	Octave
5YT05	Musing
5YT06	Summon
5YT07	Dynamic
5YT08	Signals
5YT09	Aspect
5YT10	Dedicate
5YT11	Juniper
5YT12	Cilantro
5YT13	Hawthorn
5YT14	Thread
5YT15	Spalted
5YT16	Warmer
5YT17	Misted
5YT18	Share
5YT19	Chord
5YT20	Heroic
5YT21	Arpeggio
5YT22	Roots
5YT23	Sumac
5YT24	Purl
5YT25	Homeward

Cozy

Ancillary/Seating
54” wide
100% wool

3CY01	Heathered Warm Grey
3CY02	Heathered Rye Grass
3CY03	Heathered Cool Grey
3CY05	Heathered Black
3CY06	Heathered Persimmon
3CY07	Heathered Loden
3CY09	Heathered Lagoon
3CY10	Heathered Twilight

Hopsak

Ancillary/Seating/Workspaces
56” wide
100% recycled polyester

14A20	Black
14A22	Raw Umber Dark
14A26	Grey Blue Dark
14A30	Sepia Dark
14A38	Emerald Dark
14A39	Yellow Dark
14A40	Orange
14A41	Sienna
14A42	Olive Green Dark
14A43	Crimson
14A44	Crimson Dark Dark
14A45	Violet Dark
14A46	Pink Dark Dark
14A47	Ultramarine Dark
14A48	Cobalt Blue
14A49	Terra Cotta
14A50	Ochre Dark

Ingenue - Geiger Textile

Ancillary
54” wide
28% wool
26% viscose
25% acrylic
16% polyester
5% cotton
PFOA-Free stain resistant finish

1GH01	Sand
1GH02	Fog
1GH03	Flannel
1GH04	Trench
1GH05	Vermillion
1GH06	Adriatic
1GH07	Umber
1GH08	Charcoal

Method - Maharam

Ancillary/Seating/Workspaces
54” wide
100% recycled polyester
with 9% ocean-bound plastic

40G01/466579-001	Inspire
40G02/466579-002	Rhea
40G03/466579-003	Noise
40G04/466579-004	Speedway
40G05/466579-005	Villanelle
40G06/466579-006	Maestro
40G07/466579-007	Destiny
40G08/466579-008	Possess
40G09/466579-009	Waterside
40G10/466579-010	Relax
40G11/466579-011	Delightful
40G12/466579-012	Parrotlet
40G13/466579-013	Verdurous
40G14/466579-014	Bosky
40G15/466579-015	Acreage
40G16/466579-016	Allude
40G17/466579-017	Tweed
40G18/466579-018	Korma
40G19/466579-019	Fossilize
40G20/466579-020	Cattail
40G21/466579-021	Shortcake
40G22/466579-022	Racecar
40G23/466579-023	Courtship
40G24/466579-024	Jam
40G25/466579-025	Sparrow

Nico - Maharam

Ancillary/Seating/Workspaces
54” wide
63% wool
21% polyester
16% solution-dyed nylon

ZNC01/466564-001	Alcazar
ZNC02/466564-002	Ironclad
ZNC03/466564-003	Tune
ZNC04/466564-004	Bridegroom
ZNC05/466564-005	Diode
ZNC06/466564-006	Jest
ZNC07/466564-007	Sanctuary
ZNC08/466564-008	Aquarius
ZNC09/466564-009	Houseboat
ZNC10/466564-010	Olympian
ZNC11/466564-011	Tennis
ZNC12/466564-012	Dressage
ZNC13/466564-013	Zing
ZNC14/466564-014	Bitterroot
ZNC15/466564-015	Gemini
ZNC16/466564-016	Posh
ZNC17/466564-017	Sizzle
ZNC18/466564-018	Cheerful
ZNC19/466564-019	Watermelon
ZNC20/466564-020	Toucan
ZNC21/466564-021	Rosin
ZNC22/466564-022	Jousting
ZNC23/466564-023	Jojoba
ZNC24/466564-024	Dromedary
ZNC25/466564-025	Toasty
ZNC26/466564-026	Casaba
ZNC27/466564-027	Greenhouse
ZNC28/466564-028	Sibyl
ZNC29/466564-029	Spearmint
ZNC30/466564-030	Pothos
ZNC31/466564-031	Calathea
ZNC32/466564-032	Landscape
ZNC33/466564-033	Espalier
ZNC34/466564-034	Gecko
ZNC35/466564-035	Meditation

Price category 5 continued on next page

- Maharam textiles are on assigned lead times A.
- Fabric numbers are listed as Herman Miller fabric number/Maharam fabric number.

Price Category 5
continued

Price Category 6

Price Category 7

Summit	
Ancillary/Seating	
54” wide	
100% silicone	
Polyester knit backing	
3SU02	Oyster
3SU03	Zinc
3SU04	Sparrow
3SU07	Black
3SU09	Beachglass
3SU10	Midnight

Vionette - Geiger Textile	
Ancillary	
55” wide	
100% polyester	
1GJ01	White Sand Mix
1GJ02	Desert Mix
1GJ03	Light Gray Mix
1GJ04	Pewter Mix
1GJ05	Cobalt Mix
1GJ06	Prussian Blue Mix
1GJ07	Chocolate Mix
1GJ08	Champagne
1GJ09	Morning Sky
1GJ10	Aquatic
1GJ11	Sapphire
1GJ12	Midnight Blue
1GJ13	Shadow
1GJ14	Java
1GJ15	Carbon
1GJ16	Black
1GJ17	Claret
1GJ18	Poppy

Balance	
Seating	
For Embody® chairs	
100% polyester	
3512	Carbon
3513	Black

Outdoor Weave	
Ancillary	
For Eames® Aluminum Group	
Outdoor Chairs	
50% elastomeric	
50% polypropylene	
7203	Lead
7205	Graphite

Customer’s Own Leather
See Order Information in Appendices. Assigned lead-time textile. A

Bamboo	
Ancillary	
83% bamboo	
17% polyurethane	
1BB01	Ivory
1BB02	Russet
1BB03	Black

Beck – Maharam	
Ancillary/Seating	
55” wide	
78% wool	
22% nylon	
ZB301/466571-001	Overshadow
ZB302/466571-002	Molecule
ZB303/466571-003	Zeitgeist
ZB304/466571-004	Blacksmith
ZB305/466571-005	Cornerstone
ZB306/466571-006	Chainmail
ZB307/466571-007	Buckram
ZB308/466571-008	Callisto
ZB309/466571-009	Interlude
ZB310/466571-010	Letterpress
ZB311/466571-011	Memoir
ZB312/466571-012	Litmus
ZB313/466571-013	Stoic
ZB314/466571-014	Inkpad
ZB315/466571-015	Praxis
ZB316/466571-016	Astute
ZB317/466571-017	Percolate
ZB318/466571-018	Halocline
ZB319/466571-019	Semblance
ZB320/466571-020	Loch
ZB321/466571-021	Lido
ZB322/466571-022	Underwater
ZB323/466571-023	Tetrapod
ZB324/466571-024	Nymph
ZB325/466571-025	Appalachian

Beck *continued*		
ZB326/466571-026	Menthol	
ZB327/466571-027	Woodruff	
ZB328/466571-028	Malachite	
ZB329/466571-029	Botanist	
ZB330/466571-030	Woodlet	
ZB331/466571-031	Katydid	
ZB332/466571-032	Exuberant	
ZB333/466571-033	Retrospect	
ZB334/466571-034	Lambic	
ZB335/466571-035	Argil	
ZB336/466571-036	Brushstroke	
ZB337/466571-037	Candescent	
ZB338/466571-038	Reedbuck	
ZB339/466571-039	Clayware	
ZB340/466571-040	Curio	
ZB341/466571-041	Whimsy	
ZB342/466571-042	Effervescent	
ZB343/466571-043	Lingonberry	
ZB344/466571-044	Resplendent	
ZB345/466571-045	Hollyhock	
ZB346/466571-046	Filigree	
ZB347/466571-047	Plutonic	
ZB348/466571-048	Foundry	
ZB349/466571-049	Patisserie	
ZB390	Gold	007/032/033 *
ZB391	Russet	036/040/039 *
ZB392	Indigo	008/013/014 *
ZB393	Forest	006/031/028 *

* Colors available only on Girard Color Wheel Ottoman.

Price category 7 continued on next page

- Maharam textiles are on assigned lead times A.
- Fabric numbers are listed as Herman Miller fabric number/Maharam fabric number.

Price Category 7
continued

Bellano - Geiger Textile

Ancillary
55” wide
75% wool
10% linen
8% nylon
7% alpaca

1AX01	Pearl
1AX02	Fog
1AX03	Fawn
1AX04	Pumice
1AX05	Pewter
1AX06	Atlantic
1AX07	Black Green
1AX08	Adriatic
1AX09	Coffee
1AX10	Charcoal
1AX11	Umber
1AX12	Magenta
1AX13	Bittersweet
1AX14	Sunflower

Capri - Geiger Textile

Ancillary
55” wide
36% cotton
32% acrylic
24% rayon
8% polyester
PFOA-Free stain resistant finish
Acrylic backing

17201	Snow
17202	Stone
17203	Trench
17204	Graphite
17205	Anthracite
17206	Light Silver
17207	Russet
17208	Chestnut Brown
17209	Sand
17210	Sterling
17211	Cobalt
17212	Ink

Mantle - Maharam

Ancillary/Seating
59% recycled polyester
37% polyester
4% spandex

8PV01	Pavement
8PV02	Future
8PV03	Piper
8PV04	Manifesto
8PV05	Mapo
8PV06	Redwood
8PV07	Rocky
8PV08	Impala
8PV09	Warbler
8PV10	Guild
8PV11	Kinetic
8PV12	Behold
8PV13	Orb
8PV14	Sport
8PV15	Utopia
8PV16	True
8PV17	Galore
8PV18	Parsley
8PV19	Dare
8PV20	Branzino
8PV21	Network
8PV22	Standard
8PV23	Salamander
8PV24	Oscillate

Milaner - Geiger Textile

Ancillary
55” wide
56% wool, 10% acrylic
10% alpaca, 10% cotton
8% nylon, 6% rayon

17101	Linen
17102	Flax
17103	Bark
17104	Deep Navy
17105	Charcoal
17106	Medium Grey
17107	Ash
17108	Crimson

Panno di Dolce - Geiger Textile

Ancillary
55” wide
65% wool
20% nylon
15% alpaca

1AV01	Fog
1AV02	Dune
1AV03	Trench
1AV04	Flannel
1AV05	Charcoal
1AV06	Umber
1AV07	Deep Navy
1AV08	Graphite
1AV09	Orange
1AV10	Pink
1AV11	Deep Red
1AV12	Bright Green
1AV13	Cerulean Blue
1AV14	Deep Cerulean Blue

Pristina - Geiger Textile

Ancillary
55” wide
37% wool
25% viscose
17% acrylic
15% cotton
6% polyester
PFOA-Free stain resistant

1JC01	Dove
1JC02	Goldstone
1JC03	Daybreak
1JC04	Pumice
1JC05	Cappuccino
1JC06	Gunmetal
1JC07	Caspian
1JC08	Café Noir

Resca - Geiger Textile

Ancillary
56” wide
75% wool
10% linen
8% nylon
7% alpaca

1AW01	Fog
1AW02	Dune
1AW03	Trench
1AW04	Flannel
1AW05	Umber
1AW06	Bordeaux

Rowan - Maharam

Ancillary/Seating
77% wool
12% nylon
6% acrylic
5% linen

5K301	Kingdom
5K302	Northern
5K303	Rabbit
5K304	Elephant
5K305	Furrow
5K306	Heirloom
5K307	Appear
5K308	Repose
5K309	Blackcurrant
5K310	Courage
5K311	Bordeaux
5K312	Cherish
5K313	Brickfield
5K314	Hibiscus
5K315	Carnelian
5K316	Cinnabar
5K317	Toasted
5K318	Revea
5K319	Cortado
5K320	Medallion
5K321	Polenta

Price category 7 continued on next page

- Maharam textiles are on assigned lead times A.
- Fabric numbers are listed as Herman Miller fabric number/Maharam fabric number.

Price Category 7
continued

Rowan *continued*	
5K322	Prized
5K323	Travertine
5K324	Companion
5K325	Library
5K326	Fable
5K327	Pixie
5K328	Arboretum
5K329	Ease
5K330	Sapling
5K331	Cottonwood
5K332	Scout
5K333	Valleyside
5K334	Ornament
5K335	Zucchini
5K336	Ethereal
5K337	Springtide
5K338	Traverse
5K339	Untold
5K340	Flowing
5K341	Laguna
5K342	Cerulean
5K343	Soundscape
5K344	Message
5K345	Freefall
5K346	Musical
5K347	Puzzle
5K348	Operatic
5K349	Daydream
5K350	Shale
5K351	Forward
5K352	Anthracite

Vesture - Geiger Textile	
Ancillary	
55” wide	
40% wool, 25% polyester	
20% silk, 15% nylon	
PFOA-Free stain resistant finish	
21701	Ashen
21702	Dark Blush
21703	Dusk
21704	Medium Gray
21705	Twilight

Wool Epinglé - Geiger Textile	
Ancillary	
54” wide	
100% wool	
16201	Swiss Red
16202	Orange
16203	Light Chestnut Brown
16204	Light Burnt Umber
16205	Pale Native Umber
16207	Grey
16208	Natier Blue
16209	Deep Cerulean Blue
16210	Anthracite
16211	Natural Native Umber
16212	Chestnut Brown

Wool Tweed - Geiger Textile	
Ancillary	
54” wide	
80% wool, 20% nylon	
16601	Trench
16602	Pewter
16603	Ruby
16604	Blue Gray
16605	Navy
16606	Umber
16607	Charcoal

Price Category 8

Breeze - Maharam	
Workspaces	
120” wide	
65% FR polyester	
35% post-consumer recycled	
FR polyester	
1QG06/283817-006	Meteorite
1QG09/283817-009	Serum

Luce - Maharam	
Ancillary/Seating	
59” wide	
75% post-consumer recycled wool	
20% polyester	
5% nylon	
ZLU01/466566-001	Brioche
ZLU02/466566-002	Blanched
ZLU03/466566-003	Relic
ZLU04/466566-004	Sinter
ZLU05/466566-005	Scoria
ZLU06/466566-006	Austere
ZLU07/466566-007	Pigment
ZLU08/466566-008	Alkali
ZLU09/466566-009	Tidal
ZLU10/466566-010	Imbue
ZLU11/466566-011	Reservoir
ZLU12/466566-012	Brine
ZLU13/466566-013	Undertone
ZLU14/466566-014	Prelude
ZLU15/466566-015	Submerge
ZLU16/466566-016	Cypress
ZLU17/466566-017	Awash
ZLU18/466566-018	Adriatic
ZLU19/466566-019	Province
ZLU20/466566-020	Virescent
ZLU21/466566-021	Nettle
ZLU22/466566-022	Agrarian
ZLU23/466566-023	Serpentine
ZLU24/466566-024	Laurel
ZLU25/466566-025	Clarion
ZLU26/466566-026	Gooseberry
ZLU27/466566-027	Swelter
ZLU28/466566-028	Etruscan
ZLU29/466566-029	Coulis
ZLU30/466566-030	Rubescent

Luce *continued*	
ZLU31/466566-031	Akoya
ZLU32/466566-032	Radiant
ZLU33/466566-033	Regent
ZLU34/466566-034	Spectral
ZLU35/466566-035	Thistle

Tempo – Maharam	
Ancillary	
55” wide	
100% polyester	
Polyester backing	
26S01/466589-001	Chert
26S02/466589-002	Grandstand
26S03/466589-003	Restful
26S04/466589-004	Battleship
26S05/466589-005	Lavender
26S06/466589-006	Dockside
26S07/466589-007	Swimming
26S08/466589-008	Ambience
26S09/466589-009	Adornment
26S10/466589-010	Remedy
26S11/466589-011	Fang
26S12/466589-012	Inshore
26S13/466589-013	Camouflage
26S14/466589-014	Mesclun
26S15/466589-015	Farmland
26S16/466589-016	Tadpole
26S17/466589-017	Purr
26S18/466589-018	Snowman
26S19/466589-019	Beehive
26S20/466589-020	Gazelle
26S21/466589-021	Shiitake
26S22/466589-022	Flaxseed
26S23/466589-023	Crawdad
26S24/466589-024	Flowery
26S25/466589-025	Burgundy
26S26/466589-026	Rangoli
26S27/466589-027	Petunia
26S28/466589-028	Campsite

Price category 8 continued on next page

- Maharam textiles are on assigned lead times A.
- Fabric numbers are listed as Herman Miller fabric number/Maharam fabric number.

Price Category 8
continued

Whim	
Ancillary	
54” wide	
34% viscose	
33% acrylic	
17% wool	
8% polyester	
9DA01	Warm White
9DA02	Rye
9DA03	Mustard Seed
9DA04	Terra Cotta
9DA05	Fir
9DA06	Navy
9DA07	Pewter

Price Category 9

Alpaca Mohair - Geiger Textile	
Ancillary	
54” wide	
63% alpaca	
21% cotton, 16% polyester	
18510	Dune
18511	Trench
18512	Vicuna
18570	Sepia
18571	Umber
18580	Fog
18581	Flannel
18582	Charcoal

Campana – Maharam	
Ancillary/Seating	
59” wide	
85% wool	
15% nylon	
ZC001/466571-001	Viverine
ZC002/466571-002	Lithograph
ZC003/466571-003	Moonscape
ZC004/466571-004	Brevity
ZC005/466571-005	Linear
ZC006/466571-006	Hinterland
ZC007/466571-007	Mural
ZC008/466571-008	Sloe
ZC009/466571-009	Interstellar
ZC010/466571-010	Mythology
ZC011/466571-011	Scintillate
ZC012/466571-012	Succession
ZC013/466571-013	Visceral
ZC014/466571-014	Hemisphere
ZC015/466571-015	Troposhpere
ZC016/466571-016	Skye
ZC017/466571-017	Seaward
ZC018/466571-018	Nemorous
ZC019/466571-019	Allegory
ZC020/466571-020	Olivine
ZC021/466571-021	Reptilian
ZC022/466571-022	Basil
ZC023/466571-023	Fanleaf
ZC024/466571-024	Beachgrass
ZC025/466571-025	Hayfield

Campana *continued*	
ZC026/466571-026	Freesia
ZC027/466571-027	Rhodium
ZC028/466571-028	Undercoat
ZC029/466571-029	Airbrush
ZC030/466571-030	Shellfish
ZC031/466571-031	Mojave
ZC032/466571-032	Renaissance
ZC033/466571-033	Decoupage
ZC034/466571-034	Outback
ZC035/466571-035	Millipede

Gemma – Maharam	
Ancillary/Seating	
55” wide	
85% wool	
15% nylon	
ZGE01/466568-001	Crinoline
ZGE02/466568-002	Angelic
ZGE03/466568-003	Savory
ZGE04/466568-004	Honeycomb
ZGE05/466568-005	Gilded
ZGE06/466568-006	Paddleboat
ZGE07/466568-007	Stagecoach
ZGE08/466568-008	Waterbuck
ZGE09/466568-009	Earnest
ZGE10/466568-010	Auric
ZGE11/466568-011	Carmine
ZGE12/466568-012	Serape
ZGE13/466568-013	Ferric
ZGE14/466568-014	Canyon
ZGE15/466568-015	Alembic
ZGE16/466568-016	Patio
ZGE17/466568-017	Sorrel
ZGE18/466568-018	Root

Gemma *continued*	
ZGE19/466568-019	Mansion
ZGE20/466568-020	Buff
ZGE21/466568-021	Starch
ZGE22/466568-022	Dawn
ZGE23/466568-023	Countryside
ZGE24/466568-024	Dewy
ZGE25/466568-025	Reliquary
ZGE26/466568-026	Deluge
ZGE27/466568-027	Overlay
ZGE28/466568-028	Electron
ZGE29/466568-029	Sheath
ZGE30/466568-030	Quietude
ZGE31/466568-031	Jargon
ZGE32/466568-032	Powder
ZGE33/466568-033	Tide
ZGE34/466568-034	Outwash
ZGE35/466568-035	Enamored
ZGE36/466568-036	Smitten
ZGE37/466568-037	Revere
ZGE38/466568-038	Mangosteen
ZGE39/466568-039	Allium
ZGE40/466568-040	Immense
ZGE41/466568-041	Chamber
ZGE42/466568-042	Cosmos
ZGE43/466568-043	Inkling
ZGE44/466568-044	Rainwater
ZGE45/466568-045	Shade
ZGE46/466568-046	Pendant
ZGE47/466568-047	Axial
ZGE48/466568-048	Fervent
ZGE49/466568-049	Legacy
ZGE50/466568-050	Caliber
ZGE51/466568-051	Temple
ZGE52/466568-052	Evenfall

Price category 9 continued on next page

- Maharam textiles are on assigned lead times A.
- Fabric numbers are listed as Herman Miller fabric number/Maharam fabric number.

Price Category 9
continued

Jasper - Maharam	
Ancillary/Seating	
53” wide	
55% wool	
27% solution-dyed nylon	
18% cotton	
ZJA01/466563-001	Thrill
ZJA02/466563-002	Anise
ZJA03/466563-003	Grapefruit
ZJA04/466563-004	Lifeguard
ZJA05/466563-005	Heartfelt
ZJA06/466563-006	Corsage
ZJA07/466563-007	Earthenware
ZJA08/466563-008	Bear
ZJA09/466563-009	Firelight
ZJA10/466563-010	Dreamcatcher
ZJA11/466563-011	Bobcat
ZJA12/466563-012	Glacial
ZJA13/466563-013	Vaporize
ZJA14/466563-014	Trapdoor
ZJA15/466563-015	Halcyon
ZJA16/466563-016	Observatory
ZJA17/466563-017	Steamboat
ZJA18/466563-018	Aquathlon
ZJA19/466563-019	Cloudless
ZJA20/466563-020	Briny
ZJA21/466563-021	Magical
ZJA22/466563-022	Picnic
ZJA23/466563-023	Herbage
ZJA24/466563-024	Pasture
ZJA25/466563-025	Courtyard
ZJA26/466563-026	Leapfrog

Leather	
Ancillary/Seating	
approx. 50 sq. ft. per hide	
100% leather	
2101	Ivory
2109	Black *
2110	Smoke
2111	Graphite
2112	Khaki
2113	Rattan
2114	Truffle
2115	Alpine
2116	Haze
2117	Sable Grey
2118	Dark Mineral **
2119	Dark Carbon ***
2120	Cranberry
2121	Deep Sea

* Armpad color available on Aeron® Chair, Graphite.
** Armpad color available on Aeron Chair, Mineral.
*** Armpad color available on Aeron Chair, Carbon.

Price Category 10

Bristol Leather - Geiger Textile	
Ancillary	
approx. 55 sq. ft. per hide	
100% leather	
5-507	Black
5-511	Putty
5-519	Hunter
5-520	White
5-521	Ivory
5-522	Parchment
5-537	Caribbean
5-546	Pumice
5-547	Smoke
5-548	Charcoal
5-549	Dark Shale
5-556	Downtown Grey
5-557	City Night
5-559	Ash Grey
5-563	Champagne
5-564	Chestnut Brown
5-565	Dark Sienna
5-566	Earthen
5-567	Desert
5-568	British Green
5-579	Paris Blue
5-583	Atlantic
5-592	Camel
5-594	Taupe
5-597	Pure *
5-598	Cream
5-600	Midnight Blue
5-603	Sangria
5-604	Swiss Red
5-605	Nordic Yellow
5-606	Sky Grey
5-608	Natural

* Color not available on Saiba Chair.

Firma – Maharam	
Ancillary/Seating	
55” wide	
78% wool	
22% nylon	
3KH01/466582-001	Wrath
3KH02/466582-002	Pantomime
3KH03/466582-003	Shaded
3KH04/466582-004	Prologue
3KH05/466582-005	Framework
3KH06/466582-006	Railroad
3KH07/466582-007	Grommet
3KH08/466582-008	Lunisolar
3KH09/466582-009	Snowpack
3KH10/466582-010	Coldsnap
3KH11/466582-011	Sealift
3KH12/466582-012	Brood
3KH13/466582-013	Intertidal
3KH14/466582-014	Confide
3KH15/466582-015	Secluded
3KH16/466582-016	Leisure
3KH17/466582-017	Portfolio
3KH18/466582-018	Strato
3KH19/466582-019	Fogbow
3KH20/466582-020	Snowcone
3KH21/466582-021	Kazoo
3KH22/466582-022	Esteem
3KH23/466582-023	Mackerel
3KH24/466582-024	Brooch
3KH25/466582-025	Caesious
3KH26/466582-026	Islet
3KH27/466582-027	Biosphere
3KH28/466582-028	Hilltop
3KH29/466582-029	Arboreal
3KH30/466582-030	Lineage
3KH31/466582-031	Comfrey
3KH32/466582-032	Circe
3KH33/466582-033	Ecosystem
3KH34/466582-034	Knack
3KH35/466582-035	Watt
3KH36/466582-036	Epiphany
3KH37/466582-037	Gamma
3KH38/466582-038	Taxicab
3KH39/466582-039	Varietal
3KH40/466582-040	Tale

Price category 10 continued on next page

- Maharam textiles are on assigned lead times A.
- Fabric numbers are listed as Herman Miller fabric number/Maharam fabric number.

Price Category 10
continued

Firma *continued*	
3KH41/466582-041	Elemental
3KH42/466582-042	Cuff
3KH43/466582-043	Emu
3KH44/466582-044	Tempeh
3KH45/466582-045	Tephra
3KH46/466582-046	Shellac
3KH47/466582-047	Emporium
3KH48/466582-048	Keratin
3KH49/466582-049	Camwood
3KH50/466582-050	Gloam
3KH51/466582-051	Novela
3KH52/466582-052	Fruitpunch
3KH53/466582-053	Decant
3KH54/466582-054	Milkshake
3KH55/466582-055	Metaphysic
3KH56/466582-056	Carafe
3KH57/466582-057	Voyager
3KH58/466582-058	Tenebrous
3KH59/466582-059	Subtext
3KH60/466582-060	Silent

Gemma Multi – Maharam	
Ancillary/Seating	
55” wide	
85% wool	
15% nylon	
ZGF01/466569-001	Andromeda
ZGF02/466569-002	Dappled
ZGF03/466569-003	Lyra
ZGF04/466569-004	Flaunt
ZGF05/466569-005	Celluloid
ZGF06/466569-006	Hydrozoa
ZGF07/466569-007	Firefly
ZGF08/466569-008	Pisces
ZGF09/466569-009	Strath
ZGF10/466569-010	Erosion
ZGF11/466569-011	Cabaret
ZGF12/466569-012	Candytuft
ZGF13/466569-013	Juice
ZGF14/466569-014	Fairground
ZGF15/466569-015	Copperplate
ZGF16/466569-016	Sunbird
ZGF17/466569-017	Cinematic
ZGF18/466569-018	Clairvoyant

Gemma Multi *continued*	
ZGF19/466569-019	Crocus
ZGF20/466569-020	Memoir
ZGF21/466569-021	Roulette
ZGF22/466569-022	Voltaic
ZGF23/466569-023	Compote
ZGF24/466569-024	Lambent
ZGF25/466569-025	Twister
ZGF26/466569-026	Chronicle
ZGF27/466569-027	Sidereal
ZGF28/466569-028	Tanzanite
ZGF29/466569-029	Crystalize
ZGF30/466569-030	Chromium
ZGF31/466569-031	Pallium
ZGF32/466569-032	Spectre
ZGF33/466569-033	Courgette
ZGF34/466569-034	Viper
ZGF35/466569-035	Sunlit
ZGF36/466569-036	Heavenly
ZGF37/466569-037	Vernal
ZGF38/466569-038	Cress
ZGF39/466569-039	Limn
ZGF40/466569-040	Horseradish
ZGF41/466569-041	Shandy
ZGF42/466569-042	Granary
ZGF43/466569-043	Percolate
ZGF44/466569-044	Motor
ZGF45/466569-045	Unicorn
ZGF46/466569-046	Lobster
ZGF47/466569-047	Rhododendron
ZGF48/466569-048	Taffy
ZGF49/466569-049	Rishi
ZGF50/466569-050	Backcountry
ZGF51/466569-051	Buckthorn
ZGF52/466569-052	Coniferous
ZGF53/466569-053	Delphic
ZGF54/466569-054	Hieroglyph
ZGF55/466569-055	Eiderdown
ZGF56/466569-056	Sandbar
ZGF57/466569-057	Tanager

Gemma Multi Reverse – Maharam	
Ancillary/Seating	
55” wide	
85% wool	
15% nylon	
ZGF58/466569-101	Andromeda Reverse
ZGF59/466569-102	Dappled Reverse
ZGF60/466569-103	Lyra Reverse
ZGF61/466569-104	Flaunt Reverse
ZGF62/466569-105	Celluloid Reverse
ZGF63/466569-106	Hydrozoa Reverse
ZGF64/466569-107	Firefly Reverse
ZGF65/466569-108	Pisces Reverse
ZGF66/466569-109	Strath Reverse
ZGF67/466569-110	Erosion Reverse
ZGF68/466569-111	Cabaret Reverse
ZGF69/466569-112	Candytuft Reverse
ZGF70/466569-113	Juice Reverse
ZGF71/466569-114	Fairground Reverse
ZGF72/466569-115	Copperplate Reverse
ZGF73/466569-116	Sunbird Reverse
ZGF74/466569-117	Cinematic Reverse
ZGF75/466569-118	Clairvoyant Reverse
ZGF76/466569-119	Crocus Reverse
ZGF77/466569-120	Memoir Reverse

Gemma Multi Reverse *continued*	
ZGF78/466569-121	Roulette Reverse
ZGF79/466569-122	Voltaic Reverse
ZGF80/466569-123	Compote Reverse
ZGF81/466569-124	Lambent Reverse
ZGF82/466569-125	Twister Reverse
ZGF83/466569-126	Chronicle Reverse
ZGF84/466569-127	Sidereal Reverse
ZGF85/466569-128	Tanzanite Reverse
ZGF86/466569-129	Crystalize Reverse
ZGF87/466569-130	Chromium Reverse
ZGF88/466569-131	Pallium Reverse
ZGF89/466569-132	Spectre Reverse
ZGF90/466569-133	Courgette Reverse
ZGF91/466569-134	Viper Reverse
ZGF92/466569-135	Sunlit Reverse
ZGF93/466569-136	Heavenly Reverse
ZGF94/466569-137	Vernal Reverse
ZGF95/466569-138	Cress Reverse
ZGF96/466569-139	Limn Reverse
ZGF97/466569-140	Horseradish Reverse
ZGF98/466569-141	Shandy Reverse
ZGF99/466569-142	Granary Reverse

- Maharam textiles are on assigned lead times A.
- Fabric numbers are listed as Herman Miller fabric number/Maharam fabric number.

Price category 10 continued on next page

Price Category 10
continued

Gemma Multi Reverse *continued*	
ZGFA0/466569-143	Percolate Reverse
ZGFA1/466569-144	Motor Reverse
ZGFA2/466569-145	Unicorn Reverse
ZGFA3/466569-146	Lobster Reverse
ZGFA4/466569-147	Rhododendron Reverse
ZGFA5/466569-148	Taffy Reverse
ZGFA6/466569-149	Rishi Reverse
ZGFA7/466569-150	Backcountry Reverse
ZGFA8/466569-151	Buckthorn Reverse
ZGFA9/466569-152	Coniferous Reverse
ZGFB0/466569-153	Delphic Reverse
ZGFB1/466569-154	Hieroglyph Reverse
ZGFB2/466569-155	Eiderdown Reverse
ZGFB3/466569-157	Tanager Reverse

Petra - Maharam	
Ancillary/Seating	
55” wide	
70% wool	
19% linen	
11% nylon	
ZP401/466580-001	Hieroglyph
ZP402/466580-002	Interior
ZP403/466580-003	Samovar
ZP404/466580-004	Calcite
ZP405/466580-005	Silversmith
ZP406/466580-006	Rivet
ZP407/466580-007	Carpolite
ZP408/466580-008	Bonbon

Petra *continued*	
ZP409/466580-009	Dreamy
ZP410/466580-010	Bejewel
ZP411/466580-011	Sashimi
ZP412/466580-012	Spirula
ZP413/466580-013	Chalet
ZP414/466580-014	Reindeer
ZP415/466580-015	Nostalgia
ZP416/466580-016	Trove
ZP417/466580-017	Narcissus
ZP418/466580-018	Yurt
ZP419/466580-019	Congee
ZP420/466580-020	Genepy
ZP421/466580-021	Herbaceous
ZP422/466580-022	Paddock
ZP423/466580-023	Precious
ZP424/466580-024	Biome
ZP425/466580-025	Tinted
ZP426/466580-026	Pelagic
ZP427/466580-027	Bluebill
ZP428/466580-028	Chicory
ZP429/466580-029	Eaglet
ZP430/466580-030	Permafrost
ZP431/466580-031	Atlantic
ZP432/466580-032	Airstream
ZP433/466580-033	Debonair

Superweave - Maharam	
Ancillary	
54” wide	
75% polyester	
25% cotton	
Z2203/466241-005	Sienna
Z2204/466241-002	Ochre
Z2207/466241-004	Marine
Z2208/466241-003	Olive
Z2220/466241-001	Orange and Pink

Price Category 11

Felix - Maharam	
Ancillary/Seating	
85% wool	
15% nylon	
3BS01	Angular
3BS02	Shark
3BS03	Easy
3BS04	Cue
3BS05	Rye
3BS06	Champion
3BS07	Between
3BS08	Propose
3BS09	Rising
3BS10	Tile
3BS11	Place
3BS12	Kernel
3BS13	Pinnacle
3BS14	Darling
3BS15	Seasonal
3BS16	Shipmate
3BS17	Jump
3BS18	Geyser
3BS19	Team

Prone Leather - Maharam	
Ancillary	
approx. 50 sq. ft. per hide	
100% leather	
protective top coat	
1NX01/700020-001	Lotus
1NX02/700020-002	Timbre
1NX03/700020-003	Essence
1NX04/700020-004	Script
1NX05/700020-005	Gambit
1NX06/700020-006	Obsidian
1NX07/700020-007	Sail
1NX09/700020-009	Vine
1NX10/700020-010	Yarrow
1NX13/700020-013	Balsa
1NX14/700020-014	Shore
1NX15/700020-015	Bricolage
1NX17/700020-017	Ledge
1NX19/700020-019	Mantra
1NX20/700020-020	Java
1NX21/700020-021	Lute
1NX22/700020-022	Glow
1NX23/700020-023	Hickory

Tenera Leather - Geiger Textile	
Ancillary	
approx. 55 sq. ft. per hide	
100% leather	
17501	Cement
17502	Marzipan
17504	Raw Sienna
17505	Maple
17508	Cranberry
17510	Dark Chocolate
17511	Black
17512	Carbon
17513	Sapphire

- Maharam textiles are on assigned lead times A.
- Fabric numbers are listed as Herman Miller fabric number/Maharam fabric number.

Price Category 12-13

No fabrics available at this time.

Price Category 14

Lanalux - Maharam	
Ancillary	
54” wide	
100% wool	
Z1375/466240-005	Black/White
Z1378/466240-006	Olive/Black
Z1380/466240-001	Natural
Z1383/466240-002	Umber
Z1384/466240-007	Natural/Black
Z1386/466240-003	Orange
Z1387/466240-004	Crimson

Price Category A

No fabrics available at this time.

Price Category B

Medium – Maharam	
Ancillary/Seating/Workspaces	
54” wide	
100% polyester	
VM01/463490-001	Raven
VM02/463490-002	Smoke
VM03/463490-003	Alloy
VM04/463490-004	Flax
VM07/463490-007	Espresso
VM14/463490-014	Laser
VM16/463490-016	Port
VM22/463490-022	Marina
VM29/463490-029	Pistachio
VM32/463490-032	Prospect
VM36/463490-036	Delight
VM39/463490-039	Nautical
VM40/463490-040	Pool
VM44/463490-044	Washed
VM45/463490-045	Sculpture
VM46/463490-046	Thatched
VM47/463490-047	Hike
VM48/463490-048	Tangle
VM49/463490-049	Pacific
VM50/463490-050	Cosmic
VM51/463490-051	Cascade
VM52/463490-052	Blackberry
VM53/463490-053	Nasturtium

Messenger – Maharam	
Ancillary/Seating/Workspaces	
54” wide	
78% post-industrial recycled polyester	
15% polyester, 7% nylon	
TI07/458640-007	Shadow
TI08/458640-008	Bayou *
TI24/458640-024	Poppy
TI25/458640-025	Mao
TI29/458640-029	Onyx *
TI31/458640-031	Cloud *
TI38/458640-038	Depth *
TI40/458640-040	Nile *
TI41/458640-041	Azure *

Price category B continued on next page

- Maharam textiles are on assigned lead times A.
- Fabric numbers are listed as Herman Miller fabric number/Maharam fabric number.

Price Category B
continued

Messenger *continued*	
TI45/458640-045	Cactus *
TI46/458640-046	Ice * **
TI48/458640-048	Neon
TI50/458640-050	Hydrangea
TI53/458640-053	Tangelo
TI54/458640-054	Lumine *
TI58/458640-058	Snow ** ***
TI60/458640-060	Peridot
TI61/458640-061	Capri *
TI62/458640-062	Ultramarine
TI63/458640-063	Squall
TI66/458640-066	Cassis
TI67/458640-067	Aster
TI69/458640-069	Cherry
TI70/458640-070	Vibrant
TI71/458640-071	Satsuma *
TI72/458640-072	Maize
TI76/458640-076	Fossil
TI77/458640-077	Ash
TI78/458640-078	Tusk
TI79/458640-079	Oyster **
TI81/458640-081	Husk
TI84/458640-084	Robust
TI85/458640-085	Beyond
TI86/458640-086	Voyage *
TI87/458640-087	Everglade
TI89/458640-089	Blanch ***
TI90/458640-090	Longspur
TI91/458640-091	Vireo
TI92/458640-092	Dipper
TI93/458640-093	Gale
TI94/458640-094	Hunter
TI95/458640-095	Lime
TI96/458640-096	Apple
TI97/458640-097	Krill
TI98/458640-098	Catalyst

* Colors available on 20-day lead time.
** Colors not available on Eames Molded Fiberglass and Molded Plastic Side Chairs.
*** Colors not available on Valor Seating.

Price Category C

Manner - Maharam	
Ancillary/Seating/Workspaces	
54” wide	
65% post-industrial	
recycled polyester	
35% post-consumer	
recycled polyester	
Z2701/466177-001	Magic
Z2702/466177-002	Carob
Z2703/466177-003	Porpoise
Z2704/466177-004	Flint
Z2705/466177-005	Hush *
Z2706/466177-006	Nuance
Z2711/466177-011	Ember
Z2712/466177-012	Wagon
Z2713/466177-013	Ablaze
Z2714/466177-014	Peel
Z2716/466177-016	Butterscotch
Z2717/466177-017	Harvest
Z2720/466177-020	Parakeet
Z2722/466177-022	Aquatic
Z2723/466177-023	Cottage
Z2724/466177-024	Dahlia
Z2725/466177-025	Vivid
Z2726/466177-026	Basin
Z2727/466177-027	Schooner
Z2728/466177-028	Slope
Z2729/466177-029	Silverpoint
Z2730/466177-030	Lattice
Z2731/466177-031	Smoky
Z2732/466177-032	Magnetic
Z2733/466177-033	Woad
Z2734/466177-034	Resolute
Z2735/466177-035	Cruise
Z2736/466177-036	Atmospheric
Z2737/466177-037	Cloudburst
Z2738/466177-038	Tidewater
Z2739/466177-039	Firth
Z2740/466177-040	Oceanside
Z2741/466177-041	Grandeur
Z2742/466177-042	Comfort
Z2743/466177-043	Dill
Z2744/466177-044	Poplar
Z2745/466177-045	Citronella
Z2746/466177-046	Passerine

Manner *continued*	
Z2747/466177-047	Southwest
Z2748/466177-048	Roseate
Z2749/466177-049	Charisma
Z2750/466177-050	Siltstone
Z2751/466177-051	Kimono
Z2752/466177-052	Valiant
Z2753/466177-053	Baroness

* Color not available on Eames Aluminum Group, Executive Chairs, Upholstered Molded Plywood Chairs, and Sofa Compact.

Merit - Maharam	
Ancillary/Seating	
54” wide	
76% post-industrial	
recycled polyester	
24% polyester	
PFOA-Free stain resistant	
88Z01/466444-001	Trickle
88Z02/466444-002	Beluga
88Z03/466444-003	Gunmetal
88Z04/466444-004	Blackout
88Z05/466444-005	Superior
88Z06/466444-006	Ocean
88Z07/466444-007	Highborn
88Z08/466444-008	Immersed
88Z09/466444-009	Rainfall
88Z10/466444-010	Blizzard
88Z11/466444-011	Poolside
88Z12/466444-012	Steel
88Z13/466444-013	Zircon
88Z14/466444-014	Ripple
88Z15/466444-015	Aegean
88Z16/466444-016	Armada
88Z17/466444-017	Hedera
88Z18/466444-018	Rainforest
88Z19/466444-019	Gator
88Z20/466444-020	Vineyard
88Z21/466444-021	Pine
88Z22/466444-022	Kiwi
88Z23/466444-023	Kookaburra

Merit *continued*	
88Z24/466444-024	Bellini
88Z25/466444-025	Sunflower
88Z26/466444-026	Sandstorm
88Z27/466444-027	Mudder
88Z28/466444-028	Lynx
88Z29/466444-029	Farro
88Z30/466444-030	Manila
88Z31/466444-031	Starfish
88Z32/466444-032	Brass
88Z33/466444-033	Arrow
88Z34/466444-034	Gelato
88Z35/466444-035	Nectarine
88Z36/466444-036	Macaron
88Z37/466444-037	Alert
88Z38/466444-038	Goji
88Z39/466444-039	Cabernet
88Z40/466444-040	Eggplant
88Z41/466444-041	Hawk
88Z42/466444-042	Stag
88Z43/466444-043	Overcast

Metric – Maharam	
Ancillary/Seating/Workspaces	
54” wide	
51% post-industrial	
recycled polyester	
49% polyester	
Z302/466014-002	Fog
Z303/466014-003	Fleece
Z312/466014-012	Cardinal
Z313/466014-013	Lava
Z318/466014-018	Pollen
Z320/466014-020	Alligator
Z323/466014-023	Tar
Z324/466014-024	Anchor
Z326/466014-026	Admiral
Z327/466014-027	Seaport
Z328/466014-028	Scuba
Z329/466014-029	Skate
Z330/466014-030	Hopscotch
Z331/466014-031	Film
Z332/466014-032	Whale
Z333/466014-033	Downpour
Z334/466014-034	Midday

Price category C continued on next page

- Maharam textiles are on assigned lead times A.
- Fabric numbers are listed as Herman Miller fabric number/Maharam fabric number.

Price Category C
continued

Metric *continued*	
Z335/466014-035	Talisman
Z336/466014-036	Hedgerow
Z337/466014-037	Snorkel
Z338/466014-038	Highway
Z339/466014-039	Canary
Z340/466014-040	Sunny
Z341/466014-041	Aztec
Z342/466014-042	Fruit
Z343/466014-043	Galah
Z344/466014-044	Kiln
Z345/466014-045	Moth

Murmur - Maharam	
Ancillary/Seating	
55” wide	
100% polyester	
PFOA-Free stain resistant	
8EY01/466446-001	Gust
8EY02/466446-002	Harmonica
8EY03/466446-003	Canopy
8EY04/466446-004	Dim
8EY05/466446-005	Peppercorn
8EY06/466446-006	Cauldron
8EY07/466446-007	Conquer
8EY08/466446-008	Rapids
8EY09/466446-009	Seawater
8EY10/466446-010	Baby
8EY11/466446-011	Elderberry
8EY12/466446-012	Iceberg
8EY13/466446-013	Tallgrass
8EY14/466446-014	Underground
8EY15/466446-015	Biome
8EY16/466446-016	Cask
8EY17/466446-017	Argan
8EY18/466446-018	Sundown
8EY19/466446-019	Ignite
8EY20/466446-020	Sultry
8EY21/466446-021	Sangria

Price Category D

Bluff - Maharam	
Ancillary/Seating	
54” wide	
100% polyurethane	
Ink-resistant protective top coat	
Polyester backing	
8I801/466489-001	Loom
8I802/466489-002	Helm
8I803/466489-003	Cruller
8I804/466489-004	Folklore
8I805/466489-005	Beguile
8I806/466489-006	Sherpa
8I807/466489-007	Teleport
8I808/466489-008	Annex
8I809/466489-009	Lorimer
8I810/466489-010	Cinema
8I811/466489-011	Zip
8I812/466489-012	Coach
8I813/466489-013	Supernova
8I814/466489-014	Pirate
8I815/466489-015	Academy
8I816/466489-016	Disco
8I817/466489-017	Equator
8I818/466489-018	Brink
8I819/466489-019	Scene
8I820/466489-020	Petrichor
8I821/466489-021	Exotic
8I822/466489-022	Fauna
8I823/466489-023	Calabash
8I824/466489-024	Fuscous
8I825/466489-025	Wildling
8I826/466489-026	Blitz
8I827/466489-027	Allspice
8I828/466489-028	Lumos
8I829/466489-029	Pilot
8I830/466489-030	Jukebox
8I831/466489-031	Dugout
8I832/466489-032	Claret
8I833/466489-033	Flamenco

Mode – Maharam	
Ancillary/Seating/Workspaces	
54” wide	
80% post-consumer recycled polyester	
20% polyester	
PFOA-Free stain resistant finish	
ZMD01/466337-001	Stroll
ZMD02/466337-002	Intaglio
ZMD03/466337-003	Ominous
ZMD04/466337-004	Machine
ZMD05/466337-005	Talus
ZMD06/466337-006	Marsh
ZMD07/466337-007	Hollow
ZMD08/466337-008	Sycamore
ZMD09/466337-009	Clavicle
ZMD10/466337-010	Billygoat
ZMD11/466337-011	Spindle
ZMD12/466337-012	Lemon
ZMD13/466337-013	Oxeye
ZMD14/466337-014	Henge
ZMD15/466337-015	Goldenrod
ZMD16/466337-016	Cottontail
ZMD17/466337-017	Lioness
ZMD18/466337-018	Oriole
ZMD19/466337-019	Rust
ZMD20/466337-020	Carotene
ZMD21/466337-021	Blush
ZMD22/466337-022	Vermilion
ZMD23/466337-023	Alder
ZMD24/466337-024	Kermes
ZMD25/466337-025	Barberry
ZMD26/466337-026	Petal
ZMD27/466337-027	Valley
ZMD28/466337-028	Odyssey
ZMD29/466337-029	Ballpoint
ZMD30/466337-030	Toile
ZMD31/466337-031	Paradise

Mode *continued*	
ZMD32/466337-032	Angelfish
ZMD33/466337-033	Denim
ZMD34/466337-034	Crush
ZMD35/466337-035	Jetty
ZMD36/466337-036	Saltwater
ZMD37/466337-037	Mallard
ZMD38/466337-038	Celtic
ZMD39/466337-039	Eucalyptus
ZMD40/466337-040	Bonsai
ZMD41/466337-041	Sassafras
ZMD42/466337-042	Yucca
ZMD43/466337-043	Lichen

Spiral - Maharam	
Workspaces	
66” wide	
100% polyester	
ZS301/901882-001	Chalk
ZS303/901882-003	Wheat
ZS304/901882-004	Mica
ZS305/901882-005	Pavement
ZS306/901882-006	Graphite

- Maharam textiles are on assigned lead times A.
- Fabric numbers are listed as Herman Miller fabric number/Maharam fabric number.

Price Category E

Article – Maharam	
Ancillary/Seating	
54” wide	
100% vinyl	
ZAT08/458600-008	Marina
ZAT13/458600-013	Flume
ZAT14/458600-014	Storm
ZAT15/458600-015	Toast
ZAT19/458600-019	Fleece
ZAT22/458600-022	Stone
ZAT26/458600-026	Mercury
ZAT29/458600-029	Bluegrass
ZAT31/458600-031	Truffle
ZAT32/458600-032	Gravel
ZAT33/458600-033	Value
ZAT34/458600-034	Tint
ZAT35/458600-035	Snowflake
ZAT36/458600-036	Chalice
ZAT37/458600-037	Trail
ZAT38/458600-038	Pyramid
ZAT39/458600-039	Desert
ZAT40/458600-040	Lei
ZAT41/458600-041	Rouge
ZAT42/458600-042	Karma
ZAT43/458600-043	Opal
ZAT44/458600-044	Periwinkle
ZAT45/458600-045	Vampire
ZAT46/458600-046	Surf
ZAT47/458600-047	Plumage

Flock - Maharam	
Workspaces	
63” wide	
100% polyester	
ZF301/901892-001	Calm
ZF302/901892-002	Course
ZF303/901892-003	Highlight
ZF305/901892-005	Poppy
ZF306/901892-006	Briefcase
ZF307/901892-007	Monkstrap
ZF308/901892-008	Quag
ZF309/901892-009	Pistachio
ZF310/901892-010	Froth
ZF311/901892-011	Celadon
ZF312/901892-012	Highsea
ZF313/901892-013	China
ZF314/901892-014	Victorian
ZF315/901892-015	Commander
ZF316/901892-016	Raven
ZF317/901892-017	Aluminum

Micro – Maharam	
Ancillary	
54” wide	
100% vinyl	
ZMB01/466099-001	Muslin
ZMB04/466099-004	Basalt
ZMB06/466099-006	Phantom
ZMB07/466099-007	Depth
ZMB08/466099-008	Cottage
ZMB09/466099-009	Hunter
ZMB11/466099-011	Tomatillo
ZMB12/466099-012	Brew
ZMB14/466099-014	Tang
ZMB15/466099-015	Risk

Parallel — Maharam	
Workspaces	
66” wide	
100% recycled polyester	
TT03/901180-003	Fog
TT22/901180-022	Sterling
TT23/901180-023	Linen
TT24/901180-024	Pea
TT27/901180-027	Boulder
TT28/901180-028	Stream
TT29/901180-029	Shiitake
TT32/901180-032	Brandy
TT33/901180-033	Crater
TT36/901180-036	Quail

Price Category F

Apt – Maharam	
Ancillary/Seating	
54” wide	
100% polyurethane/silicone	
Ink-resistant protective top coat	
Polyester backing	
82T12/466392-012	Iris
82T13/466392-013	Nocturnal
82T14/466392-014	Fluid
82T15/466392-015	Eden
82T16/466392-016	Galactic
82T17/466392-017	Shoreline
82T18/466392-018	Jade
82T19/466392-019	Garden
82T20/466392-020	Botanic
82T21/466392-021	Chartreuse
82T23/466392-023	Lyric
82T24/466392-024	Turmeric
82T25/466392-025	Bengal
82T26/466392-026	Core
82T27/466392-027	Mantle
82T28/466392-028	Sorbet
82T32/466392-032	Oak
82T33/466392-033	Castle
82T34/466392-034	Follow
82T35/466392-035	Elixir
82T36/466392-036	Charm
82T37/466392-037	Descend
82T38/466392-009	Sketch
82T39/466392-010	Glacier
82T40/466392-031	Fortress
82T41/466392-030	Lotus
82T42/466392-001	Coconut
82T43/466392-011	Cobblestone
82T44/466392-029	Bloom
82T45/466392-022	Crepe
82T46/466392-006	Hickory
82T47/466392-007	Constellation
82T48/466392-008	Labyrinth
82T49/466392-002	Vibe
82T50/466392-003	Stampede
82T51/466392-004	Lumber
82T52/466392-005	Gingerbread

Price category F continued on next page

- Maharam textiles are on assigned lead times A.
- Fabric numbers are listed as Herman Miller fabric number/Maharam fabric number.

Price Category F
continued

Brindle - Maharam
Ancillary/Seating
58” wide
100% polyester
PFOA-free stain resistant
Acrylic backing

87101/466418-001	Calico
87102/466418-002	Mauve
87103/466418-003	Torch
87104/466418-004	Burnt
87105/466418-005	Barn
87106/466418-006	Pharaoh
87107/466418-007	Sandbur
87108/466418-008	Jungle
87109/466418-009	Inland
87110/466418-009	Seagrass
87111/466418-009	Watercolor
87112/466418-009	Aquarium
87113/466418-009	Drill

Chime - Maharam
Ancillary
54” wide
100% vinyl

V9M3/465350-003	Morel
V9MB/465350-011	Tranquil
V9MJ/465350-020	Slate
V9MV/465350-031	Verve
V9MW/465350-032	Understory

Conduit - Maharam
Ancillary/Seating
58” wide
100% polyester
PFOA-free stain resistant
Acrylic backing

87Z01/466428-001	Space
87Z02/466428-002	Syrup
87Z03/466428-003	Nimbus
87Z04/466428-004	Greystone
87Z05/466428-005	Fawn
87Z06/466428-006	Ghost
87Z07/466428-007	Caribbean
87Z08/466428-008	Canal
87Z09/466428-009	Bonfire

Emit – Maharam
Workspaces
54” wide
55% post-industrial recycled polyester
45% post-consumer recycled polyester
PFOA-free stain resistant

8EX01/466378-001	Wed
8EX02/466378-002	Zebra
8EX03/466378-003	Chiffon
8EX05/466378-005	Nectar
8EX06/466378-006	Elk
8EX08/466378-008	Goldenrod
8EX09/466378-009	Beached
8EX10/466378-010	Samba
8EX11/466378-011	Nest
8EX14/466378-014	Groove
8EX17/466378-017	Haiku
8EX18/466378-018	Bluefin
8EX19/466378-019	Flow
8EX20/466378-020	Xenon
8EX21/466378-021	Artem
8EX22/466378-022	Zen
8EX25/466378-025	Limeade

Instill – Maharam
Ancillary/Seating
54” wide
100% polyurethane
Ink-resistant protective top coat
Polyester backing

74M01/466351-001	Page
74M02/466351-002	Limestone
74M03/466351-003	Bobwhite
74M04/466351-004	Loafer
74M07/466351-007	Shaker
74M08/466351-008	Doe
74M09/466351-009	Ride
74M10/466351-010	Squire
74M11/466351-011	Tannin
74M12/466351-012	Vitis
74M14/466351-014	Quail
74M15/466351-015	Brittanic
74M16/466351-016	Narwhal
74M18/466351-018	Stowaway
74M19/466351-019	Koala
74M20/466351-020	Dorsal
74M21/466351-021	Stealth
74M22/466351-022	Mosey
74M23/466351-023	Beachfront
74M24/466351-024	Discovery
74M25/466351-025	Grasp
74M26/466351-026	Arboreous
74M27/466351-027	Yearling
74M28/466351-028	Allele
74M29/466351-029	Eager
74M30/466351-030	Rise
74M31/466351-031	Latte
74M32/466351-032	Compose
74M33/466351-033	Furrow
74M34/466351-034	Tenor
74M35/466351-035	Annatto
74M36/466351-036	Together
74M37/466351-037	Intention
74M38/466351-038	Overnight
74M39/466351-039	Icecap
74M40/466351-040	Metamorphic
74M41/466351-041	Anthracite

Keen - Maharam
Ancillary/Seating
54” wide
61% polyester
39% polyolefin
PFOA-Free stain resistant
Acrylic backing

89N01/466433-001	Gaur
89N02/466433-002	Lock
89N03/466433-003	Elk
89N04/466433-004	Oatmeal
89N05/466433-005	Lakefront
89N06/466433-006	Argent
89N07/466433-007	Coyote
89N08/466433-008	Eventide
89N09/466433-009	Canal
89N10/466433-010	Rosemary
89N11/466433-011	Herb
89N12/466433-012	Ruby
89N13/466433-013	Loganberry

Ledger – Maharam
Ancillary/Seating
54” wide
100% polyurethane

V9G1/463770-001	001
V9G2/463770-002	002
V9G3/463770-003	003
V9G4/463770-004	004
V9GG/463770-017	017
V9GQ/463770-025	025
V9GS/463770-026	026
V9GU/463770-028	028
V9GV/463770-029	029
V9GW/463770-030	030
V9GX/463770-031	031
V9GY/463770-032	032
V9G18/463770-042	042
V9G19/463770-043	043
V9G20/463770-044	044
V9G21/463770-045	045
V9G22/463770-046	046

Price category F continued on next page

- Maharam textiles are on assigned lead times A.
- Fabric numbers are listed as Herman Miller fabric number/Maharam fabric number.

Price Category F
continued

Loop - Maharam	
Ancillary/Seating	
57” wide	
48% post-industrial recycled polyester	
26% polyester	
26% post-consumer recycled polyester	
PFOA-Free stain resistant Acrylic Backing	
ZLL01/466469-001	Opossum
ZLL02/466469-002	Foundation
ZLL03/466469-003	Naval
ZLL04/466469-004	Buoyant
ZLL05/466469-005	Mockingbird
ZLL06/466469-006	Dynasty
ZLL07/466469-007	Zori
ZLL08/466469-008	Wildfire
ZLL09/466469-009	Floral
ZLL10/466469-010	Penguin

Multiply - Maharam	
Ancillary/Seating	
58” wide	
57% post-consumer recycled polyester	
43% post-industrial recycled polyester	
PFOA-Free stain resistant Acrylic Backing	
82A01/466341-001	Winter
82A02/466341-002	Encore
82A03/466341-003	Swing
82A04/466341-004	Contrast
82A05/466341-005	Sterling
82A06/466341-006	Daze
82A07/466341-007	Sway
82A08/466341-008	Sailor
82A09/466341-009	Mystique
82A10/466341-010	Deep
82A11/466341-011	Craft
82A12/466341-012	Town
82A13/466341-013	Limit
82A14/466341-014	Tamale

Pitch - Maharam	
Ancillary	
54” wide	
100% vinyl	
ZPC04/466186-004	Pollen
ZPC07/466186-007	Apple
ZPC11/466186-011	Voyage
ZPC12/466186-012	Turquoise
ZPC14/466186-014	Inlet
ZPC15/466186-015	Captain
ZPC16/466186-016	Aura
ZPC17/466186-017	Coastal
ZPC18/466186-018	Fog
ZPC19/466186-019	Coal
ZPC21/466186-021	Mulberry
ZPC24/466186-024	Flame
ZPC26/466186-026	Tumbleweed
ZPC29/466186-029	Subtle
ZPC30/466186-030	Buff

Pepper - Maharam	
Ancillary/Seating	
58” wide	
49% polyester	
41% post-industrial recycled polyester	
10% post-consumer recycled polyester	
PFOA-Free stain resistant Acrylic Backing	
8LW01/466486-001	Dojo
8LW02/466486-002	Marengo
8LW03/466486-003	Harlequin
8LW04/466486-004	Pavlova
8LW06/466486-006	Achiote
8LW07/466486-007	Essence
8LW08/466486-008	Genome
8LW09/466486-009	Myriad
8LW10/466486-010	Terrarium

Scuba - Maharam	
Ancillary	
54” wide	
100% polyurethane	
V9B1/464930-001	Vanilla
V9B5/464930-005	Chinchilla
V9B6/464930-006	Mahogany
V9B7/464930-007	Jet
V9B8/464930-008	Charcoal
V9B9/464930-009	Dolphin
V9BA/464930-010	Drizzle
V9BC/464930-012	Conifer
V9BD/464930-013	Bottle
V9BF/464930-015	Tourmaline
V9BG/464930-016	Sapphire
V9BH/464930-017	Electric
V9BL/464930-020	Cabernet
V9BM/464930-021	Brick
V9BN/464930-022	Coral
V9BP/464930-023	Autumn

Strum - Maharam	
Ancillary/Seating	
54” wide	
100% polyurethane with silane-based antimicrobial	
Z3301/466122-001	Overcast
Z3302/466122-002	Ridge
Z3304/466122-004	Pigeon
Z3307/466122-007	Bur
Z3308/466122-008	Abalone
Z3312/466122-012	Lemongrass

Price Category G

Compound - Maharam	
Ancillary/Seating	
54” wide	
100% polyurethane with silane-based antimicrobial	
ZC201/466196-001	Quartz
ZC203/466196-003	Weathered
ZC204/466196-004	Cliff
ZC205/466196-005	Espresso
ZC206/466196-006	Smolder
ZC207/466196-007	Blaze
ZC208/466196-008	Mandarin
ZC209/466196-009	Maple
ZC210/466196-010	Perennial
ZC211/466196-011	Mountainside
ZC212/466196-012	Tundra
ZC213/466196-013	Manatee
ZC214/466196-014	Marine
ZC215/466196-015	Twilight
ZC216/466196-016	Shelter
ZC217/466196-017	Vessel
ZC218/466196-018	Smoke
ZC219/466196-019	Fog

Fluent Crypton - Maharam	
Ancillary	
54” wide	
52% polyester	
31% post-industrial recycled polyester	
17% post-consumer recycled polyester	
ZFC01/466073-001	Lynx
ZFC12/466073-012	Bayou
ZFC13/466073-013	Bottle
ZFC14/466073-014	Cadet
ZFC22/466073-022	Turf
ZFC24/466073-024	Steady

Price category G continued on next page

- Maharam textiles are on assigned lead times A.
- Fabric numbers are listed as Herman Miller fabric number/Maharam fabric number.

Price Category G
continued

Fold - Maharam	
Seating	
54” wide	
100% polyurethane	
Polyester backing	
ZF101/466292-001	Jet
ZF102/466292-002	Chalk
ZF103/466292-003	Smoke
ZF105/466292-005	Fatigue
ZF106/466292-006	Splash
ZF107/466292-007	Apple
ZF108/466292-008	Moss
ZF110/466292-010	Midnight

Gild - Maharam	
Ancillary/Seating	
54” wide	
100% non-phthalate vinyl	
Ink-resistant protective top coat	
Polyester backing	
8AR01/466432-005	Grapevine
8AR02/466432-009	Frosting
8AR03/466432-007	Smokey
8AR04/466432-003	Skylight
8AR05/466432-011	Sandstone
8AR06/466432-004	Hurricane
8AR07/466432-002	Wreath
8AR08/466432-001	Rainforest
8AR09/466432-012	Fudge
8AR10/466432-010	Lantern
8AR11/466432-006	Planet
8AR12/466432-008	Reflection

Pare – Maharam	
Ancillary/Seating	
54” wide	
52% wool	
26% polyester	
22% nylon	
PFOA-free stain resistant finish	
ZPR01/466359-001	Polaris
ZPR04/466359-004	Fresco
ZPR06/466359-006	Wink
ZPR07/466359-007	Concord
ZPR08/466359-008	Strawberry
ZPR09/466359-009	Solar
ZPR10/466359-010	Amulet
ZPR11/466359-011	Zest
ZPR12/466359-012	Elmwood
ZPR13/466359-013	Thyme
ZPR17/466359-017	Blueberry

Runner - Maharam	
Ancillary/Seating	
54” wide	
57% post-industrial	
recycled polyester	
43% post-consumer	
recycled polyester	
ZRF01/466108-001	Bluff
ZRF03/466108-003	Grove
ZRF04/466108-004	Starboard
ZRF05/466108-005	Plot
ZRF06/466108-006	Carousel

Sudden – Maharam	
Ancillary	
54” wide	
100% polyurethane	
ZSD02/463000-002	002
ZSD03/463000-003	003
ZSD05/463000-005	005
ZSD06/463000-006	006
ZSD07/463000-007	007
ZSD08/463000-008	008
ZSD09/463000-009	009
ZSD10/463000-010	010
ZSD11/463000-011	011
ZSD13/463000-013	013
ZSD15/463000-015	015
ZSD16/463000-016	016
ZSD17/463000-017	017
ZSD18/463000-018	018
ZSD19/463000-019	019
ZSD20/463000-020	020
ZSD24/463000-024	024
ZSD27/463000-027	027
ZSD36/463000-036	036

Price Category H

Anagram - Maharam	
Ancillary	
54” wide	
42% cotton	
32% polyester	
26% nylon	
ZAN01/466067-001	Quarry
ZAN02/466067-002	Hush
ZAN03/466067-003	Electric
ZAN04/466067-004	Range
ZAN05/466067-005	Settle

Circles — Maharam	
Ancillary/Seating	
55” wide	
70% cotton	
30% polyester	
ZT01/458310-001	Khaki
ZT02/458310-002	Fatigue
ZT03/458310-003	Document
ZT04/458310-004	Engine

Dot Pattern — Maharam	
Ancillary/Seating	
55” wide	
71% cotton	
29% polyester	
ZK01/458300-001	Document
ZK02/458300-002	Taupe
ZK04/458300-004	Red
ZK05/458300-005	Navy

Mechanism – Maharam	
Ancillary	
54” wide	
100% polyester	
ZMC01/465952-001	Mercury
ZMC10/465952-010	Pearl
ZMC11/465952-011	Bronze
ZMC13/465952-013	Titanium
ZMC15/465952-015	Tangerine
ZMC17/465952-017	Sprout

Price category H continued on next page

- Maharam textiles are on assigned lead times A.
- Fabric numbers are listed as Herman Miller fabric number/Maharam fabric number.

Price Category H
continued

Mister – Maharam
Ancillary
54” wide
67% solution-dyed acrylic
33% solution-dyed polyester

ZMG01/466178-001	Breeze
ZMG04/466178-004	Enliven
ZMG05/466178-005	Notice
ZMG06/466178-006	Azurite

Regatta – Maharam
Ancillary
54” wide
65% solution-dyed acrylic
35% solution-dyed polyester

ZRT01/466189-001	Drift
ZRT02/466189-002	Parasol
ZRT04/466189-004	Swell

Small Dot Pattern — Maharam
Ancillary/Seating
55” wide
71% cotton
29% polyester

ZL01/458320-001	Document
ZL02/458320-002	Sand
ZL03/458320-003	Khaki
ZL04/458320-004	Taupe
ZL05/458320-005	Charcoal
ZL06/458320-006	Document Reverse
ZL07/458320-007	Red
ZL08/458320-008	Yellow
ZL09/458320-009	Green

Price Category I

Colorwheel – Maharam
Ancillary
54” wide
62% cotton
38% solution-dyed
post-industrial recycled nylon

ZCW02/466163-002	Pumice
ZCW03/466163-003	Viridian
ZCW06/466163-006	Charcoal
ZCW07/466163-007	Carbon

Cursive – Maharam
Ancillary/Seating
54” wide
67% solution-dyed acrylic
33% solution-dyed polyester
PFOA-Free stain resistant

7CW01/466335-001	Fast
7CW03/466335-003	Beachcomb
7CW05/466335-005	Swift
7CW07/466335-007	Inkwell
7CW08/466335-008	Rubber

Passage - Maharam
Ancillary
54” wide
100% polyester

59P01/466614-001	Mirage
59P02/466614-002	Poolside
59P03/466614-003	Cascade
59P04/466614-004	Lacinato
59P05/466614-005	Overstory
59P06/466614-006	Celadon
59P07/466614-007	Echo
59P08/466614-008	Bentonite
59P09/466614-009	Buttercup
59P10/466614-010	Maple
59P11/466614-011	Blossom
59P12/466614-012	Cloudberry
59P13/466614-013	Contessa
59P14/466614-014	Claret
59P15/466614-015	Katana

Study - Maharam
Ancillary/Seating
54” wide
73% solution-dyed acrylic
27% solution-dyed polyester

ZSY01/466269-001	001
ZSY02/466269-002	002
ZSY03/466269-003	003
ZSY04/466269-004	004
ZSY05/466269-005	005

Tracery – Maharam
Ancillary
52” wide
34% solution-dyed nylon
26% wool
21% polyester
19% cotton
acrylic backing
PFOA-free stain resistant finish

ZT501/466372-001	Birch
ZT502/466372-002	Sterling
ZT503/466372-003	Flint
ZT504/466372-004	Indigo
ZT505/466372-005	Arctic
ZT506/466372-006	Kelp
ZT507/466372-007	Melon
ZT508/466372-008	Poppy
ZT509/466372-009	Copper
ZT510/466372-010	Papaya
ZT511/466372-011	Sepia

Price Category J

Fluted Silk – Maharam
Ancillary
54” wide
85% silk
8% cotton
7% acrylic

ZFK02/465982-002	Tarnish
ZFK05/465982-005	Calm
ZFK06/465982-006	Flaxen
ZFK10/465982-010	Noticed
ZFK11/465982-011	Moody
ZFK12/465982-012	Constant
ZFK13/465982-013	Seed
ZFK14/465982-014	Eternal
ZFK15/465982-015	Honor
ZFK17/465982-017	Cranach
ZFK20/465982-020	Discreet

Mikado – Maharam
Ancillary
54” wide
79% cotton
21% polyester

V1901/459330-001	Umber
V1902/459330-002	Orange
V1903/459330-003	Ultramarine
V1904/459330-004	Pink
V1905/459330-005	Sepia

Price category J continued on next page

- Maharam textiles are on assigned lead times A.
- Fabric numbers are listed as Herman Miller fabric number/Maharam fabric number.

Price Category J
continued

Trestle - Maharam	
Ancillary	
54” wide	
36% acrylic	
32% wool	
23% cotton	
9% polyester	
3WG01/466613-001	Loam
3WG02/466613-002	Rift
3WG03/466613-003	Fuse
3WG04/466613-004	Cumulus
3WG05/466613-005	Strand
3WG06/466613-006	Pomelo
3WG07/466613-007	Tawny
3WG08/466613-008	Sunstone
3WG09/466613-009	Kindling
3WG10/466613-010	Sidecar
3WG11/466613-011	Beak
3WG12/466613-012	Ficus
3WG13/466613-013	Hinge
3WG14/466613-014	Bluefish
3WG15/466613-015	Oblivion

Price Category K

Checker – Maharam	
Ancillary	
55” wide	
77% cotton	
23% polyester	
V1201/459830-001	Emerald Light/ Ivory
V1204/459830-004	Ultramarine/ Emerald
V1206/459830-007	Sienna Dark/ Khaki
V1207/459830-008	Black/White
V1209/459830-009	Ultramarine/ Turquoise
V1210/459830-010	Blue Gray/ Emerald
V1211/459830-011	Olive/Pink
V1212/459830-012	Magenta/ Orange
V1213/459830-013	Crimson/ Orange

Checker Split – Maharam	
Ancillary	
55” wide	
77% cotton	
23% polyester	
V1301/460290-01	Black/White

Double Triangles – Maharam	
Ancillary	
55” wide	
77% cotton	
23% polyester	
V1401/459840-001	Black/White

Facets – Maharam	
Ancillary	
55” wide	
77% cotton	
23% polyester	
V1501/459850-001	Black/White

Isa – Maharam	
Ancillary	
59” wide	
85% wool	
15% nylon	
VKZ01/466624-001	Bashful
VKZ02/466624-002	Median
VKZ03/466624-003	Observe
VKZ04/466624-004	Plains
VKZ05/466624-005	Drawn
VKZ06/466624-006	Connect
VKZ07/466624-007	Fennel
VKZ08/466624-008	Skyward
VKZ09/466624-009	Oceanic
VKZ10/466624-010	Neptune
VKZ11/466624-011	Sprint
VKZ12/466624-012	Ledge
VKZ13/466624-013	Surround
VKZ14/466624-014	Foretell
VKZ15/466624-015	Lory
VKZ16/466624-016	Dear
VKZ17/466624-017	Foxtrot
VKZ18/466624-018	Sincere
VKZ19/466624-019	Begonia

Optik – Maharam	
Ancillary	
55” wide	
76% cotton	
24% polyester	
ZQP01/459960-001	Sun Yellow/ Orange
ZQP06/459960-006	White/Black

Unisol – Maharam	
Ancillary	
55” wide	
61% rayon	
21% polyester	
18% cotton	
ZUN01/461160-001	Black/ White

Price Category L

Exaggerated Plaid – Maharam	
Ancillary	
59” wide	
100% wool	
ZEP01/466039-001	Glen
ZEP02/466039-002	Brae
ZEP03/466039-003	Firth

Geometri – Maharam	
Ancillary	
55” wide	
77% cotton	
23% polyester	
ZGM02/459970-002	Red/ Carmine
ZGM03/459970-003	Lilac/Blue
ZGM04/459970-004	White/ Black

Jacobs Coat – Maharam	
Ancillary	
54” wide	
92% wool	
8% nylon	
V1601/462270-001	Multicolored Bright *
V1602/462270-002	Multicolored Neutral

* Color available on Girard Color Wheel Ottoman.

Millerstripe – Maharam	
Ancillary	
54” wide	
92% wool	
8% rayon	
V1701/462250-001	Multicolored Bright
V1702/462250-002	Multicolored Neutral

Price category L continued on next page

- Maharam textiles are on assigned lead times A.
- Fabric numbers are listed as Herman Miller fabric number/Maharam fabric number.

Price Category L
continued

Minicheck - Maharam	
Seating	
55” wide	
78% cotton	
22% polyester	
PFOA-Free stain resistant finish	
ZMK01/466268-001	Black/ White

Monk’s Wool – Maharam	
Ancillary	
54” wide	
96% wool	
4% nylon	
ZMW01/457301-001	Tusk
ZMW03/457301-003	Slate
ZMW05/457301-005	Cherokee

Pebble Wool – Maharam	
Ancillary	
54” wide	
90% wool	
10% nylon	
ZPW01/457401-001	Birch
ZPW10/457401-010	Cottage
ZPW13/457401-013	Eggshell
ZPW14/457401-014	Whisper
ZPW15/457401-015	Ceramic
ZPW16/457401-016	Seamist
ZPW17/457401-017	Armory
ZPW18/457401-018	Glaze
ZPW19/457401-019	Cordial

Pebble Wool Multi – Maharam	
Ancillary	
54” wide	
97% wool	
3% nylon	
ZPM01/461200-001	Fawn
ZPM02/461200-002	Slate
ZPM05/461200-005	Moss
ZPM06/461200-006	Tabasco

Quatrefoil – Maharam	
Ancillary	
54” wide	
75% cotton	
25% nylon	
V2101/459350-001	Silver
V2102/459350-002	Pink
V2103/459350-003	Crimson
V2104/459350-004	Emerald
V2105/459350-005	Violet

Repeat Classic Stripe – Maharam	
Ancillary	
55” wide	
47% cotton	
27% rayon	
26% polyester	
ZRS01/462170-001	Inca
ZRS02/462170-002	Pistachio
ZRS03/462170-003	Poppy
ZRS04/462170-004	Cadet
ZRS05/462170-005	Peacock

Repeat Dot Ring – Maharam	
Ancillary	
55” wide	
75% cotton	
25% polyester	
ZRR01/462150-001	Gold
ZRR04/462150-004	Pink
ZRR05/462150-005	Coral
ZRR07/462150-007	Gold Reverse
ZRR10/462150-010	Pink Reverse
ZRR11/462150-011	Coral Reverse

Stripes - Maharam	
Ancillary	
56” wide	
92% wool	
8% nylon	
ZSP01/463980-001	001
ZSP02/463980-002	002
ZSP03/463980-003	003
ZSP04/463980-004	004
ZSP05/463980-005	005
ZSP06/463980-006	006
ZSP07/463980-007	007
ZSP08/463980-008	008
ZSP09/463980-009	009
ZSP10/463980-010	010

Toostripe – Maharam	
Ancillary	
54” wide	
92% wool	
8% nylon	
V2201/462260-001	Orange Dark/ Crimson Dark
V2202/462260-002	Black/ Raw Umber
V2203/462260-003	Ochre Dark/ Sienna

Price Category M

Fruit - Maharam	
Seating	
54” wide	
55% cotton	
32% nylon	
13% post-consumer recycled polyester	
PFOA-Free stain resistant finish	
Acrylic backing	
ZF201/466262-001	Opal
ZF202/466262-002	Lime
ZF203/466262-003	Olive
ZF204/466262-004	Sky
ZF207/466262-007	Russet

Names – Maharam	
Ancillary	
55” wide	
73% cotton	
27% polyester	
V1801/462510-001	Crimson On White
V1802/462510-002	Ultramarine On White
V1803/462510-003	Black On White

Price category M continued on next page

- Maharam textiles are on assigned lead times A.
- Fabric numbers are listed as Herman Miller fabric number/Maharam fabric number.

Price Category M
continued

Ottoman Stripe – Maharam	
Ancillary	
58” wide	
92% wool	
8% nylon	
ZQN01/466142-001	Brass
ZQN02/466142-002	Cocoa
ZQN03/466142-003	Dusk
ZQN04/466142-004	Pistachio
ZQN05/466142-005	Apricot

Pressed Plaid – Maharam	
Ancillary	
54” wide	
100% wool	
T1101/466181-001	001
T1102/466181-002	002
T1103/466181-003	003
T1104/466181-004	004
T1105/466181-005	005
T1106/466181-006	006

Wool Striae – Maharam	
Ancillary	
54” wide	
100% wool	
T1201/466184-001	001
T1202/466184-002	002
T1203/466184-003	003
T1204/466184-004	004
T1205/466184-005	005
T1206/466184-006	006
T1207/466184-007	007

Price Category N

Alpaca Epinglé - Maharam	
Ancillary	
55” wide	
100% alpaca	
ZAE01/465902-001	Vellum
ZAE02/465902-002	Slate
ZAE06/465902-006	Graphite
ZAE07/465902-007	Beignet

Alpaca Velvet - Maharam	
Ancillary	
54” wide	
100% alpaca	
ZAV01/465901-001	Alpine
ZAV06/465901-006	Charcoal
ZAV07/465901-007	Pewter
ZAV08/465901-008	Squash
ZAV09/465901-009	Wallaby
ZAV10/465901-010	Brunia

Bespoke Stripe - Maharam	
Ancillary	
56” wide	
100% wool	
ZBP01/463540-001	Navy
ZBP02/463540-002	Tobacco
ZBP03/463540-003	Chocolate
ZBP04/463540-004	Charcoal
ZBP05/463540-005	Black
ZBP06/463540-006	Pewter

Herringbone Stripe - Maharam	
Ancillary	
57” wide	
100% wool	
ZKP01/465945-001	Granite
ZKP02/465945-002	Espresso
ZKP03/465945-003	Graphite
ZKP04/465945-004	Indigo
ZKP05/465945-005	Raven

Point – Maharam	
Ancillary	
53” wide	
97% rayon	
3% nylon	
ZPT01/466090-001	Ivory and Ember
ZPT02/466090-002	Black and Coral
ZPT03/466090-003	Slate and Khaki
ZPT04/466090-004	Black and Cobalt
ZPT05/466090-005	Black and Khaki
ZPT06/466090-006	Slate and Mandarin
ZPT07/466090-007	Slate and Black
ZPT08/466090-008	Brick and Greige
ZPT09/466090-009	Gold and Black
ZPT10/466090-010	Greige and Peat
ZPT11/466090-011	Peat and Mandarin
ZPT12/466090-012	Crimson
ZPT13/466090-013	Mandarin
ZPT14/466090-014	Citrus
ZPT15/466090-015	Grass
ZPT16/466090-016	Cyan
ZPT17/466090-017	Cobalt

Wool Velvet - Maharam	
Ancillary	
54” wide	
100% wool	
ZWV01/466120-001	Plush
ZWV02/466120-002	Subdue
ZWV03/466120-003	Flagstone
ZWV04/466120-004	Nori
ZWV06/466120-006	Bridle
ZWV07/466120-007	Covert
ZWV08/466120-008	Gateway

Price Category O

Bavaria Stripe – Maharam	
Ancillary	
55” wide	
77% polyester	
23% cotton	
ZBS02/466161-002	Unique

- Maharam textiles are on assigned lead times. A
- Fabric numbers are listed as Herman Miller fabric number/Maharam fabric number.

Price Category P

Big Stripe – Maharam

Ancillary
55” wide
92% wool
8% nylon

ZBR01/466174-001	Peacock
ZBR02/466174-002	Spring
ZBR03/466174-003	Umber
ZBR04/466174-004	Poppy
ZBR05/466174-005	Cobalt

Epinglé Stripe - Maharam

Ancillary
50” wide
100% cotton

ZES01/466007-001	Caramel
ZES02/466007-002	Lead
ZES03/466007-003	Violet
ZES04/466007-004	Mahogany
ZES05/466007-005	Olive

Layers Garden – Maharam

Ancillary
52” wide
96% wool
3% nylon
1% polyester

ZLY01/465916-001	Ivy/Bronze
ZLY02/465916-002	Putty/ Turquoise
ZLY03/465916-003	Pewter/ White
ZLY04/465916-004	Chocolate/ Lilac
ZLY05/465916-005	Peat/Copper

Layers Park – Maharam

Ancillary
52” wide
95% wool
3% nylon
2% polyester

ZLP01/465918-001	Ash/Snow
ZLP02/465918-002	Mineral/Sky
ZLP03/465918-003	Poppy/ Melon
ZLP04/465918-004	Indigo/ White
ZLP05/465918-005	Earth/Cobalt

Layers Vineyard Large – Maharam

Ancillary
52” wide
95% wool
3% nylon
2% polyester

ZLV01/465921-001	Ivory/Onyx
ZLV02/465921-002	Slate/Azure
ZLV03/465921-003	Loden/Sky
ZLV04/465921-004	Taupe/ Crimson
ZLV05/465921-005	Black/ Mahogany

Layers Vineyard Small – Maharam

Ancillary
52” wide
92% wool
5% polyester
3% nylon

ZLS01/465920-001	Ochre/White
ZLS02/465920-002	Scarlet/ Peony
ZLS03/465920-003	Taupe/Violet
ZLS04/465920-004	Jade/ Turquoise
ZLS05/465920-005	Ginger/Rose

Mohair Supreme - Maharam

Ancillary
54” wide
100% mohair

ZMS02/451801-072	Stonehenge
ZMS06/451801-112	Slate *
ZMS07/451801-113	Rich Chocolate *
ZMS09/451801-126	Cayenne
ZMS10/451801-127	Cognac
ZMS12/451801-129	Peat *
ZMS15/451801-133	Abyss
ZMS16/451801-134	Intrigue
ZMS18/451801-136	Lupine *
ZMS28/451801-146	League
ZMS29/451801-147	Armory *
ZMS32/451801-150	Capiz
ZMS33/451801-151	Underneath
ZMS34/451801-152	Crescent
ZMS35/451801-153	National
ZMS36/451801-154	Rooftop
ZMS37/451801-155	Skewer
ZMS38/451801-156	Party
ZMS39/451801-157	Keepsake
ZMS40/451801-158	Travel
ZMS41/451801-159	Estate
ZMS42/451801-160	Grassland
ZMS43/451801-161	Limoncello
ZMS44/451801-162	Mango
ZMS45/451801-163	Doll
ZMS46/451801-164	Carousel
ZMS47/451801-165	Palette
ZMS48/451801-166	Brandy
ZMS49/451801-167	Aristocrat
ZMS50/451801-168	Soulmate
ZMS51/451801-169	Rosette
ZMS52/451801-170	Aviator
ZMS53/451801-171	Penny

* Colors available on Eames Lounge Chair and Ottoman.

Price Category Q

A Band Apart – Maharam

Ancillary
56” wide
75% polyester
25% cotton

ZAB01/466000-001	Unique

Brushed Camel – Maharam

Ancillary
58” wide
100% baby camel hair

ZBA01/465977-001	Albino
ZBA02/465977-002	Natural

Deconstructed Rose – Maharam

Ancillary
55” wide
65% polyester
32% cotton
3% rayon

ZDS01/466086-001	Golden
ZDS02/466086-002	Vivid
ZDS03/466086-003	Earthen

Massive Paisley – Maharam

Ancillary
57” wide
76% polyester
24% cotton

ZMV01/465915-001	Ash
ZMV03/465915-003	Cardinal
ZMV06/465915-006	Night

The Firm – Maharam

Ancillary
56” wide
75% polyester
25% cotton

ZTF03/465999-003	Unique

- Maharam textiles are on assigned lead times. A
- Fabric numbers are listed as Herman Miller fabric number/Maharam fabric number.

Price Category R

Borders – Maharam
Ancillary
53” wide
98% wool
2% polyester
ZBB01/466082-001 Natural
ZBB02/466082-002 Greige
ZBB03/466082-003 Charcoal
ZBB04/466082-004 Walnut

Stow Leather - Maharam
Ancillary
approx. 50 sq. ft. per hide
100% leather
protective top coat
ZSV01/700014-001 Opera
ZSV02/700014-002 Japonica
ZSV03/700014-003 Masquerade
ZSV04/700014-004 Laguna
ZSV05/700014-005 Jettison
ZSV06/700014-006 Razor
ZSV07/700014-007 Holiday
ZSV08/700014-008 Patchouli
ZSV09/700014-009 Macrame
ZSV10/700014-010 Grace
ZSV11/700014-011 Seraphim
ZSV12/700014-012 Ricotta
ZSV13/700014-013 Neroli
ZSV14/700014-014 Sultana
ZSV15/700014-015 Sundance
ZSV16/700014-016 Quince
ZSV17/700014-017 Babka
ZSV18/700014-018 Maitake
ZSV19/700014-019 Mercer
ZSV20/700014-020 Gaucho
ZSV21/700014-021 Chia
ZSV22/700014-022 Vanguard
ZSV23/700014-023 Zone
ZSV24/700014-024 Zeppelin

Stow Leather *continued*
ZSV25/700014-025 Clandestine
ZSV26/700014-026 Raven
ZSV27/700014-027 Cabana
ZSV28/700014-028 Rime
ZSV29/700014-029 Forsythia
ZSV30/700014-030 Panthera
ZSV31/700014-031 Dune
ZSV32/700014-032 Madera
ZSV33/700014-033 Russet
ZSV34/700014-034 Gala
ZSV35/700014-035 Heron

Price Category S

Bavaria – Maharam
Ancillary
55” wide
73% polyester
27% cotton
ZBV01/466162-001 Unique

Price Category T

All Grain Leather – Edelman	
Ancillary	
approx. 50 sq. ft. per hide	
100% full-grain Aniline-dye cowhide	
VB01/AG01	Pitch Brown
VB02/AG02	White
VB03/AG03	Cloud
VB04/AG04	Shadow
VB05/AG05	Black
VB06/AG06	Baked Bean
VB07/AG07	Mildew
VB08/AG08	Soot
VB09/AG09	Blue Jeans
VB10/AG10	Merlot
VB11/AG11	Nutmeg
VB12/AG12	Butter
VB13/AG13	Cherry
VB14/AG14	Burnt Orange
VB15/AG15	Whiskey
VB17/AG17	Raw Silk
VB18/AG18	Balsa
VB19/AG19	Naturale
VB21/AG21	Greige
VB22/AG27	Latte
VB23/AG28	Coral
VB24/AG29	Rose
VB25/AG30	Zinnia
VB26/AG31	Iris
VB27/AG32	Daffodil

Hours – Maharam
Ancillary
56” wide
95% wool
3% nylon
2% rayon
ZKR01/466092-001 Day
ZKR02/466092-002 Night

- Maharam textiles are on assigned lead times. A
- Fabric numbers are listed as Herman Miller fabric number/Maharam fabric number.

Price Category U

Layers Garden Double – Maharam	
Ancillary	
52” wide	
96% wool	
3% nylon	
1% polyester	
ZLD01/465917-001	Ash/ Quartz/ Grass
ZLD02/465917-002	Earth/ Chocolate/ Coral
ZLD03/465917-003	Black/ Navy/ Cobalt

Layers Park Double – Maharam	
Ancillary	
52” wide	
96% wool	
3% nylon	
1% polyester	
ZLB01/465919-001	Mineral/ Taupe/ Lemon
ZLB02/465919-002	Sienna/ Ginger/ Rose
ZLB03/465919-003	Black/ Peat/ Copper

Price Category V-W

No fabrics available at this time.

Price Category X

Eden – Maharam	
Ancillary	
56” wide	
83% polyester	
17% cotton	
ZED01/466258-001	001
ZED02/466258-002	002
ZED03/466258-003	003
ZED04/466258-004	004
ZED05/466258-005	005

Foliage – Maharam	
Ancillary	
56” wide	
75% polyester	
25% cotton	
ZFG02/466257-002	002
ZFG04/466257-004	004
ZFG05/466257-005	005

Price Category Y

Industry – Maharam	
Ancillary	
55” wide	
80% polyester	
20% cotton	
ZND01/466255-001	001

- Maharam textiles are on assigned lead times. A
- Fabric numbers are listed as Herman Miller fabric number/Maharam fabric number.

Price Category Z

Agency – Maharam	
Ancillary	
55” wide	
75% polyester	
25% cotton	
ZAG02/466001-002	002
ZAG04/466001-004	004
ZAG05/466001-005	005
ZAG06/466001-006	006
ZAG07/466001-007	007
ZAG08/466001-008	008

Price Category 10M

Pace Leather – Maharam	
Ancillary	
approx. 50 sq. ft. per hide	
100% leather	
ZPA01/700011-001	Whisper
ZPA02/700011-002	Shy
ZPA03/700011-003	Granite
ZPA04/700011-004	Misty
ZPA05/700011-005	Studio
ZPA06/700011-006	Throne
ZPA07/700011-007	Proper
ZPA08/700011-008	Huron
ZPA09/700011-009	Darkroom
ZPA10/700011-010	Bark
ZPA11/700011-011	Raspberry
ZPA12/700011-012	Sangria
ZPA13/700011-013	Admiral
ZPA14/700011-014	Juniper
ZPA15/700011-015	Regal
ZPA16/700011-016	Vapor
ZPA17/700011-017	Valley
ZPA18/700011-018	Bushel
ZPA19/700011-019	Heirloom
ZPA20/700011-020	Palomino
ZPA21/700011-021	Bamboo
ZPA22/700011-022	Saffron
ZPA23/700011-023	Tearose
ZPA24/700011-024	Canyon
ZPA25/700011-025	Bistro
ZPA26/700011-026	Toffee
ZPA27/700011-027	Rodeo
ZPA28/700011-028	Mudslide
ZPA29/700011-029	Greige
ZPA30/700011-030	Reflection
ZPA31/700011-031	Pure
ZPA32/700011-032	Desert
ZPA33/700011-033	Griffin
ZPA34/700011-034	Urbane
ZPA35/700011-035	Woodrose

- Maharam textiles are on assigned lead times. A
- Fabric numbers are listed as Herman Miller fabric number/Maharam fabric number.

For more information about our products and services or to see a list of dealers, please visit us at HermanMiller.com or call (800) 851 1196.

© 2025 Herman Miller, Inc., Zeeland, Michigan

Distribution Rights

Working together since 1956, Herman Miller and Vitra are the authentic sources of designs by Charles and Ray Eames, Alexander Girard, and George Nelson. All the designs shown in this book are protected by law. Herman Miller has obtained all rights to make and sell these designs. Also, Herman Miller holds exclusive worldwide manufacturing and distribution rights for these products with the following exceptions:

Charles and Ray Eames, George Nelson, and Alexander Girard—Worldwide distribution rights for furniture in all areas except Europe and the Middle East. For those areas, please contact Vitra.

Isamu Noguchi—Worldwide distribution rights for the Noguchi Rudder Table. Distribution rights for the Noguchi Table in North America and Central America only. For all other areas, please contact Vitra.

Magis—Exclusive distribution rights in the US and Canada. For all other areas, please contact Magis.

® HermanMiller, ●, 3D Intelligent, 8Z Pellicle, AO, Action Office, Aeron, Aside, Bubble Lamps, Canvas Office Landscape, Caper, Celle, Cosm, Co/Struc, Daisyone, Distil, Eames, Eco-Dematerialized, Embody, Envelop, Ethospace, Exclave, Fine-Tune, FlexFront, Flo, Formcoat, Formwork, Ground Cloth, Intent, Kinemat, Layout Studio, Lino, Live Unframed, Living Office, Maharam, Meridian, Mirra, Motia, Nelson, Pari, Pellicle, Perspectives, Plex, PostureFit, PostureFit SL, Public Office Landscape, Sayl, Setu, Striad, Tu, Ubi, Verus, Wishbone, Y-Tower and Zeph are among the registered trademarks of Herman Miller, Inc., and its owned subsidiaries.

™ About Face, AireWeave, Airia, Ambit, Asari Chair by HermanMiller, Backfit, Bubbletack, Burdick Group, Butterfly Back, Canvas Vista, Cellular Suspension, Commend, Compass, Connect, DOT, Duracare, Durawrap, EnhancedAccess, Everywhere, Flex-Edge, Flute, Harmonic, Headway, Herman Miller Select, Hopsak 2, Iota, Keyless Entry, Latitude, Logic Mini, Logic Power Access Solutions, Lyris, Lyris 2, Made-to-Measure Storage, Mora, Multiscrim, Nevi, OE1, OE1 Workspace Collection, Overlay, Pixelated Support, Pronta, Renew, Sense, Soft Pad, Stackable, Stackable Storage, Swoop, Thrive, Tone, TriFlex, Twist and Wireframe are among the trademarks of Herman Miller, Inc., and its owned subsidiaries.

SM Herman Miller Options is among the service marks of Herman Miller, Inc.

AAP™ is a trademark of Extron Electronics.

Alexander Girard® is a registered trademark of The Alexander Girard Estate.

Chemsurf® is a registered trademark of Wilsonart International.

Corian® is a registered trademark of E. I. du Pont de Nemours and Company Corporation.

Crypton® is a registered trademark of Crypton, Inc.

DACRON® is a registered trademark of INVISTA S.a r.l.

Danzer® is a registered trademark of Danzer Holding AG.

Decora® is a registered trademark of Leviton Manufacturing Co., Inc.

Edelman® Leather is a registered trademark of Edelman Leather, Inc.

Extron® is a registered trademark of RGB Systems, Inc.

FENIX NTM® is a registered trademark of Arpa Industriale S.p.A.

FLEXNET™ is a trademark of Milliken & Company.

Floor Saver Glide® is a registered trademark of Carpin Manufacturing, Inc.

Forest Stewardship Council® is a registered trademark of the Forest Stewardship Council A.C. (FSC). We are FSC® certified (FSC® C102895).

FSC® is a registered trademark of the Forest Stewardship Council A.C. (FSC).

Geiger® is a registered trademark, and Bumper™, Saiba™, and Ward Bennett™ are trademarks, of Geiger International.

Hang-It-All® is a registered trademark of Lucia Eames Demetrios, d.b.a. Eames Office.

Holophane® is a registered trademark of Holophane.

Ingeo™ is a trademark of Cargill Dow LLC.

iPad® and Mac mini® are registered trademarks of Apple Inc.

Leviton® is a registered trademark of Leviton Manufacturing Co., Inc.

LifeSize® is a registered trademark of LifeSize Communications, Inc.

Lisocore® is a registered trademark of Pyrus Panels GmbH.

Logitech G® is a registered trademark of Logitech International S.A.

Magis®, Bombo®, and Me Too® are registered trademarks of Magis S.p.A.

MicrobeCare™ is a trademark of Parasol Medical LLC.

Microsoft® and Natural® Keyboard are registered trademarks of Microsoft Corporation.

Noguchi® and the Noguchi table configuration (trade dress) are registered trademarks, and Rudder Table™ is a trademark, of The Isamu Noguchi Foundation and Garden Museum.

Place Textiles® is a registered trademark of Place Textiles.

Sunbrella® is a registered trademark of Glen Raven, Inc.

SuperSeat™ is a trademark of Dahti Seating, a division of ITW.

Valor™ is among the trademarks owned by Nemschoff, Inc.