Nessen

NT471 Solid brass and abaca weave, “Jaya” 26” table lamp

NT471 "Jaya" abaca weave table lamp
Wooding Design design

Solid brass base and metal accents.
Natural weave material made from Abaca plant fibers.
7" square base, 3" square column.
White perforated top disc for downlight.
On/Off switch on socket controls one lamp.
150W max. UL/CUL listed.

Standard Metal Finishes: Polished Brass, Brushed Brass, Polished Chrome, Satin Chrome, Polished Nickel, Satin Nickel (shown), Antique Brass
Standard Weave Finishes: Sand, Mist Green (shown), Blue
Shades: White Linen (shown), White Semi-Gloss Paper, Black Semi-Gloss Paper
Shade Dimensions: B 16", T 15", H 8 1/2"

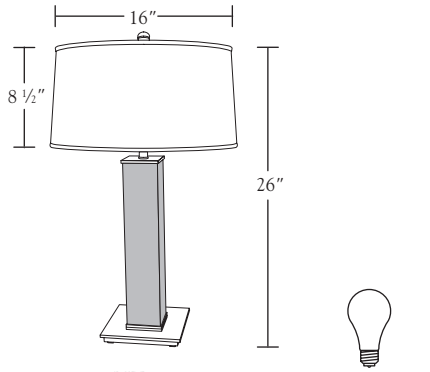

NT471

MEDIUM BASE

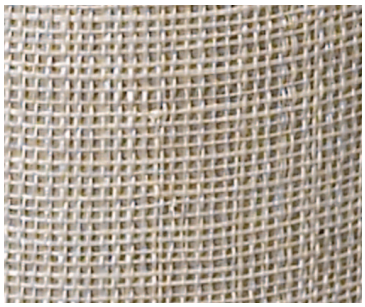
Sand

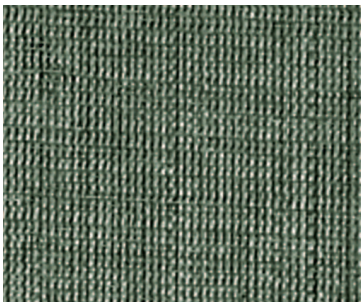
Mist Green

Blue

For modifications and special contract orders,
see price list or contact your Nessen representative.

Nessen
a Genlyte company
420 Railroad Way, P.O. Box 187, Mamaroneck, NY 10543 Tel. 914 698 7799 Fax 914 698 5577 www.nessenlighting.com