Prices effective January 6, 2020

Published February 2020

Layout Studio®

Introduction	**page 2**
Layout Studio®	**3**
Performance Rail	
Infrastructure	5
Power & Wire Management	29
Surfaces	46
Screens	54
Storage	72
No Rail	
Infrastructure	85
Power & Wire Management	109
Surfaces	125
Screens	143
Hardware	177
Indices	**181**
By Name	181
By Number	183
Appendices	
20-Day or Less/Assigned Lead-Time Order Information	
Stain-to-Match Program	
Customer's Own Material Order Information-Workspaces	
Proprietary Textiles Application Chart-Workspaces	
Proprietary Textile Colors-Workspaces	

For the latest materials information, refer to the Materials pages on HermanMiller.com.

Introduction

A Note on the Organization of This Book

There are a few signals that will help you understand the organization of this book. Once you know them, you should be able to find your way around easily.

Like a newspaper, this book is formatted with columns of text and illustrations that run vertically.

Information wraps from one column to the next and continues for as many pages as it needs to.

Black bars are clues.

A black bar at the top of a page signals the start of information about a product.

This information is divided into two sections, each signaled by a black bar. Product Information includes a description, additional notes, and dimensional drawings. Specification Information, which always begins at the top of a column, includes a series of steps. Each step represents a decision you need to make in order to complete your product number. Steps must be followed sequentially. The number of pages needed to complete information on a product varies; some will be complete in one page; others may fill three or four pages. Just continue going through the steps until you run into the next product, signaled by the black bar at the top of the page.

Black tabs running along the outside edge of the page help you locate what section you are in or what section you want to go to. You can thumb forwards or backwards to find a section; tabs and text appear on both sides of the page.

The additional pages in the back of the book include the appendices and indices. They are signaled by a long black bar running along the outside edge of the page.

The index is presented two ways.

The first index is in alphabetical order by product name. It can be helpful if you are new to the products and numbering scheme or if you are looking for a type of product, such as work chair or round table.
The second index is by product number. It lists, in alphanumeric order, the base product number, typically a five-digit number.

General Information

This book is effective January 6, 2020, subject to change without notice. Products may be purchased from authorized Herman Miller dealers who will quote prices upon request. For more information about our products and services or to see a list of dealers, visit www.HermanMiller.com.

All prices are list prices. Additional services, such as planning services, design, storage, and installation, are not included and must be added to these prices when the additional services are requested.

Illustrations, specifications, and prices are based on the latest information at the time of publication. The right is reserved to make changes at any time without notice in prices, fabrics, finishes, materials, specifications, and models, and also to discontinue models and finishes.

Dimensions shown in the drawings are engineering drawing dimensions rounded up to the nearest 1/8". Product is shipped set up or knocked down. Products that include "Shipped knocked down" in the description require some assembly. If this statement does not appear in the description, the product is shipped assembled.

Service problems are normally handled by a Herman Miller authorized dealer. Where this cannot be accomplished on a local level, service problems should be referred to the Customer Care Representative for your region, Herman Miller, Inc., Zeeland, Michigan 49464.

20-Day or Less/Assigned Lead-Time Shipments

All products and options in this price book not designated by an Assigned Program icon A will ship in **20 business days or less** after being acknowledged by Herman Miller.

Products and options designated by an A are on the assigned lead-time program and may ship in 20 days, less than 20 days, or more than 20 days from order acknowledgement.

Performance Rail

No Rail

Engage Leg, Desk End, Single, Performance Rail

GNLFEL
GNLFER

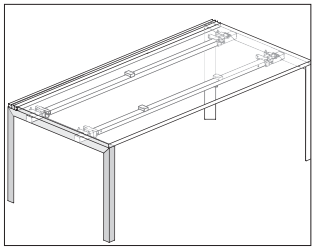

Product Information

Description

This single desk end leg provides support for an individual table or the end of a single-sided bench when using a performance rail. This fixed-height leg provides 1 3/4″ of leveling adjustment.

Notes

Size of leg must match depth of surface being supported.

Dimensions

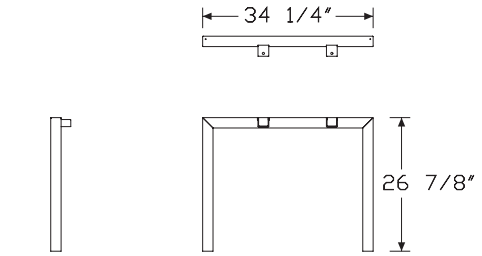

Engage Leg - Left

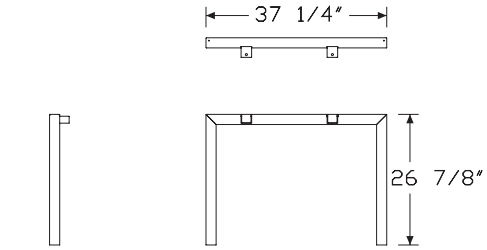

Engage Leg - Right

Specification Information

Step 1.

GN A

Step 2. Leg

LF fixed height A

Step 3. Application

EL.R left hand, for use with performance rail A
ER.R right hand, for use with performance rail A

Step 4. Size

24 24″ deep A
30 30″ deep A

Prices for Steps 1-4.

GNLFEL.R	**24**	$282
	30	$286
GNLFER.R	**24**	$282
	30	$286

Step 5. Leg Finish

Metallic Paint

MS	metallic silver A	+$0

Sand Texture Paint

91	white A	+$0
98	studio white A	+$0
BK	black A	+$0
G1	graphite A	+$0

Engage Leg, Desk End, Double GNLFEN

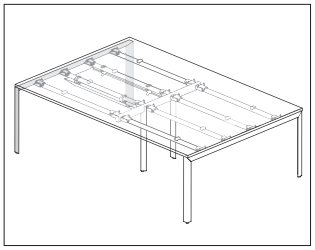

Product Information

Description

The double desk end leg provides support at either end of a back-to-back bench application, or a project table. This fixed height leg provides 1¾″ of leveling adjustment.

Notes

Size of the leg must match the combined depth of the 2 primary surfaces or 1 project table surface being supported.

Dimensions

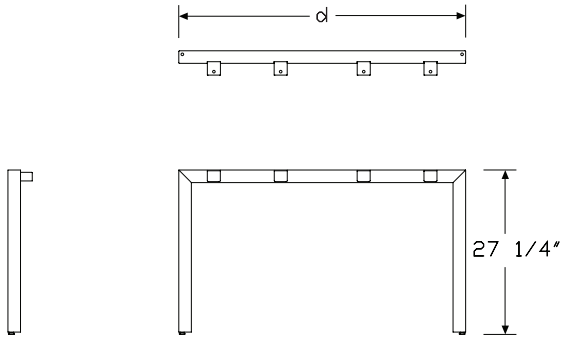

Specification Information

Step 1.

GN

Step 2. Leg Type

LF	fixed height

Step 3. Application

EN.	desk end double

Step 4. Depth

48	48″ deep
60	60″ deep
72	72″ deep

Prices for Steps 1-4.

GNLFEN.	**48**	$374
	60	$397
	72	$420

Step 5. Leg Finish

Metallic Paint

MS	metallic silver	+$0

Sand Texture Paint

91	white	+$0
98	studio white	+$0
BK	black	+$0
G1	graphite	+$0

Engage Leg, Intermediate Desk, Performance Rail GNLFSN

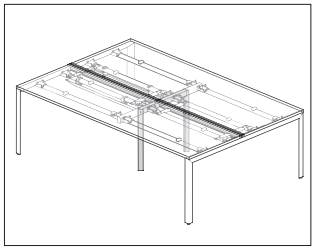

Product Information

Description

This intermediate desk leg provides support within a single-sided or back-to-back bench application when using a performance rail. This fixed-height leg provides 1¾″ of leveling adjustment.

Notes

Size of leg must match combined depth of surfaces being supported.

Dimensions

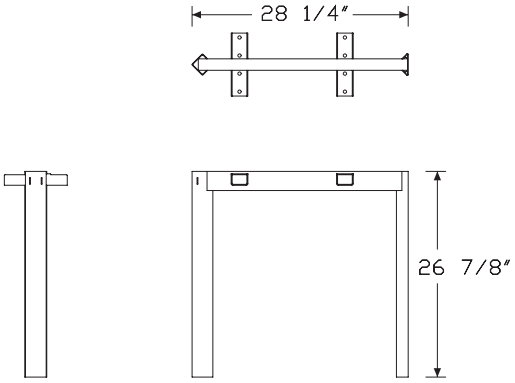

Specification Information

Step 1.

GN A

Step 2. Leg

LF fixed height A

Step 3. Application

SN.R intermediate desk with performance rail A

Step 4. Size

24 24″ deep A
30 30″ deep A
48 48″ deep A
60 60″ deep A

Prices for Steps 1-4.

GNLFSN.R	**24**	$306
	30	$311
	48	$392
	60	$408

Step 5. Leg Finish

Metallic Paint

MS	metallic silver A	+$0

Sand Texture Paint

91	white A	+$0
98	studio white A	+$0
BK	black A	+$0
G1	graphite A	+$0

Engage Leg, Asymmetrical Desk End, Double

GNLFAL
GNLFAR

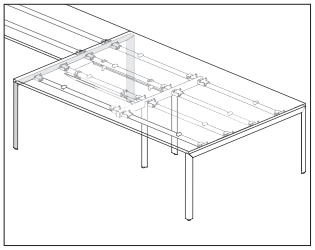

Product Information

Description

This leg supports an asymmetrical application, with a back-to-back application on 1 side of the leg and a single surface on the other side of the leg. It is fixed height, and provides 1¾″ of leveling adjustment.

Notes

Size of the leg must match the depth of the surfaces being supported.

Dimensions

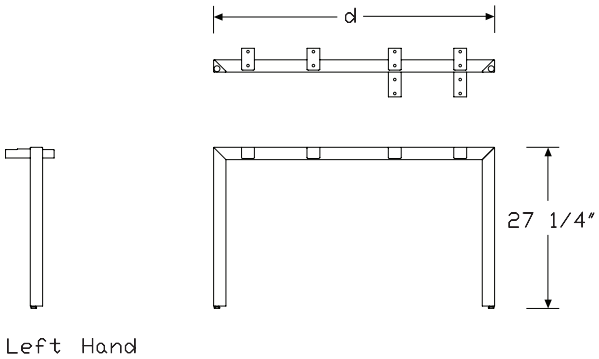

Left Hand

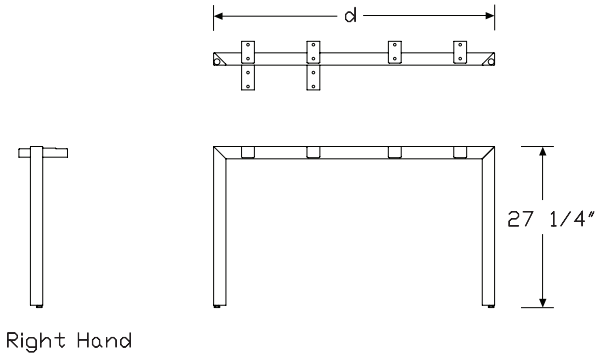

Right Hand

Specification Information

Step 1.

GN

Step 2. Leg Type

LF	fixed height

Step 3. Application

AL.	left hand
AR.	right hand

Step 4. Depth

48	48″ deep
60	60″ deep

Prices for Steps 1-4.

GNLFAL.	**48**	$400
	60	$424
GNLFAR.	**48**	$400
	60	$424

Step 5. Leg Finish

Metallic Paint

MS	metallic silver	+$0

Sand Texture Paint

91	white	+$0
98	studio white	+$0
BK	black	+$0
G1	graphite	+$0

Engage Leg, Desk End, Double, Meeting End

GNLFPN

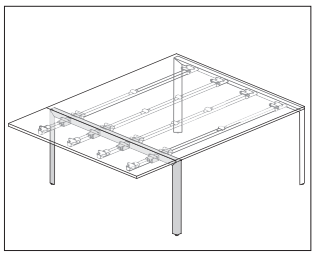

Product Information

Description

This leg supports the use of meeting end beams and surface at the end of a back-to-back bench.

Notes

Size of leg must match the combined depth of the 2 primary surfaces or 1 project table surface being supported.

Order meeting end beams (GNBM.) and surface (GNTDx.) separately.

Dimensions

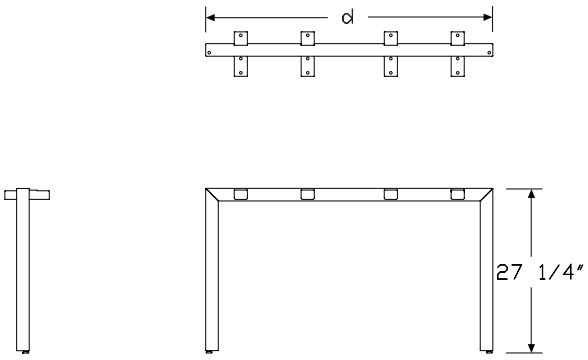

Specification Information

Step 1.

GN

Step 2. Leg Type

LF	fixed height

Step 3. Application

PN.	meeting end

Step 4. Depth

48	48" deep
60	60" deep
72	72" deep

Prices for Steps 1-4.

GNLFPN.	**48**	$390
	60	$435
	72	$468

Step 5. Leg Finish

Metallic Paint

MS	metallic silver	+$0

Sand Texture Paint

91	white	+$0
98	studio white	+$0
BK	black	+$0
G1	graphite	+$0

Engage Leg, Back-to-Back Bracing Leg, Performance Rail GNLFBN

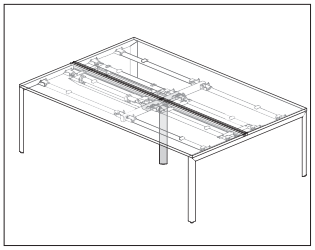

Product Information

Description

This seated-height stabilizer leg kit provides support within a back-to-back bench application with performance rail where no intermediate leg is being used. This fixed-height leg provides 1 3/4" of leveling adjustment.

Notes

This leg is only required in a back-to-back application with performance rail when no intermediate leg is being used.

Dimensions

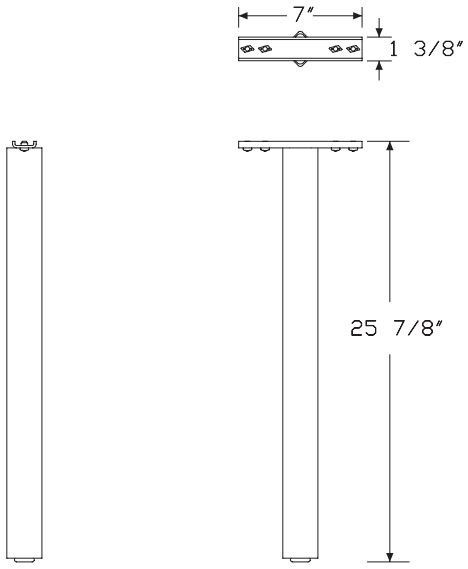

Specification Information

Step 1.

GN A

Step 2. Leg

LF fixed height A

Step 3. Application

BN.R bracing leg for use with performance rail A

Prices for Steps 1-3.

GNLFBN.R	$276

Step 4. Leg Finish

Metallic Paint

MS	metallic silver A	+$0

Sand Texture Paint

91	white A	+$0
98	studio white A	+$0
BK	black A	+$0
G1	graphite A	+$0

Engage Leg, Standing End, Double — GNLSEN

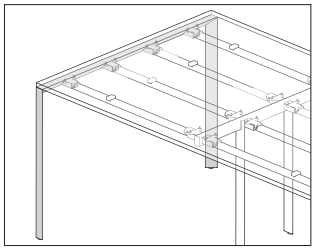

Product Information

Description

This double standing height end leg provides support at either end of a back-to-back bench or project table application. This fixed height leg provides 1 3/4″ of leveling adjustment.

Notes

Size of leg must match the combined depth of the 2 primary surfaces or 1 project table surface being supported.

Dimensions

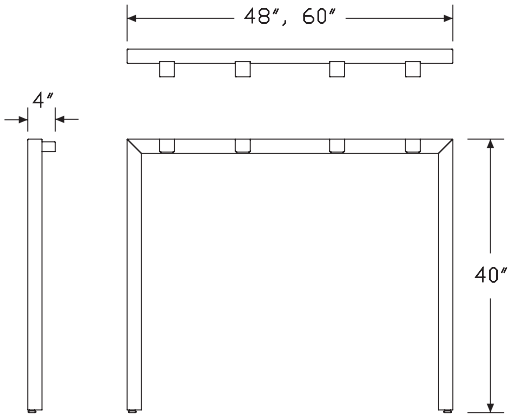

Specification Information

Step 1.

GN A

Step 2. Leg

LS standing height A

Step 3. Application

EN. desk end double A

Step 4. Size

48 48″ deep A
60 60″ deep A

Prices for Steps 1-4.

GNLSEN.	**48**	$543
	60	$577

Step 5. Leg Finish

Metallic Paint

MS	metallic silver A	+$0

Sand Texture Paint

91	white A	+$0
98	studio white A	+$0
BK	black A	+$0
G1	graphite A	+$0

Engage Leg, Intermediate Standing — GNLSSN

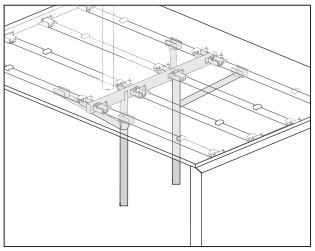

Product Information

Description

This intermediate standing height leg provides support in a back-to-back bench or project table application. This fixed height leg provides 1 3/4″ of leveling adjustment. Leg includes all bracing, structural supports, and hardware required for a standing height application.

Notes

Size of leg must match the combined depth of the 2 primary surfaces or 1 project table surface being supported.

Dimensions

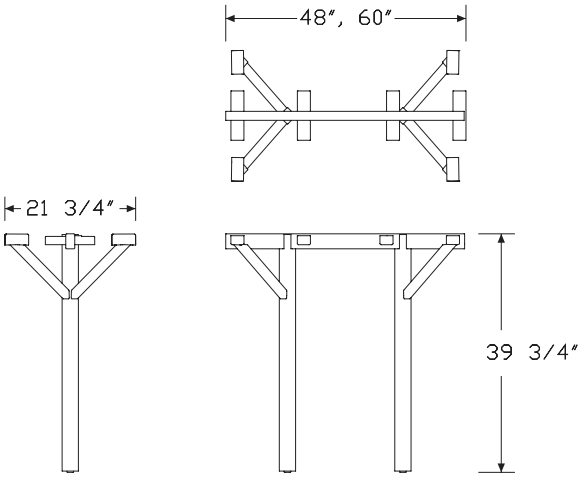

Specification Information

Step 1.

GN A

Step 2. Leg

LS standing height A

Step 3. Application

SN. intermediate A

Step 4. Size

48 48″ deep A
60 60″ deep A

Prices for Steps 1-4.

GNLSSN.	**48**	$892
	60	$925

Step 5. Leg Finish

Metallic Paint

MS	metallic silver A	+$0

Sand Texture Paint

91	white A	+$0
98	studio white A	+$0
BK	black A	+$0
G1	graphite A	+$0

Engage Leg, Standing Back-to-Back Bracing Leg

GNLSBN

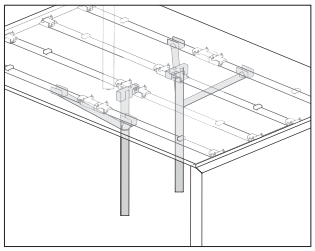

Product Information

Description

This standing height stabilizer leg kit provides support in a back-to-back bench or project table application where no intermediate leg is being used. This fixed height leg provides 1 3/4" of leveling adjustment. Leg includes all bracing, structural supports, and hardware required for a standing height application.

Notes

This leg is only used in standing height applications that have 1 beam width spanning between 2 end legs, or between 1 end leg and 1 end-of-run storage unit that supports the surface.

This leg can only be used with 42"-wide or wider beams.

Dimensions

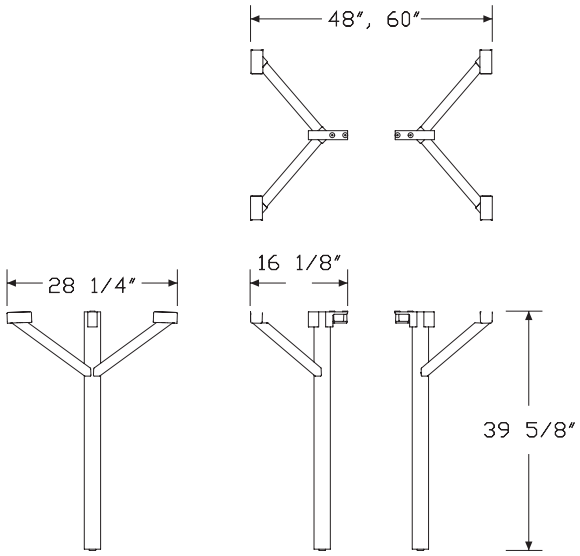

Specification Information

Step 1.

GN A

Step 2. Leg

LS standing height A

Step 3. Application

BN. bracing leg A

Step 4. Depth

48 48" deep application A

60 60" deep application A

Prices for Steps 1-4.

GNLSBN.	**48**	$834
	60	$850

Step 5. Leg Finish

Metallic Paint

MS	metallic silver A	+$0

Sand Texture Paint

91	white A	+$0
98	studio white A	+$0
BK	black A	+$0
G1	graphite A	+$0

Closed Leg, Desk End, Single, Performance Rail

GNCFEL
GNCFER

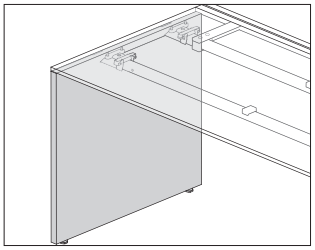

Product Information

Description

This single desk end leg provides support for an individual table or the end of a single-sided bench or return when using a performance rail. It has a laminate top and thermoplastic edge, laminate top with a thermoplastic backed plywood edge, or veneer top and edge. This fixed height leg provides 1 3/4″ of leveling adjustment.

Notes

Size of leg must match depth of surface being supported.

Top of leg will be under the attached surface.

Grain/pattern direction is vertical on veneer, wood grain laminates, and directional laminates.

Dimensions

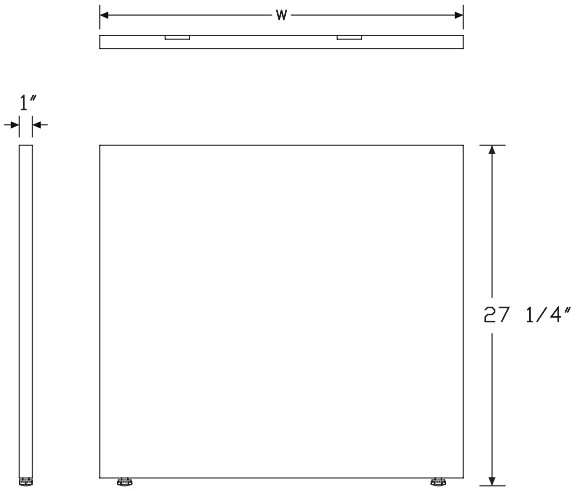

Specification Information

Step 1.

GN A

Step 2. Leg Type

CF fixed height A

Step 3. Application

EL.R left hand, for use with performance rail A

ER.R right hand, for use with performance rail A

Step 4. Size

24 24″ deep A

30 30″ deep A

Step 5. Material

L laminate top/thermoplastic edge A

U laminate top/universal edge A

W veneer A

Prices for Steps 1-5.

		L	U	W
GNCFEL.R	**24**	$382	382	763
	30	$400	400	799
GNCFER.R	**24**	$382	382	763
	30	$400	400	799

Closed Leg, Desk End, Single, Performance Rail *continued*

Step 6. Leg Finish

For laminate top/thermoplastic edge (L) or laminate top/universal edge (U)

76	light brown walnut A	+$0
8Q	folkstone grey A	+$0
91	white A	+$0
98	studio white A	+$0
CL	cool grey neutral A	+$0
HF	inner tone light A	+$0
HM	natural maple A	+$0
HP	light anigre A	+$0
HT	inner tone A	+$0
HX	aged cherry A	+$0
HY	walnut on cherry A	+$0
LA	light ash A	+$0
LBA	clear on ash A	+$0
LBR	phantom ecru A	+$0
LBS	phantom cocoa A	+$0
LBU	medium matte walnut A	+$0
LBV	warm grey teak A	+$0
LBB	oak on ash A	+$0
LBC	walnut on ash A	+$0
LBD	dark brown walnut A	+$0
LBF	neutral twill A	+$0
LBG	sarum twill A	+$0
LBH	earthen twill A	+$0
LBJ	graphite twill A	+$0
LBM	crisp linen A	+$0
LBN	classic linen A	+$0
LBP	casual linen A	+$0
LBQ	white twill A	+$0
LT	light tone A	+$0
LU	soft white A	+$0
MT	medium tone A	+$0
WL	sandstone A	+$0
WN	warm grey neutral A	+$0

Wood Veneer

For veneer (W)

2U	light brown walnut A	+$55
40	dark brown walnut A	+$55
ET	clear on ash A	+$55
EU	oak on ash A	+$55
EV	walnut on ash A	+$55

Step 7. Edge Finish

For laminate top/thermoplastic edge (L)

76	light brown walnut A	+$0
8Q	folkstone grey A	+$0
8Z	neutral grey A	+$0
91	white A	+$0
98	studio white A	+$0
BU	black umber A	+$0
CL	cool grey neutral A	+$0
HF	inner tone light A	+$0
HM	natural maple A	+$0
HP	light anigre A	+$0
HT	inner tone A	+$0
HX	aged cherry A	+$0
HY	walnut on cherry A	+$0
JB	millwork cherry A	+$0
LA	light ash A	+$0
LBA	clear on ash A	+$0
LBR	phantom ecru A	+$0
LBS	phantom cocoa A	+$0
LBU	medium matte walnut A	+$0
LBV	warm grey teak A	+$0
LBB	oak on ash A	+$0
LBC	walnut on ash A	+$0
LBD	dark brown walnut A	+$0
LBF	neutral twill A	+$0
LBG	sarum twill A	+$0
LBH	earthen twill A	+$0
LBJ	graphite twill A	+$0
LBK	pewter mesh A	+$0
LBL	steel mesh A	+$0
LBM	crisp linen A	+$0
LBN	classic linen A	+$0
LBP	casual linen A	+$0
LBQ	white twill A	+$0
LU	soft white A	+$0
MT	medium tone A	+$0
WL	sandstone A	+$0
WN	warm grey neutral A	+$0

For laminate top/universal edge (U)

PLY	plywood edge A	+$50

Closed Leg, Desk End, Single, Performance Rail *continued*

Step 8. Bracket Finish

Finish		
91	white A	+$0
98	studio white A	+$0
BK	black A	+$0
G1	graphite A	+$0
MS	metallic silver A	+$0

Closed Leg, Desk End, Double GNCFEN

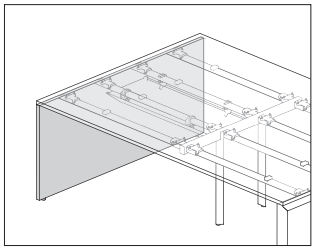

Product Information

Description

This double desk end leg provides support at either end of a back-to-back bench application or project table. It has a laminate top and thermoplastic edge, laminate top with a thermoplastic backed plywood edge, or veneer top and edge. This fixed height leg provides 1¾″ of leveling adjustment.

Notes

Size of leg must match the combined depth of the 2 primary surfaces or 1 project table surface being supported.

Top of leg will be under the attached surface.

Grain/pattern direction is vertical on veneer, wood grain laminates, and directional laminates.

Dimensions

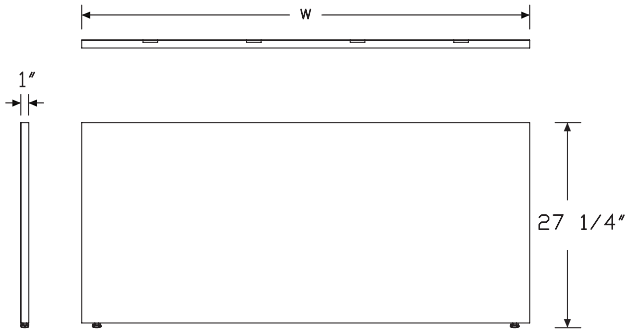

Specification Information

Step 1.

GN A

Step 2. Leg Type

CF fixed height A

Step 3. Application

EN. desk end double A

Step 4. Size

48 48″ deep A

60 60″ deep A

Step 5. Material

L laminate top/thermoplastic edge A

U laminate top/universal edge A

W veneer A

Prices for Steps 1-5.

		L	U	W
GNCFEN.	**48**	$586	586	1169
	60	$674	674	1347

Closed Leg, Desk End, Double

continued

Step 6. Leg Finish

For laminate top/thermoplastic edge (L) or laminate top/universal edge (U)

76	light brown walnut A	+$0
8Q	folkstone grey A	+$0
91	white A	+$0
98	studio white A	+$0
CL	cool grey neutral A	+$0
HF	inner tone light A	+$0
HM	natural maple A	+$0
HP	light anigre A	+$0
HT	inner tone A	+$0
HX	aged cherry A	+$0
HY	walnut on cherry A	+$0
LA	light ash A	+$0
LBA	clear on ash A	+$0
LBR	phantom ecru A	+$0
LBS	phantom cocoa A	+$0
LBU	medium matte walnut A	+$0
LBV	warm grey teak A	+$0
LBB	oak on ash A	+$0
LBC	walnut on ash A	+$0
LBD	dark brown walnut A	+$0
LBF	neutral twill A	+$0
LBG	sarum twill A	+$0
LBH	earthen twill A	+$0
LBJ	graphite twill A	+$0
LBM	crisp linen A	+$0
LBN	classic linen A	+$0
LBP	casual linen A	+$0
LBQ	white twill A	+$0
LT	light tone A	+$0
LU	soft white A	+$0
MT	medium tone A	+$0
WL	sandstone A	+$0
WN	warm grey neutral A	+$0

Wood Veneer

For veneer (W)

2U	light brown walnut A	+$55
40	dark brown walnut A	+$55
ET	clear on ash A	+$55
EU	oak on ash A	+$55
EV	walnut on ash A	+$55

Step 7. Edge Finish

For laminate top/thermoplastic edge (L)

76	light brown walnut A	+$0
8Q	folkstone grey A	+$0
8Z	neutral grey A	+$0
91	white A	+$0
98	studio white A	+$0
BU	black umber A	+$0
CL	cool grey neutral A	+$0
HF	inner tone light A	+$0
HM	natural maple A	+$0
HP	light anigre A	+$0
HT	inner tone A	+$0
HX	aged cherry A	+$0
HY	walnut on cherry A	+$0
JB	millwork cherry A	+$0
LA	light ash A	+$0
LBA	clear on ash A	+$0
LBR	phantom ecru A	+$0
LBS	phantom cocoa A	+$0
LBU	medium matte walnut A	+$0
LBV	warm grey teak A	+$0
LBB	oak on ash A	+$0
LBC	walnut on ash A	+$0
LBD	dark brown walnut A	+$0
LBF	neutral twill A	+$0
LBG	sarum twill A	+$0
LBH	earthen twill A	+$0
LBJ	graphite twill A	+$0
LBK	pewter mesh A	+$0
LBL	steel mesh A	+$0
LBM	crisp linen A	+$0
LBN	classic linen A	+$0
LBP	casual linen A	+$0
LBQ	white twill A	+$0
LU	soft white A	+$0
MT	medium tone A	+$0
WL	sandstone A	+$0
WN	warm grey neutral A	+$0

For laminate top/universal edge (U)

PLY	plywood edge A	+$50

Closed Leg, Desk End, Double

continued

Step 8. Bracket Finish		
Finish		
91	white A	+$0
98	studio white A	+$0
BK	black A	+$0
G1	graphite A	+$0
MS	metallic silver A	+$0

Closed Leg, Standing End, Double GNCSEN

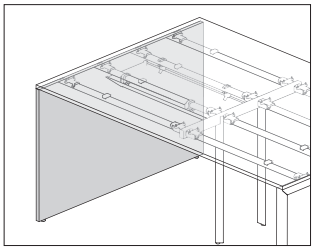

Product Information

Description

This double standing height end leg provides support at either end of a back-to-back bench application or project table. It has a laminate top and thermoplastic edge, laminate top with a thermoplastic backed plywood edge, or veneer top and edge. This fixed height leg provides 1¾″ of leveling adjustment.

Notes

Size of leg must match the combined depth of the 2 primary surfaces or 1 project table surface being supported.

Top of leg will be under the attached surface.

Grain/pattern direction is vertical on veneer, wood grain laminates, and directional laminates.

Dimensions

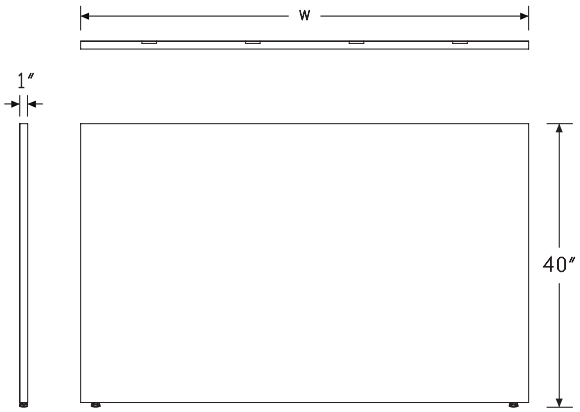

Specification Information

Step 1.

GN A

Step 2. Leg Type

CS standing height A

Step 3. Application

EN. desk end double A

Step 4. Size

48 48″ deep A

60 60″ deep A

Step 5. Material

L laminate top/thermoplastic edge A

U laminate top/universal edge A

W veneer A

Prices for Steps 1-5.

		L	U	W
GNCSEN.	**48**	$756	756	1513
	60	$875	875	1748

Closed Leg, Standing End, Double

continued

Step 6. Leg Finish

For laminate top/thermoplastic edge (L) or laminate top/universal edge (U)

76	light brown walnut A	+$0
8Q	folkstone grey A	+$0
91	white A	+$0
98	studio white A	+$0
CL	cool grey neutral A	+$0
HF	inner tone light A	+$0
HM	natural maple A	+$0
HP	light anigre A	+$0
HT	inner tone A	+$0
HX	aged cherry A	+$0
HY	walnut on cherry A	+$0
LA	light ash A	+$0
LBA	clear on ash A	+$0
LBR	phantom ecru A	+$0
LBS	phantom cocoa A	+$0
LBU	medium matte walnut A	+$0
LBV	warm grey teak A	+$0
LBB	oak on ash A	+$0
LBC	walnut on ash A	+$0
LBD	dark brown walnut A	+$0
LBF	neutral twill A	+$0
LBG	sarum twill A	+$0
LBH	earthen twill A	+$0
LBJ	graphite twill A	+$0
LBM	crisp linen A	+$0
LBN	classic linen A	+$0
LBP	casual linen A	+$0
LBQ	white twill A	+$0
LT	light tone A	+$0
LU	soft white A	+$0
MT	medium tone A	+$0
WL	sandstone A	+$0
WN	warm grey neutral A	+$0

Wood Veneer

For veneer (W)

2U	light brown walnut A	+$55
40	dark brown walnut A	+$55
ET	clear on ash A	+$55
EU	oak on ash A	+$55
EV	walnut on ash A	+$55

Step 7. Edge Finish

For laminate top/thermoplastic edge (L)

76	light brown walnut A	+$0
8Q	folkstone grey A	+$0
8Z	neutral grey A	+$0
91	white A	+$0
98	studio white A	+$0
BU	black umber A	+$0
CL	cool grey neutral A	+$0
HF	inner tone light A	+$0
HM	natural maple A	+$0
HP	light anigre A	+$0
HT	inner tone A	+$0
HX	aged cherry A	+$0
HY	walnut on cherry A	+$0
JB	millwork cherry A	+$0
LA	light ash A	+$0
LBA	clear on ash A	+$0
LBR	phantom ecru A	+$0
LBS	phantom cocoa A	+$0
LBU	medium matte walnut A	+$0
LBV	warm grey teak A	+$0
LBB	oak on ash A	+$0
LBC	walnut on ash A	+$0
LBD	dark brown walnut A	+$0
LBF	neutral twill A	+$0
LBG	sarum twill A	+$0
LBH	earthen twill A	+$0
LBJ	graphite twill A	+$0
LBK	pewter mesh A	+$0
LBL	steel mesh A	+$0
LBM	crisp linen A	+$0
LBN	classic linen A	+$0
LBP	casual linen A	+$0
LBQ	white twill A	+$0
LU	soft white A	+$0
MT	medium tone A	+$0
WL	sandstone A	+$0
WN	warm grey neutral A	+$0

For laminate top/universal edge (U)

PLY	plywood edge A	+$50

Closed Leg, Standing End, Double

continued

Step 8. Bracket Finish		
Metallic Paint		
MS	metallic silver A	+$0
Sand Texture Paint		
91	white A	+$0
98	studio white A	+$0
BK	black A	+$0
G1	graphite A	+$0

Beams, Rectangular Primary GNBR.

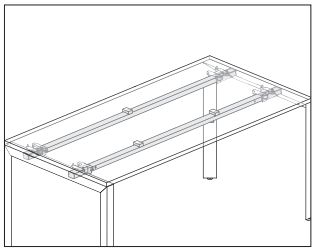

Product Information

Description

This pair of beams connects to end, asymmetrical, and intermediate Engage legs, and is required for the support of rectangular primary surfaces. Beams also provide attachment and support for cable management, screens, and other elements. Attachment hardware packs ordered separately.

Notes

To connect beams to fixed surfaces and legs, order hardware pack (GNHPF.). To connect beams to sliding surfaces and legs, use generic hardware pack (GNHRS.) when using primary sliding surfaces (GNTRD., GNTRF., GNTRG., GNTRN.) with generic (G) attachment option or primary performance rail surfaces (GNTRR.) only.

Dimensions

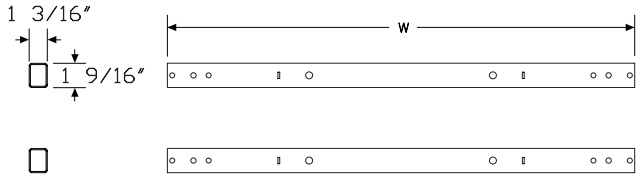

Specification Information

Step 1.

GNBR.

Step 2. Width

36	36″ wide
42	42″ wide
48	48″ wide
54	54″ wide
60	60″ wide
66	66″ wide
72	72″ wide
78	78″ wide A
84	84″ wide A
96	96″ wide A

Prices for Steps 1-2.

GNBR.	**36**	$91
	42	$96
	48	$101
	54	$147
	60	$132
	66	$183
	72	$161
	78	$225
	84	$236
	96	$253

Step 3. Finish

Sand Texture Paint

91	white	+$13
98	studio white	+$0
BK	black	+$0
CL	cool grey neutral	+$0
G1	graphite	+$13

Beams, Meeting End GNBM.

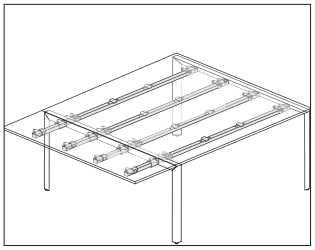

Product Information

Description

This pair of beams connects to a meeting end and intermediate Engage legs, and is required when specifying a meeting end surface across the end of a back-to-back configuration. Beams also provide attachment and support for cable management, screens, and other elements. Attachment hardware packs ordered separately.

Notes

Specify beam size to match the width of the adjacent rectangular primary surface.

To connect beams to fixed surfaces and legs, order hardware pack (GNHPF.). To connect beams to sliding surfaces and legs, use generic hardware pack (GNHRS.) when using primary sliding surfaces (GNTRD., GNTRF., GNTRG., GNTRN.) with generic (G) attachment option or primary performance rail surfaces (GNTRR.) only.

To attach meeting end surface to the meeting end beams, specify 2 hardware packs (GNHPF.).

Meeting end beams are not usable in standing height applications.

Dimensions

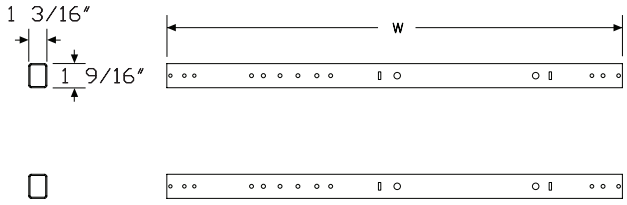

Specification Information

Step 1.

GNBM.

Step 2. Width

48	48″ wide
60	60″ wide
66	66″ wide
72	72″ wide
84	84″ wide

Prices for Steps 1-2.

GNBM.	**48**	$187
	60	$227
	66	$232
	72	$234
	84	$282

Performance Rail

GNRD.
GNRS.

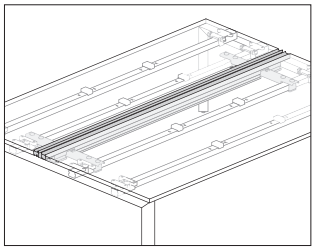

Product Information

Description

This rail attaches to the rear beam(s) in a single-sided or back-to-back rectangular application. It provides an attachment location for many different products, including desk up screens, monitor arms, personal shelves, task lights, and storage. Rail is anodized aluminum and comes with 1 in-line connector for aligning 2 rails placed side-by-side. Attachment hardware included.

Notes

Specify rail width to match width of beam to be used for attachment.

Surfaces must be specified to be used with performance rail.

Performance rail cannot be used within 120° application.

End cap is required to finish exposed end of rail. Order end cap (GNRC.) separately.

Trim strip is available to fill the center channel when screens are not being used. Order trim strip (GNRT.) separately.

Dimensions

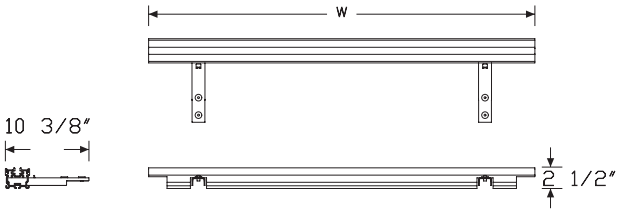

Single Sided Performance Rail

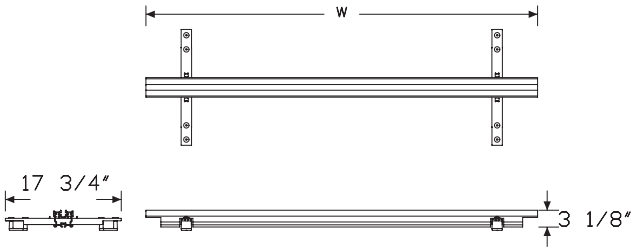

Double Sided Performance Rail

Specification Information

Step 1.

GN A

Step 2. Application

RD. performance rail, back-to-back application A

RS. performance rail, single-sided application A

Step 3. Width

42 42" wide A
48 48" wide A
54 54" wide A
60 60" wide A
66 66" wide A
72 72" wide A
78 78" wide A
84 84" wide A
96 96" wide A

Prices for Steps 1-3.

GNRD.	**42**	$322
	48	$338
	54	$356
	60	$373
	66	$389
	72	$407
	78	$423
	84	$441
	96	$473
GNRS.	**42**	$315
	48	$332
	54	$350
	60	$366
	66	$381
	72	$398
	78	$414
	84	$433
	96	$464

End Cap, Performance Rail GNRC.

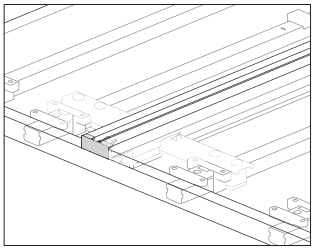

Product Information

Description

This end trim finishes the exposed ends of a Layout Studio® performance rail. Finish is folkstone grey. Quantity of 2.

Dimensions

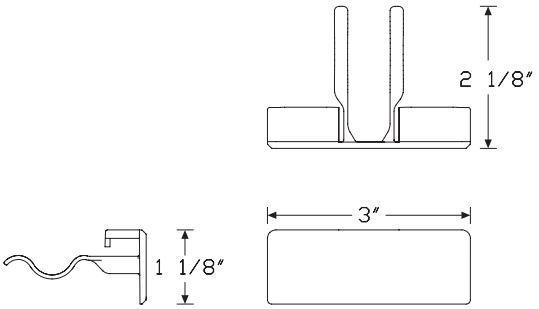

Specification Information

Step 1.

GN A

Step 2. Application

RC. end cap A

Step 3. Quantity

02 Package of 2 A

Prices for Steps 1-3.

GNRC. 02 $14

End Cap, Performance Rail, Package

GNRC.

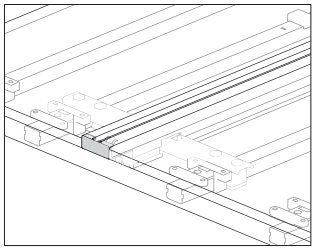

Product Information

Description

This end trim finishes the exposed ends of a Layout Studio® performance rail. Finish is folkstone grey. Quantity of 10.

Dimensions

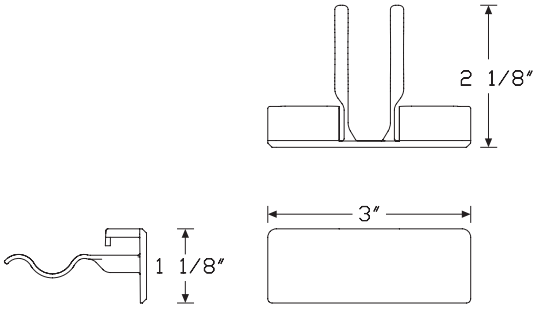

Specification Information

Step 1.

GN A

Step 2. Application

RC. end cap A

Step 3. Quantity

10 Package of 10 A

Prices for Steps 1-3.

GNRC. 10 $55

Trim Strip, Performance Rail Center Channel GNRT.

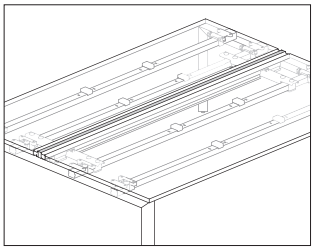

Product Information

Description

This aluminum trip strip fills an unused center channel of a Layout Studio® performance rail. It is anodized aluminum and can be field cut to desired length.

Notes

Trim strip width does not need to match width of performance rail.

The 3″-wide trim strip fills the center channel between the end of a bench and a shared cubby stanchion in an in-line application.

Dimensions

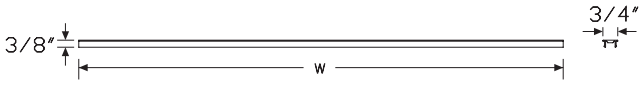

Specification Information

Step 1.

GN A

Step 2. Application

RT.	trim strip A

Step 3. Width

03	3″ wide A
42	42″ wide A
48	48″ wide A
54	54″ wide A
60	60″ wide A
66	66″ wide A
72	72″ wide A
78	78″ wide A
84	84″ wide A
96	96″ wide A

Prices for Steps 1-3.

GNRT.	**03**	$24
	42	$68
	48	$73
	54	$78
	60	$83
	66	$89
	72	$94
	78	$99
	84	$105
	96	$118

Access Door GNPD.

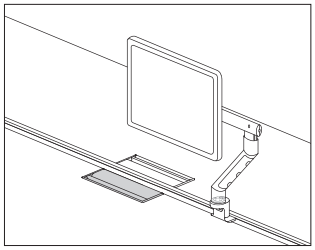

Product Information

Description

This metal door assembly fits inside an access cutout in the back edge of a Layout Studio® primary work surface and provides access to the power and data channel. It has a 3-sided frame and pivoting door.

Notes

Work surface must be specified with access door cutout. Order surface separately.

Dimensions

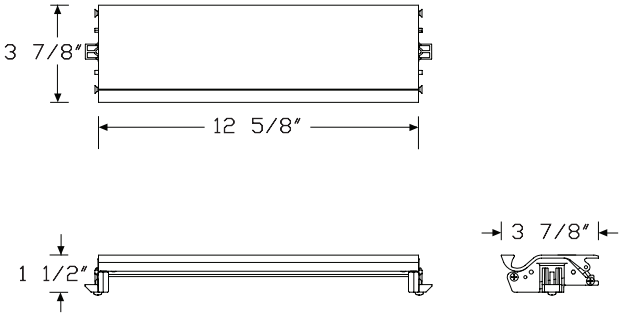

Specification Information

Step 1.

GNPD. A

Step 2. Application

A	edge mounted A	

Prices for Steps 1-2.

GNPD. A		$147

Step 3. Finish

Metallic Paint

MS	metallic silver A	+$0

Sand Texture Paint

BK	black A	+$0

Smooth Paint

91	white A	+$0
98	studio white A	+$0
G1	graphite A	+$0

Junction Block Attachment Bracket, Performance Rail

GNPA.

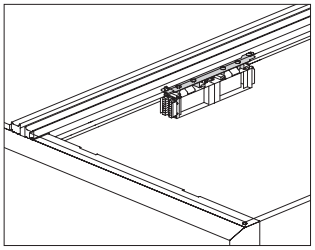

Product Information

Description

This painted steel bracket attaches a 4-circuit power block to a Layout Studio® performance rail. Finish is cool grey neutral.

Notes

Each single-sided (S) and back-to-back (D) bracket supports 1 double power block or 1 double and 1 single power block, between the 2 rear beams centered both front-to-back and left-to-right.

Each performance rail-attached bracket (S or D) supports 1 double or 1 single junction block.

Order 4-circuit junction block (GN1358.) separately.

Dimensions

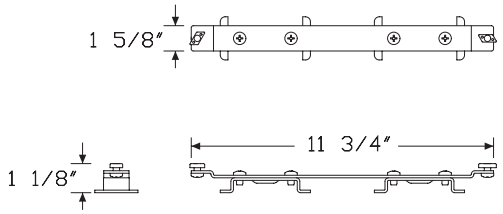

Specification Information

Step 1.

GNPA.R A

Step 2. Application

D performance rail-attached, back-to-back A

S performance rail-attached, single-sided A

Prices for Steps 1-2.

GNPA.R	**D**	$12
	S	$12

Junction Block, 4-Circuit GN1358

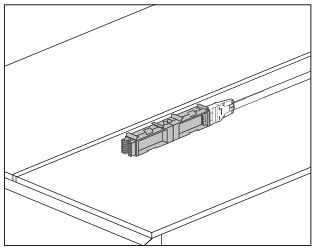

Product Information

Description

This block attaches to a junction block attachment bracket and accepts 4-circuit receptacles for access and distribution of up to 4 20-amp circuits. It has connection points at both ends for attaching a power entry, a 4-circuit power jumper, or block-to-block connector. Finish is black. It is UL Listed for use with Layout Studio® in the US and Canada.

Notes

Layout Studio modular power products are only compatible with other Layout Studio modular products, or with Connect™ 4-circuit modular components. Note that the UL listing for Layout Studio is no longer applicable when connecting Layout Studio power to Connect power.

For single-sided applications, specify the 2-duplex block (GN1358.2S) or the 1-duplex block (GN1358.1S).

For back-to-back applications, specify the 2-duplex block (GN1358.2B) or the 1-duplex block (GN1358.1B).

Order the following products separately:

- Duplex receptacle, 4-circuit (GN1355.)
- Junction block attachment bracket (GNPA.)

To route power from building to junction block, order 4-circuit power entry (GN1351. or GN1352.) separately.

To route power between junction blocks, order junction block to junction block jumper (GN1353.) separately.

To connect 2 junction blocks together, order a short block to block connector (GN1354.S) separately.

Dimensions

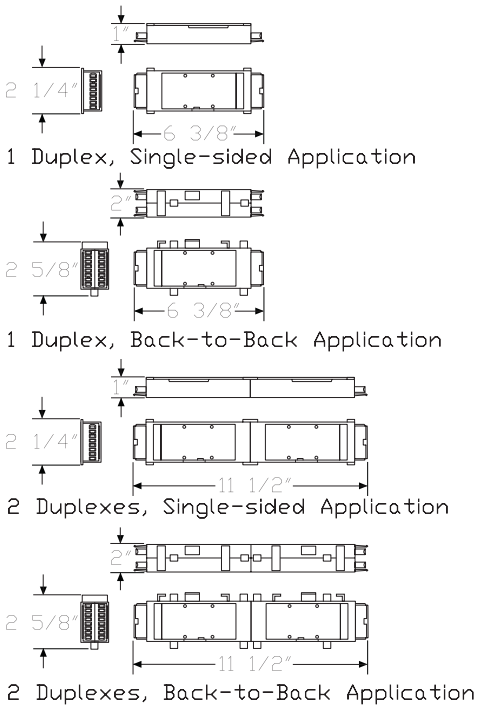

Specification Information

Step 1.

GN1358.

Step 2. Type

1S	1 duplex, single-sided application
1B	1 duplex, back-to-back application
2S	2 duplexes, single-sided application
2B	2 duplexes, back-to-back application

Step 3. Attachment Hardware

B	beam attached
R	performance rail attached

Prices for Steps 1-3.

		B	R
GN1358.	**1S**	$83	95
	1B	$90	100
	2S	$68	79
	2B	$74	85

Block Connector, 4-Circuit GN1354

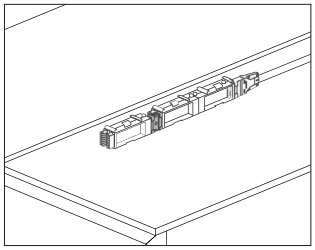

Product Information

Description

This connector connects 2 junction blocks together. Finish is black. Attachment hardware included. It is UL Listed for use with Layout Studio® in the US and Canada.

Notes

Layout Studio modular power products are only compatible with other Layout Studio modular products, or with Connect™ 4-circuit modular components. Note that the UL listing for Layout Studio is no longer applicable when connecting Layout Studio power to Connect power.

When 3 duplex receptacles are required per access point, use this connector to connect a GN1358.1S to a GN1358.2S for single-sided applications, or a GN1358.1B to a GN1358.2B for back-to-back applications.

Dimensions

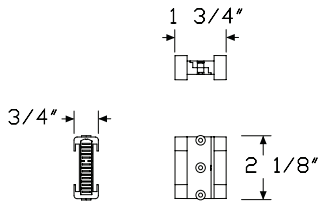

Short Receptacle-to-Receptacle Block Connector

Specification Information

Step 1.

GN1354.S	$45

Junction Block-to-Junction Block Jumper GN1353

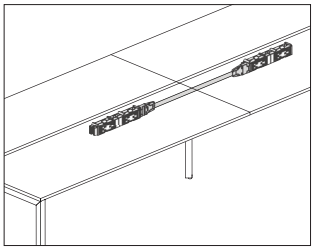

Product Information

Description

This adjustable power jumper distributes up to 4 20-amp circuits between 2 junction blocks. One end of the jumper extends an additional 3″ when connecting to an adjacent junction block. It is UL Listed for use with Layout Studio® in the US and Canada.

Notes

Layout Studio modular power products are only compatible with other Layout Studio modular products, or with Connect™ 4-circuit modular components. Note that the UL listing for Layout Studio is no longer applicable when connecting Layout Studio power to Connect power.

Finish on 5/8″ oval metallic conduit is silver.

For New York City, a harness cover (GNPH.) to span between wire management trays must be ordered separately.

Dimensions

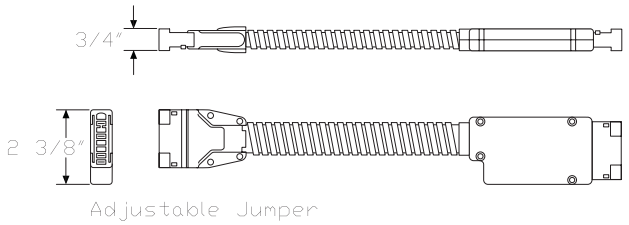

Specification Information

Step 1.

GN1353.

Step 2. Width

12	12″ wide
18	18″ wide
24	24″ wide
30	30″ wide
36	36″ wide
42	42″ wide
48	48″ wide
54	54″ wide
60	60″ wide
66	66″ wide
72	72″ wide
78	78″ wide
84	84″ wide
90	90″ wide
108	108″ wide
120	120″ wide
132	132″ wide
144	144″ wide

Step 3. Type

A	adjustable jumper

Prices for Steps 1-3.

		A
GN1353.	**12**	$72
	18	$78
	24	$82
	30	$89
	36	$94
	42	$98
	48	$103
	54	$109
	60	$115
	66	$119
	72	$124
	78	$131
	84	$135
	90	$140
	108	$155
	120	$164
	132	$176
	144	$186

Harness Cover GNPH.

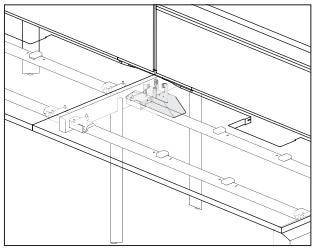

Product Information

Description

This cover provides a secure chase for the routing of a power harness between Layout Studio® wire management trays when UL1286 Listing is required.

Notes

Specify power harness separately.

Dimensions

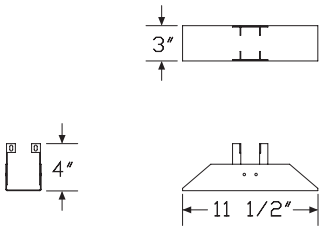

Specification Information

Step 1.

GNPH.	$24

Step 2. Finish

Metallic Paint

MS	metallic silver	+$0

Sand Texture Paint

91	white	+$0
98	studio white	+$0
BK	black	+$0
G1	graphite	+$0

Duplex Receptacle, 4-Circuit GN1355

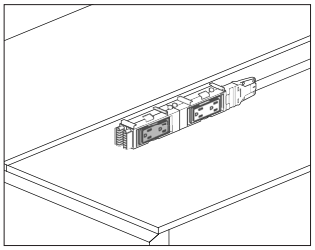

Product Information

Description

This 15- or 20-amp duplex receptacle attaches to a junction block to provide electrical access. Finish is black. Package of 1. It is UL Listed for use with Layout Studio® in the US and Canada.

Notes

Layout Studio modular power products are only compatible with other Layout Studio modular products, or with Connect™ 4-circuit modular components. Note that the UL listing for Layout Studio is no longer applicable when connecting Layout Studio power to Connect power.

Receptacle is labeled as I, II, III, or IV for circuit identification.

Order junction block (GN1358.) separately.

Dimensions

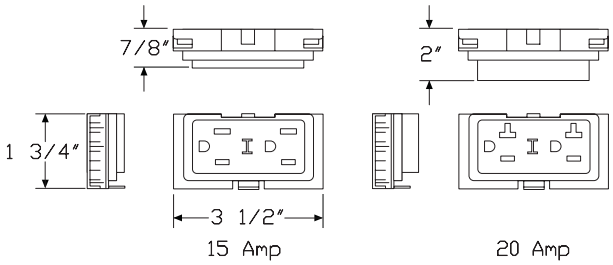

Specification Information

Step 1.

GN1355.

Step 2. Amps

15	15 amp
20	20 amp

Step 3. Circuit

1	circuit I
2	circuit II
3	circuit III
4	circuit IV

Prices for Steps 1-3.

		1	2	3	4
GN1355.	**15**	$21	21	21	21
	20	$26	26	26	26

Power Entry, 4-Circuit GN1351

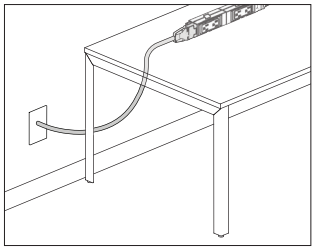

Product Information

Description

This power entry connects a building's electrical from a wall, floor, or column to the end of a 4-circuit junction block and distributes up to 4 20-amp circuits. UL Listed for use with Layout Studio® in the US and Canada.

Notes

Layout Studio modular power products are only compatible with other Layout Studio modular products, or with Connect™ 4-circuit modular components. Note that the UL listing for Layout Studio is no longer applicable when connecting Layout Studio power to Connect power.

Power entry can be field cut to the appropriate length.

For San Francisco, specify 3/8" flex metallic conduit option (C).

Finish color on liquid tight conduit is black. Finish color on metallic conduit is silver.

To manage and/or cover power entry, order umbilical riser (GNWF. or GNWG.) or floor power entry cover (GNPC.) separately.

A licensed electrician must wire the power entry to the building's electrical system.

Dimensions

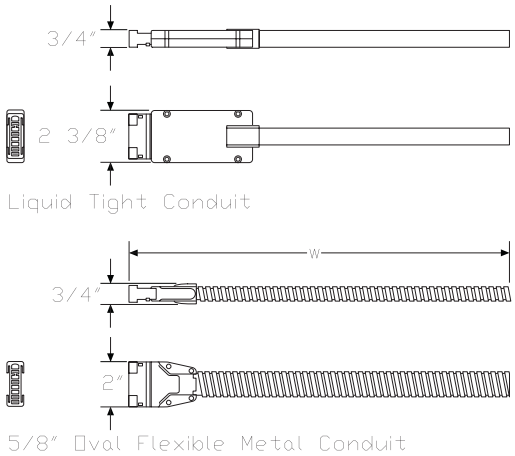

Specification Information

Step 1.

GN1351.

Step 2. Length

06	6' long
12	12' long
18	18' long
24	24' long

Step 3. Conduit Type

L	liquid tight conduit
C	3/8" flex metallic conduit

Prices for Steps 1-3.

		L	C
GN1351.	**06**	$139	139
	12	$197	197
	18	$257	257
	24	$330	330

Power Entry, 4-Circuit, New York City GN1352

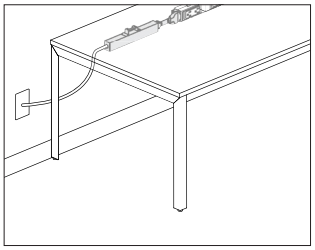

Product Information

Description

This power entry connects a building's electrical from a wall, floor, or column to the end of a 4-circuit junction block and distributes up to 4 20-amp circuits. It includes a junction box and harness. It is UL Listed for use with Layout Studio® in the US and Canada.

Notes

Layout Studio modular power products are only compatible with other Layout Studio modular products, or with Connect™ 4-circuit modular components. Note that the UL listing for Layout Studio is no longer applicable when connecting Layout Studio power to Connect power.

Power entry comes with a 38″ festoon.

A licensed electrician must wire the power entry to the building's electrical system.

Dimensions

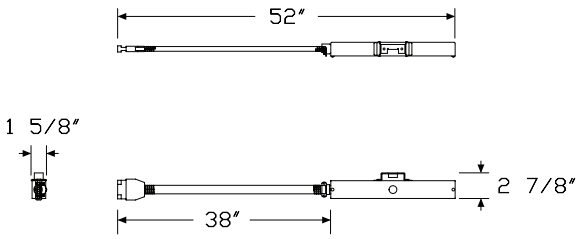

Specification Information

Step 1.

GN1352.38	$220

Wire Management Tray, Single, Performance Rail

GNWS.

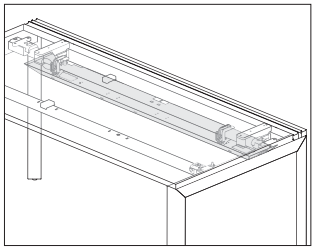

Product Information

Description

This painted steel tray holds power and voice/data cables within a Layout Studio® single-sided application when a performance rail is being used. Attachment hardware included.

Notes

Specify tray size to match beam width.

To route power and/or data from floor to tray, specify umbilical riser (GNWF.T or GNWG.T) separately.

Dimensions

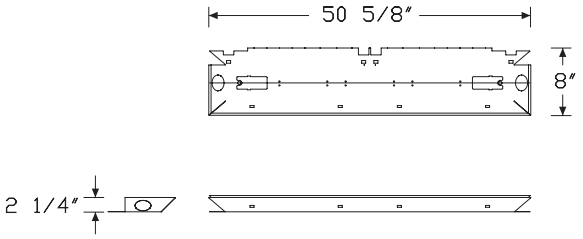

Specification Information

Step 1.

GN A

Step 2. Type

WS.R single A

Step 3. Size

42	42″ wide	A
48	48″ wide	A
54	54″ wide	A
60	60″ wide	A
66	66″ wide	A
72	72″ wide	A
78	78″ wide	A
84	84″ wide	A
96	96″ wide	A

Prices for Steps 1-3.

GNWS.R	**42**	$142
	48	$144
	54	$168
	60	$194
	66	$197
	72	$199
	78	$205
	84	$222
	96	$239

Step 4. Finish

MS	metallic silver	A	+$0
91	white	A	+$0
98	studio white	A	+$0
BK	black	A	+$0
G1	graphite	A	+$0

Wire Management Tray

GNWD.
GNWS.

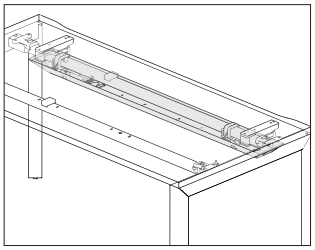

Product Information

Description

This painted steel tray provides a location to hold and manage power and voice/data cables within a Layout Studio® environment. Trays are available for both back-to-back and single-sided applications.

Notes

Single-sided wire management tray is for use with a non-rail surface. For performance rail, order wire management tray, single, performance rail (GNWS.R) separately.

The double unit attaches directly to beams with included hardware.

The single unit attaches to beams, but also requires an additional bracket. For each single tray, order 2 generic beam clamps (GNSG.) separately. If a desk up or modesty screen is being used, the generic beam clamps are not required.

Specify tray width to match beam width.

For use with double tray, order optional cable management clips (GNWC.) separately.

To route power and/or data from the floor to a cable tray, order the umbilical riser (GNWF.T or GNWG.T) separately.

Tray includes a knock-out on each end to allow a power jumper to pass from 1 tray to the next when UL1286 Listing is required (primarily New York City). Order harness cover (GNPH.) separately.

Dimensions

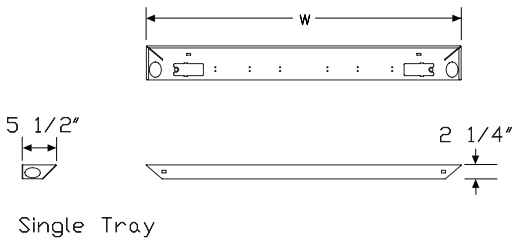

Single Tray

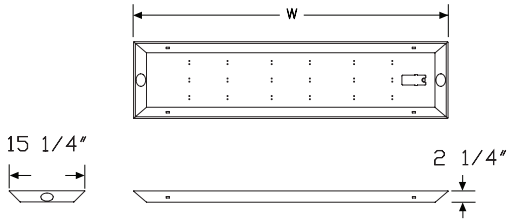

Double Tray

Specification Information

Step 1.

GN

Step 2. Type

WS.	single
WD.	double

Step 3. Width

36	36" wide
42	42" wide
48	48" wide
54	54" wide
60	60" wide
66	66" wide
72	72" wide
78	78" wide
84	84" wide
96	96" wide

Prices for Steps 1-3.

GNWS.	**36**	$141
	42	$143
	48	$145
	54	$169
	60	$194
	66	$197
	72	$199
	78	$205
	84	$223
	96	$239
GNWD.	**36**	$135
	42	$139
	48	$143
	54	$162
	60	$177
	66	$180
	72	$182
	78	$187
	84	$205
	96	$220

Step 4. Finish

Metallic Paint

MS	metallic silver	+$0

Sand Texture Paint		
91	white	+$0
98	studio white	+$0
BK	black	+$0
G1	graphite	+$0

Data Module GNWM.

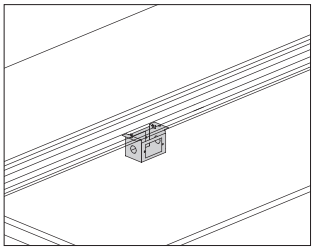

Product Information

Description

This housing mounts to the underside of a Layout Studio® performance rail or to the bottom of a wire management tray and supports face plates with voice/data ports. Finish is cool grey neutral. Attachment hardware included.

Notes

Housing accepts a standard NEMA data faceplate.

Dimensions

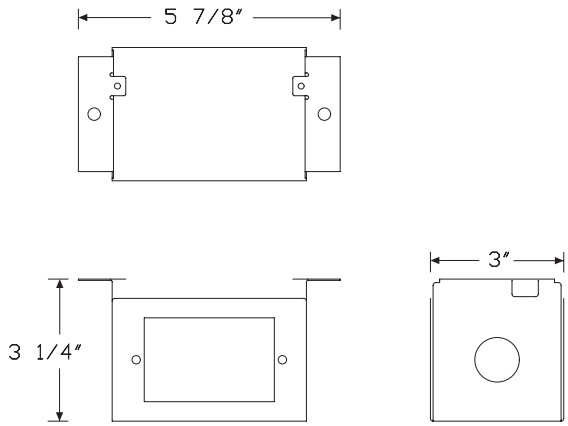

Specification Information

Step 1.

GN A

Step 2. Application

WM. data box A

Prices for Steps 1-2.

GNWM.	$28

Cable Management Clips, Double Tray GNWC.

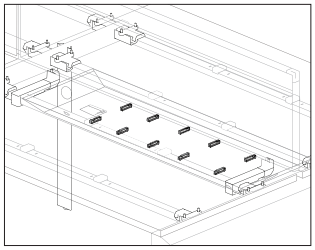

Product Information

Description

These clips attach into holes in the bottom of a double cable management tray to manage voice/data cables. Package includes 10 clips.

Dimensions

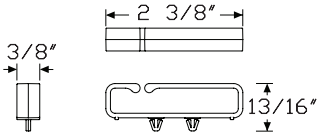

Specification Information

Step 1.

GNWC.

Step 2. Quantity

10 10 per pack

Prices for Steps 1-2.

GNWC. 10 $15

Floor Power Entry Cover GNPC.

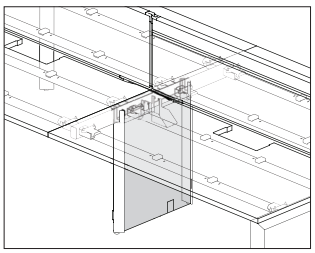

Product Information

Description

This 2-piece painted metal cover encloses the open space located between the 2 legs of a Layout Studio® 48"-, 60"-, or 72"-deep intermediate desk leg. It is used to conceal a floor power entry and/or cables from the floor to a wire management tray. Attachment hardware included.

Dimensions

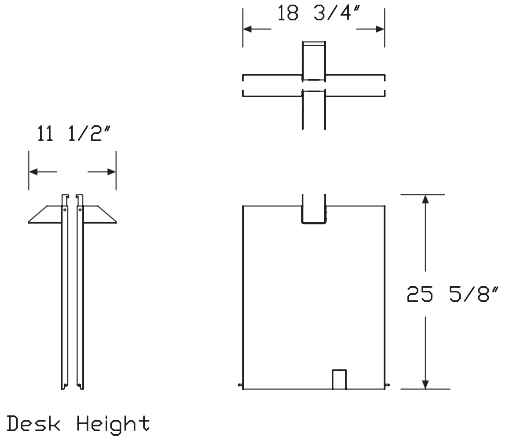

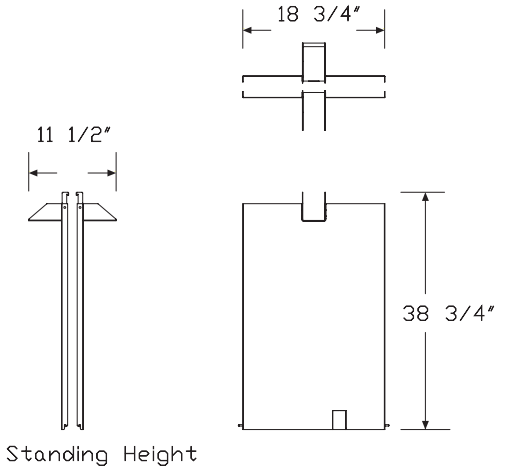

Specification Information

Step 1.

GNPC.

Step 2. Height

F	desk height	
S	standing height	

Prices for Steps 1-2.

GNPC.	**F**	$216
	S	$256

Step 3. Finish

Metallic Paint

MS	metallic silver	+$0

Sand Texture Paint

91	white	+$0
98	studio white	+$0
BK	black	+$0
G1	graphite	+$0

Umbilical Riser, Fixed Height

GNWF.
GNWG.

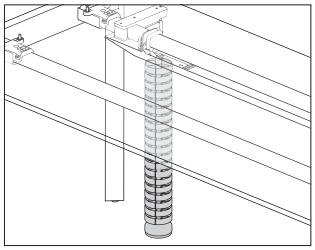

Product Information

Description

This umbilical riser routes power and/or data cables from the floor to the underside of a surface or wire management tray.

Notes

For data capacity, see Cable Capacity Chart in Omni.

Dimensions

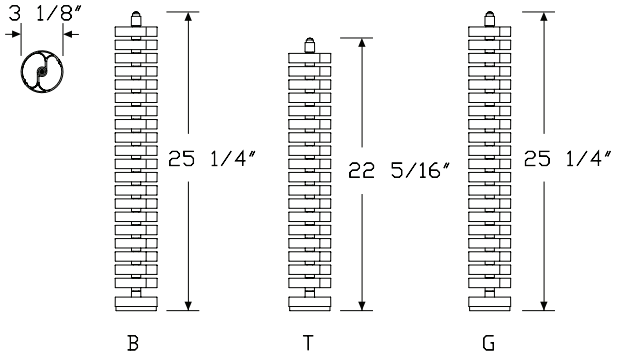

Fixed, seated height

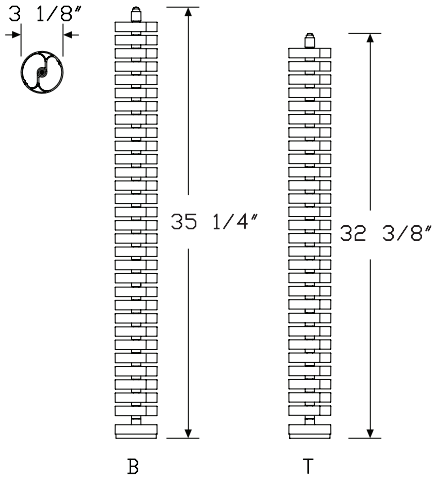

Fixed, standing height

Specification Information

Step 1.

GN

Step 2. Type

WG.	fixed, standing height A
WF.	fixed, seated height

Step 3. Attachment

For fixed, seated height (WF.)

B	beam attachment
T	tray attachment
G	generic attachment

For fixed, standing height (WG.)

B	beam attachment
T	tray attachment

Prices for Steps 1-3.

GNWG.	**B**	$163
	T	$157
GNWF.	**B**	$80
	T	$73
	G	$88

Step 4. Finish

Metallic Paint

MS	metallic silver	+$0

Sand Texture Paint

91	white	+$0
98	studio white	+$0
BK	black	+$0
G1	graphite	+$0

Primary Worksurface, Rectangular, Performance Rail

GNTRR.

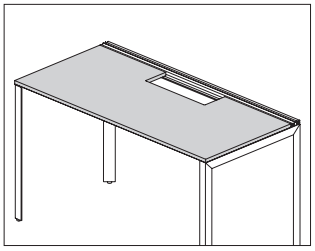

Product Information

Description

This squared-edge surface attaches to 1 set of primary beams when using a performance rail. It can be used in a table, single-sided bench, or back-to-back bench application. It has a laminate top and thermoplastic edge, laminate top with a thermoplastic backed plywood edge, or veneer top and edge. Surface is 1 1/8" thick. It is available with or without an access door cutout which provides access to the power and data channel.

Notes

Gap between back edge of surface and performance rail is 0.6" deep and runs the full width of the surface.

For surfaces with access cutout (C, D, L, R), order access door (GNPD.) separately.

Specify attachment hardware kit separately.

For fixed attachment, order hardware pack (GNHPF.) separately.

For quick release attachment, order the quick release attachment hardware pack (GNHPA.) in addition to the fixed attachment hardware pack (GNHPF.) separately.

Sliding surface attachment is available for 24"- or 30"-deep surfaces; order rectangular primary surface sliding hardware pack (GNHRS.) separately.

Attaching clamp-mounted components to back edge of a sliding surface may result in reduced surface extension.

Access door cutouts specified on left side (L) or right side (R) are located along the back edge of the surface at a fixed distance from the left or right end.

Dimensions

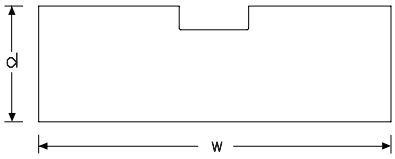

For 42"–96" wide, access door cutout centered

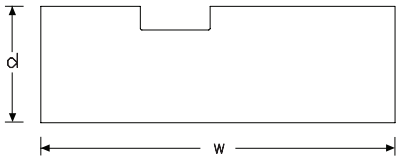

For 54"–78" wide, access door cutout left side

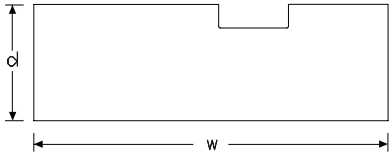

For 54"–78" wide, access door cutout right side

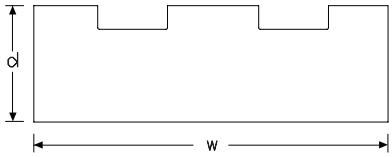

For 84" and 96" wide, two cutouts

Primary Worksurface, Rectangular, Performance Rail

continued

Specification Information

Step 1.

GN A

Step 2. Type

TRR. rectangular primary surface for use with performance rail A

Step 3. Depth

24 24" deep A
30 30" deep A

Step 4. Width

42 42" wide A
48 48" wide A
54 54" wide A
60 60" wide A
66 66" wide A
72 72" wide A
78 78" wide A
84 84" wide A
96 96" wide A

Step 5. Access Detail

For 42" wide (42) or 48" wide (48)

N no access A
C access door cutout, centered A

For 54" wide (54), 60" wide (60), 66" wide (66), 72" wide (72), or 78" wide (78)

N no access A
L access door cutout, left side A
R access door cutout, right side A
C access door cutout, centered A

For 84" wide (84) or 96" wide (96)

N no access A
C access door cutout, centered A
D two access door cutouts A

Step 6. Surface Material

L laminate top/thermoplastic edge A
U laminate top/universal edge A
W veneer A

Prices for Steps 1-6.

		NL	NU	NW	LL	LU	LW
GNTRR.24	**42**	$185	185	299	—	—	—
	48	$200	200	326	—	—	—
	54	$219	219	358	240	240	378
	60	$237	237	388	258	258	408
	66	$258	258	428	281	281	448
	72	$280	280	465	300	300	485
	78	$319	319	530	339	339	551
	84	$358	358	596	—	—	—
	96	$388	388	648	—	—	—
30	**42**	$214	212	341	—	—	—
	48	$230	230	376	—	—	—
	54	$252	252	413	274	274	437
	60	$274	274	451	295	295	473
	66	$304	304	496	326	326	517
	72	$326	326	540	348	348	562
	78	$370	370	616	392	392	639
	84	$413	413	694	—	—	—
	96	$451	450	756	—	—	—

		DL	DU	DW	RL	RU	RW
GNTRR.24	**54**	—	—	—	$240	240	378
	60	—	—	—	$258	258	408
	66	—	—	—	$281	281	448
	72	—	—	—	$300	300	485
	78	—	—	—	$339	339	551
	84	$400	400	639	—	—	—
	96	$432	432	690	—	—	—
30	**54**	—	—	—	$274	274	437
	60	—	—	—	$295	295	473
	66	—	—	—	$326	326	517
	72	—	—	—	$348	348	562
	78	—	—	—	$392	392	639
	84	$458	458	737	—	—	—
	96	$494	494	799	—	—	—

		CL	CU	CW
GNTRR.24	**42**	$207	206	322
	48	$223	223	348
	54	$240	240	378
	60	$258	258	408
	66	$281	281	448
	72	$300	300	485
	78	$339	339	551
	84	$378	378	616
	96	$408	408	670

30	**42**	$234	234	363
	48	$251	251	398
	54	$274	274	437
	60	$295	295	473
	66	$326	326	517
	72	$348	348	562
	78	$392	392	639
	84	$437	437	715
	96	$472	472	777

Step 7. Surface Finish

For laminate top/thermoplastic edge (L) or laminate top/universal edge (U)

76	light brown walnut A	+$0
8Q	folkstone grey A	+$0
91	white A	+$0
98	studio white A	+$0
CL	cool grey neutral A	+$0
HF	inner tone light A	+$0
HM	natural maple A	+$0
HP	light anigre A	+$0
HT	inner tone A	+$0
HX	aged cherry A	+$0
HY	walnut on cherry A	+$0
LA	light ash A	+$0
LBA	clear on ash A	+$0
LBB	oak on ash A	+$0
LBC	walnut on ash A	+$0
LBD	dark brown walnut A	+$0
LBF	neutral twill A	+$0
LBG	sarum twill A	+$0
LBH	earthen twill A	+$0
LBJ	graphite twill A	+$0
LBM	crisp linen A	+$0
LBN	classic linen A	+$0
LBP	casual linen A	+$0
LBQ	white twill A	+$0
LBR	phantom ecru A	+$0
LBS	phantom cocoa A	+$0
LBU	medium matte walnut A	+$0
LBV	warm grey teak A	+$0
LT	light tone A	+$0
LU	soft white A	+$0
MT	medium tone A	+$0
WL	sandstone A	+$0
WN	warm grey neutral A	+$0

For veneer (W)

2U	light brown walnut A	+$55
40	dark brown walnut A	+$55
ET	clear on ash A	+$55
EU	oak on ash A	+$55
EV	walnut on ash A	+$55
UX	walnut on cherry A	+$55

Step 8. Edge Finish

For laminate top/thermoplastic edge (L)

76	light brown walnut A	+$0
8Q	folkstone grey A	+$0
91	white A	+$0
98	studio white A	+$0
CL	cool grey neutral A	+$0
HF	inner tone light A	+$0
HM	natural maple A	+$0
HP	light anigre A	+$0
HT	inner tone A	+$0
HX	aged cherry A	+$0
HY	walnut on cherry A	+$0
LA	light ash A	+$0
LBA	clear on ash A	+$0
LBR	phantom ecru A	+$0
LBS	phantom cocoa A	+$0
LBU	medium matte walnut A	+$0
LBV	warm grey teak A	+$0
LBB	oak on ash A	+$0
LBC	walnut on ash A	+$0
LBD	dark brown walnut A	+$0
LBF	neutral twill A	+$0
LBG	sarum twill A	+$0
LBH	earthen twill A	+$0
LBJ	graphite twill A	+$0
LBK	pewter mesh A	+$0
LBL	steel mesh A	+$0
LBM	crisp linen A	+$0
LBN	classic linen A	+$0
LBP	casual linen A	+$0
LBQ	white twill A	+$0
LU	soft white A	+$0
WL	sandstone A	+$0
WN	warm grey neutral A	+$0

For laminate top/universal edge (U)

PLY	plywood edge A	+$50

Meeting End, Rectangular

GNTDG.
GNTDN.

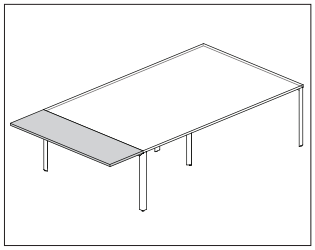

Product Information

Description

This 20″-deep squared-edge surface attaches to 2 sets of meeting end beams positioned at the end of a back-to-back bench application to create a meeting space. It has a laminate top with thermoplastic edge, laminate top with a thermoplastic backed plywood edge, or veneer top and edge. An optional grommet cut-out and grommet is available. Surface is 1 1/8″ thick.

Notes

Grommet color matches the laminate color for solid color laminates, and is graphite for all other laminates and veneers.

For each meeting end surface, order 2 fixed attachment hardware packs (GNHPF.) separately.

Dimensions

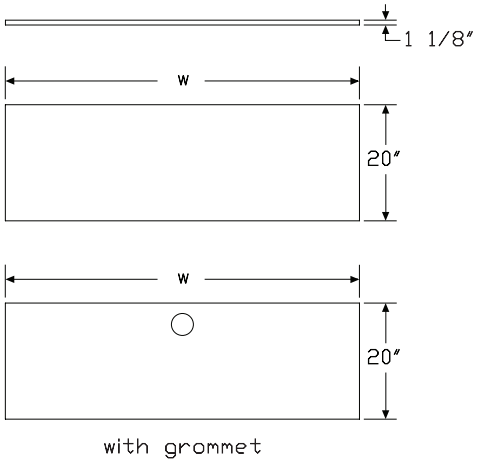

Specification Information

Step 1.

GN

Step 2. Type

TD rectangular meeting end

Step 3. Access Detail

N. no access cut-out
G. grommet

Step 4. Depth

20 20″ deep

Step 5. Width

48 48″ wide
60 60″ wide
72 72″ wide

Step 6. Attachment

F non-sliding

Step 7. Surface Material

L laminate top/thermoplastic edge
W veneer
U laminate top/universal edge

Prices for Steps 1-7.

		FL	FW	FU
GNTDN.20	**48**	$175	298	175
	60	$205	368	205
	72	$253	438	253
GNTDG.20	**48**	$196	317	196
	60	$226	388	226
	72	$274	458	274

Step 8. Surface Finish

For laminate top/thermoplastic edge (L) or laminate top/universal edge (U)

76	light brown walnut	+$0
91	white	+$0
98	studio white	+$0
8Q	folkstone grey	+$0
CL	cool grey neutral	+$0
HF	inner tone light	+$0
HM	natural maple	+$0
HP	light anigre	+$0
HT	inner tone	+$0
HX	aged cherry	+$0
HY	walnut on cherry	+$0
LA	light ash	+$0
LBA	clear on ash	+$0
LBR	phantom ecru	+$0
LBS	phantom cocoa	+$0
LBU	medium matte walnut	+$0
LBV	warm grey teak	+$0
LBB	oak on ash	+$0
LBC	walnut on ash	+$0
LBD	dark brown walnut	+$0
LBF	neutral twill	+$0
LBG	sarum twill	+$0
LBH	earthen twill	+$0
LBJ	graphite twill	+$0
LBM	crisp linen	+$0
LBN	classic linen	+$0
LBP	casual linen	+$0
LBQ	white twill	+$0
LU	soft white	+$0
WL	sandstone	+$0
WN	warm grey neutral	+$0

Wood Veneer

For veneer (W)

2U	light brown walnut	+$55
40	dark brown walnut	+$55
ET	clear on ash	+$55
EU	oak on ash	+$55
EV	walnut on ash	+$55

Step 9. Edge Finish

For laminate top/thermoplastic edge (L)

76	light brown walnut	+$0
8Q	folkstone grey	+$0
91	white	+$0
98	studio white	+$0
CL	cool grey neutral	+$0
LA	light ash	+$0
LBA	clear on ash	+$0
LBR	phantom ecru	+$0
LBS	phantom cocoa	+$0
LBU	medium matte walnut	+$0
LBV	warm grey teak	+$0
LBB	oak on ash	+$0
LBC	walnut on ash	+$0
LBD	dark brown walnut	+$0
LBF	neutral twill	+$0
LBG	sarum twill	+$0
LBH	earthen twill	+$0
LBJ	graphite twill	+$0
LBK	pewter mesh	+$0
LBL	steel mesh	+$0
LBM	crisp linen	+$0
LBN	classic linen	+$0
LBP	casual linen	+$0
LBQ	white twill	+$0
WL	sandstone	+$0
WN	warm grey neutral	+$0
HF	inner tone light	+$0
HM	natural maple	+$0
HP	light anigre	+$0
HT	inner tone	+$0
HX	aged cherry	+$0
HY	walnut on cherry	+$0
LU	soft white	+$0

For laminate top/universal edge (U)

PLY	plywood edge [A]	+$50

Hardware Pack, Fixed Surfaces

GNHDF.
GNHPF.
GNHSF.

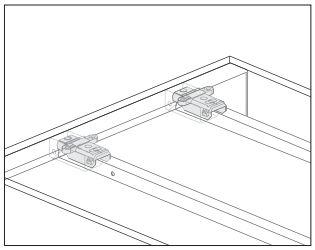

Product Information

Description

This hardware pack is required in order to connect a set of beams to a pair of Engage legs, and to provide a fixed attachment of a surface.

Notes

1 hardware pack is required for each beam kit specified. Meeting end surfaces (GNTDG., GNTDN.) require an additional 2 rectangular primary hardware packs (GNHPF.) per surface.

For quick release attachment, a quick release hardware pack (GNHPA., GNHDA.) can be added. Specify 1 hardware pack for each beam kit.

Specification Information

Step 1.

GNH

Step 2. Type

PF.	rectangular primary
DF.	120° - primary
SF.	return

Prices for Steps 1-2.

GNHPF.	$52
GNHDF.	$115
GNHSF.	$137

Hardware Pack, Quick Release Attachment

GNHDA.
GNHPA.

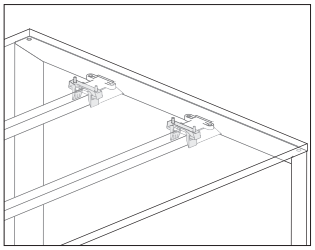

Product Information

Description

This hardware pack provides for the attachment and removal of surfaces without the use of any tools.

Notes

Specify 1 quick release hardware pack for each fixed attachment hardware pack (GNHDF., GNHPF., GNHSF.) specified.

Dimensions

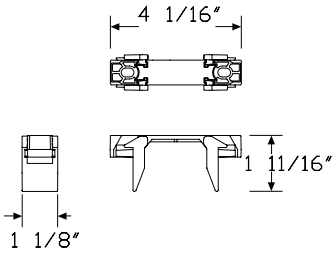

Specification Information

Step 1.

GNH

Step 2. Type

PA.	rectangular surface
DA.	120° surface

Prices for Steps 1-2.

GNHPA.	$18
GNHDA.	$27

Hardware Pack - Sliding - Rectangular Primary GNHRS.

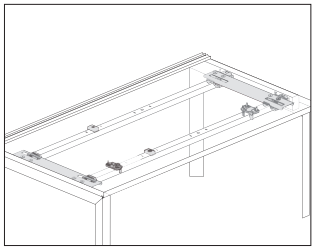

Product Information

Description

This hardware pack attaches a 24"-deep or 30"-deep rectangular primary surface to a set of beams when using a performance rail or when using a non-rail surface with the generic attachment option. It allows the surface to slide, providing access to a cable management tray.

Notes

Specify 1 hardware pack for each sliding surface.

Attaching clamp-mounted components to the back edge of a sliding surface may result in reduced surface extension.

Dimensions

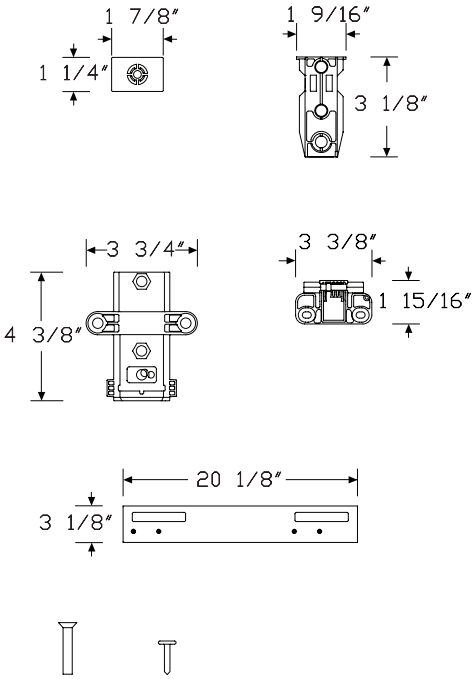

Specification Information

Step 1.

GNHRS. A

Step 2. Depth

24 for 24"-deep surface A

30 for 30"-deep surface A

Prices for Steps 1-2.

GNHRS.	**24**	$198
	30	$198

Pari Screen, Desk Up, Performance Rail

GNSDRT

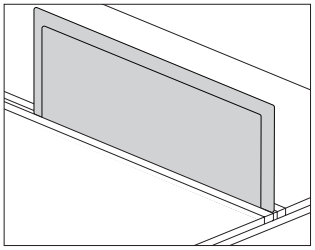

Product Information

Description

This tackable frameless fabric screen attaches to a Layout Studio® performance rail and provides boundary above a surface at the back edge of the work surface. It comes with an alignment clip to align 2 screens when placed side-by-side. Attachment hardware included.

Notes

Screen width does not need to match performance rail width.

When using 78″-wide performance rail, specify 2 39″-wide screens to provide full screen coverage. When using 84″-wide rail, specify 2 42″-wide screens. When using 96″-wide rail, specify 2 48″-wide screens.

Screen attaches to performance rail with provided hardware. No additional hardware is required.

Screen is shared in back-to-back applications.

All fabric is railroaded.

Screen accepts Customer's Own Material (COM). Yardage is estimated for nondirectional 54″-wide fabrics.

Width—Yardage
36—1.32
39—1.42
42—1.51
48—1.70
54—1.89
60—2.08
66—2.27
72—2.46

For information on multiple quantities or directional fabrics, contact COM Department. See Order Information in Appendices.

Dimensions

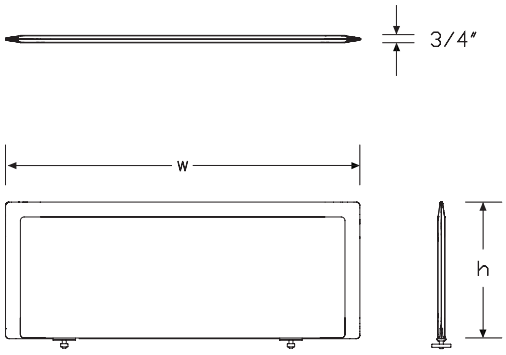

Specification Information

Step 1.

GN A

Step 2. Type

SD desk up A

Step 3. Configuration

R performance rail attachment A

Step 4. Edge

T. Pari screen A

Step 5. Height

42 42″ high A
46 46″ high A

Step 6. Width

36 36″ wide A
39 39″ wide A
42 42″ deep A
48 48″ wide A
54 54″ wide A
60 60″ wide A
66 66″ wide A
72 72″ wide A

Prices for Steps 1-6.

		36	39	42	48	54	60
GNSDRT.	**42**	$457	494	514	544	583	624
	46	$473	510	530	558	600	644

		66	72
GNSDRT.	**42**	$668	700
	46	$684	723

Step 7. Surface Finish

Price Category C	+$89
Price Category 1	+$0
Price Category 2	+$12
Price Category 3	+$20
Price Category 4	+$32
Price Category E	+$136

Flat Edge Screen, Desk Up, Performance Rail GNSDRS

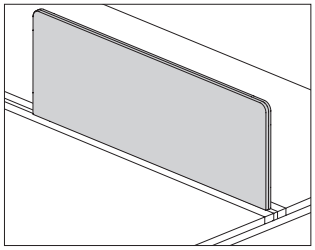

Product Information

Description

This tackable frameless fabric screen attaches to a Layout Studio® performance rail and provides boundary above a surface at the back edge of the work surface. It has a flat edge and comes with an alignment clip to align 2 screens when placed side-by-side. Attachment hardware included.

Notes

Screen width does not need to match performance rail width.

When using 78"-wide performance rail, specify 2 39"-wide screens to provide full screen coverage. When using 84"-wide rail, specify 2 42"-wide screens. When using 96"-wide rail, specify 2 48"-wide screens.

Screen attaches to performance rail with provided hardware. No additional hardware is required.

Screen is shared in back-to-back applications.

All fabric is railroaded.

Screen accepts Customer's Own Material (COM). Yardage is estimated for nondirectional 54"-wide fabrics.

Width—Yardage

36—1.32
39—1.42
42—1.51
48—1.70
54—1.89
60—2.08
66—2.27
72—2.46

For information on multiple quantities or directional fabrics, contact COM Department. See Order Information in Appendices.

Dimensions

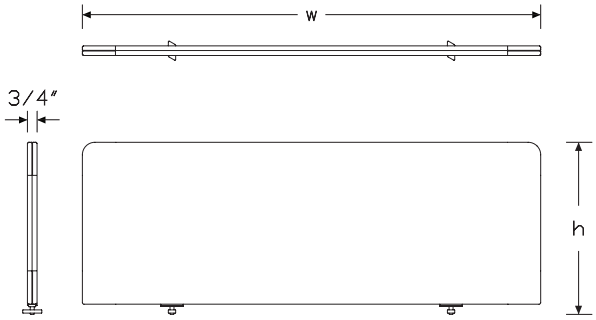

Specification Information

Step 1.

GN A

Step 2. Type

SD desk up A

Step 3. Configuration

R performance rail attachment A

Step 4. Edge

S. tackable fabric with flat edge A

Step 5. Height

42 42" high A
46 46" high A

Step 6. Width

36 36" wide A
39 39" wide A
42 42" wide A
48 48" wide A
54 54" wide A
60 60" wide A
66 66" wide A
72 72" wide A

Prices for Steps 1-6.

		36	39	42	48	54	60
GNSDRS.	**42**	$281	296	311	326	341	357
	46	$296	311	326	340	359	376

		66	72
GNSDRS.	**42**	$377	397
	46	$392	421

Step 7. Surface Finish

Price Category 1	+$0
Price Category 2	+$12
Price Category 3	+$20
Price Category C	+$89
Price Category 4	+$32
Price Category E	+$136

Glass Screen, Desk Up, Frameless, Performance Rail

GNSDRG

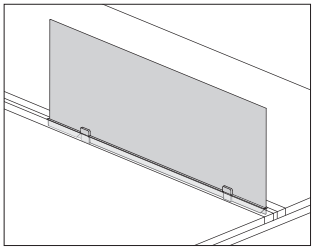

Product Information

Description

This frameless glass screen attaches to a Layout Studio® performance rail and provides boundary above a surface at the back edge of the work surface. Attachment hardware included.

Notes

Screen width does not need to match performance rail width.

Screen attaches to performance rail with provided hardware. No additional hardware is required.

Screen is shared in back-to-back applications.

For no glass-for customer's own insert, the custom insert can be the following thickness:

- 1/4" option (NN)—0.219"-0.237" thick
- 3/8" option (N3)—0.361"-0.379" thick

The insert height can be up to 17 1/2" high.

Recommended materials are glass, acrylic, laminate, wood or materials that will remain straight over time.

Dimensions

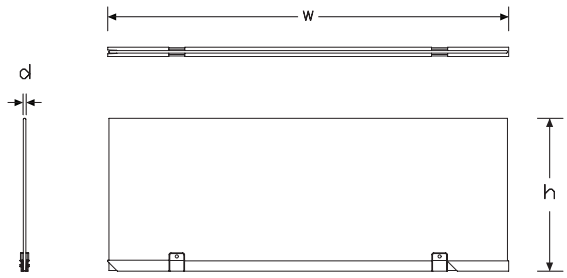

Specification Information

Step 1.

GN A

Step 2. Type

SD desk up A

Step 3. Configuration

R performance rail attachment A

Step 4. Material

G. glass A

Step 5. Height

42 42" high A
46 46" high A

Step 6. Width

36 36" wide A
42 42" wide A
48 48" wide A
54 54" wide A
60 60" wide A
66 66" wide A
72 72" wide A
78 78" wide A
84 84" wide A
96 96" wide A

Step 7. Surface Finish

TR clear glass - 1/4" thick A
5A opal etched - 1/4" thick A
NN no glass- for customer's own glass A
C3 clear glass - 3/8" thick A
G3 opal glass - 3/8" thick A
N3 no glass, for customer's own 3/8" thick glass A

Glass Screen, Desk Up, Frameless, Performance Rail

continued

Prices for Steps 1-7.

		TR	5A	NN	C3	G3	N3
GNSDRG. 42	**36**	$297	386	177	371	482	177
	42	$334	435	214	417	543	214
	48	$355	460	228	442	575	228
	54	$378	493	229	473	614	229
	60	$405	527	230	507	659	230
	66	$435	564	231	543	705	231
	72	$456	591	232	569	739	232
	78	$480	623	233	600	780	233
	84	$507	659	234	633	823	234
	96	$553	719	269	691	899	269
46	**36**	$307	399	177	384	499	177
	42	$345	447	214	431	559	214
	48	$364	472	228	455	589	228
	54	$390	507	229	488	633	229
	60	$418	544	230	522	680	230
	66	$444	578	231	555	721	231
	72	$470	610	232	587	763	232
	78	$497	647	233	620	807	233
	84	$524	681	234	655	851	234
	96	$571	742	269	712	926	269

Layout Studio® Laminate Screen, Desk Up, Performance Rail

GNSDRL
GNSDRU

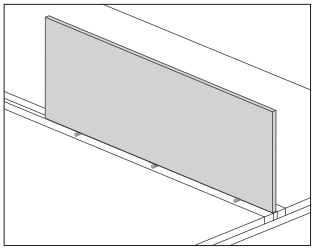

Product Information

Description

This laminate screen attaches to a Layout Studio® performance rail and provides boundary above a surface at the back edge of the work surface. Attachment hardware included.

Notes

Screen width does not need to match performance rail width.

When using 78″-wide performance rail, specify 2 39″-wide screens to provide full screen coverage. When using 84″-wide rail, specify 2 42″-wide screens. When using 96″-wide rail, specify 2 48″-wide screens.

Screen attaches to performance rail with included hardware. No additional hardware is needed.

Screen is shared in back-to-back applications.

To align screens in a run and display name tags, order Ubi nametag clip (Y1121.) separately and place over the seam between laminate screens.

Dimensions

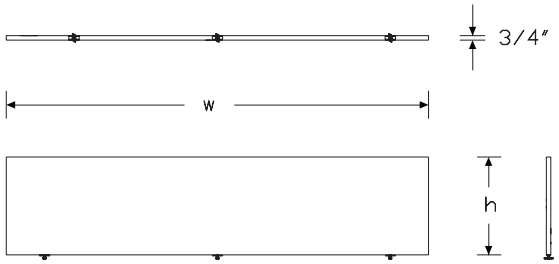

Specification Information

Step 1.

GN A

Step 2. Type

SD desk up A

Step 3. Configuration

R performance rail attachment A

Step 4. Surface Material

L. laminate/thermoplastic edge A
U. laminate/universal edge A

Step 5. Height

42 42″ high A
46 46″ high A

Step 6. Width

36 36″ wide A
39 39″ wide A
42 42″ wide A
48 48″ wide A
54 54″ wide A
60 60″ wide A
66 66″ wide A
72 72″ wide A

Prices for Steps 1-6.

		36	39	42	48	54	60
GNSDRL.	**42**	$215	226	237	248	259	271
	46	$232	243	254	265	277	288

		66	72
GNSDRL.	**42**	$281	291
	46	$298	308

GNSDRU.	**42**	$215	226	237	248	259	271
	46	$232	243	254	265	277	288

		66	72
GNSDRU.	**42**	$281	291
	46	$298	308

Step 7. Grain Direction

For 36" wide (36), 39" wide (39), 42" wide (42), 48" wide (48), 54" wide (54), or 60" wide (60)

VTG	vertical grain A	+$0
HRG	horizontal grain A	+$0

For 66" wide (66) or 72" wide (72)

HRG	horizontal grain A	+$0

Step 8. Surface Finish

76	light brown walnut A	+$0
8Q	folkstone grey A	+$0
91	white A	+$0
98	studio white A	+$0
CL	cool grey neutral A	+$0
HM	natural maple A	+$0
HP	light anigre A	+$0
HX	aged cherry A	+$0
HY	walnut on cherry A	+$0
LA	light ash A	+$0
LBA	clear on ash A	+$0
LBR	phantom ecru A	+$0
LBS	phantom cocoa A	+$0
LBU	medium matte walnut A	+$0
LBV	warm grey teak A	+$0
LBB	oak on ash A	+$0
LBC	walnut on ash A	+$0
LBD	dark brown walnut A	+$0
LBF	neutral twill A	+$0
LBG	sarum twill A	+$0
LBH	earthen twill A	+$0
LBJ	graphite twill A	+$0
LBK	pewter mesh A	+$0
LBL	steel mesh A	+$0
LBM	crisp linen A	+$0
LBN	classic linen A	+$0
LBP	casual linen A	+$0
LBQ	white twill A	+$0
LU	soft white A	+$0
WL	sandstone A	+$0
WN	warm grey neutral A	+$0
X1	chalk white A	+$0

Step 9. Edge Finish

For laminate/thermoplastic edge (L.)

76	light brown walnut A	+$0
8Q	folkstone grey A	+$0
91	white A	+$0
98	studio white A	+$0
BU	black umber A	+$0
CL	cool grey neutral A	+$0
HF	inner tone light A	+$0
HM	natural maple A	+$0
HP	light anigre A	+$0
HX	aged cherry A	+$0
HY	walnut on cherry A	+$0
LA	light ash A	+$0
LBA	clear on ash A	+$0
LBR	phantom ecru A	+$0
LBS	phantom cocoa A	+$0
LBU	medium matte walnut A	+$0
LBV	warm grey teak A	+$0
LBB	oak on ash A	+$0
LBC	walnut on ash A	+$0
LBD	dark brown walnut A	+$0
LBF	neutral twill A	+$0
LBG	sarum twill A	+$0
LBH	earthen twill A	+$0
LBJ	graphite twill A	+$0
LBK	pewter mesh A	+$0
LBL	steel mesh A	+$0
LBM	crisp linen A	+$0
LBN	classic linen A	+$0
LBP	casual linen A	+$0
LBQ	white twill A	+$0
LU	soft white A	+$0
MT	medium tone A	+$0
WL	sandstone A	+$0
WN	warm grey neutral A	+$0

For laminate/universal edge (U.)

PLY	plywood edge A	+$50

Screen - Modesty - Metal, Performance Rail-Attached

GNMRF.

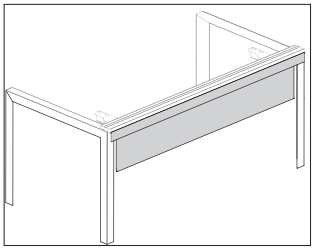

Product Information

Description

This painted metal modesty panel hangs below a single-sided performance rail and includes a painted trim piece that will finish off the back side of the performance rail. Attachment hardware included.

Notes

Width of modesty panel must match width of attached performance rail.

Modesty panel is 9" high. Bottom of panel hangs approximately 11" below the top of the surface.

Dimensions

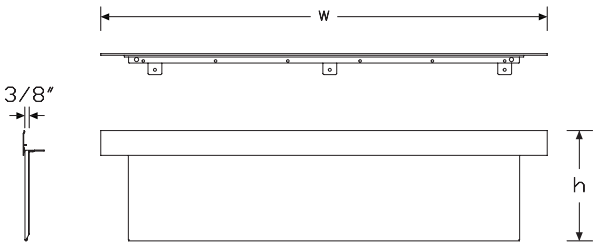

Specification Information

Step 1.

GN A

Step 2. Type

MR performance rail attached A

Step 3. Configuration

F. full module A

Step 4. Height

09 9" tall A

Step 5. Width

42 42" wide A
48 48" wide A
54 54" wide A
60 60" wide A
66 66" wide A
72 72" wide A
78 78" wide A
84 84" wide A
96 96" wide A

Prices for Steps 1-5.

	42	48	54	60	66	72
GNMRF.	**09**	$178	188	199	209	220
230						

	78	84	96
GNMRF.	**09**	$240	251
272			

Step 6. Surface Finish

Metallic Paint

MS metallic silver A +$0

Sand Texture Paint

91 white A +$0
98 studio white A +$0
BK black A +$0
G1 graphite A +$0

Personal Side Screen, Delineation GNSPXT

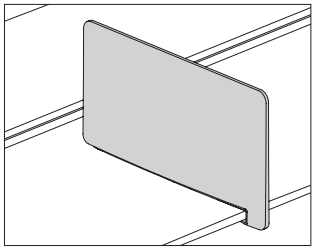

Product Information

Description

This tackable frameless fabric screen provides boundary between workers seated side-by-side, and attaches to the front edge of a squared-edge Layout Studio® surface. It has an edge profile that is complementary to both Pari and flat-edge screens.

Notes

Screen is 13″H × 22″D.

Mid-run (M) screen can be placed anywhere along the front edge of a back-to-back application, except directly above an end leg, or above an intermediate leg on a single-sided application. Screen can be moved by the user.

All fabric is railroaded.

Dimensions

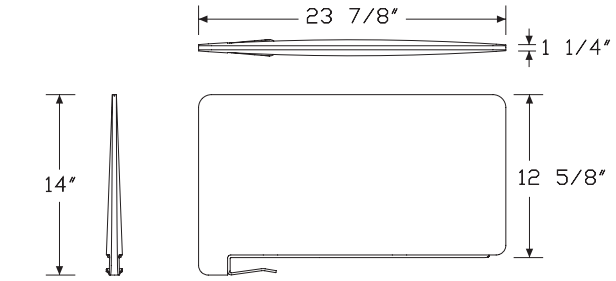

Delineation Mid Screen

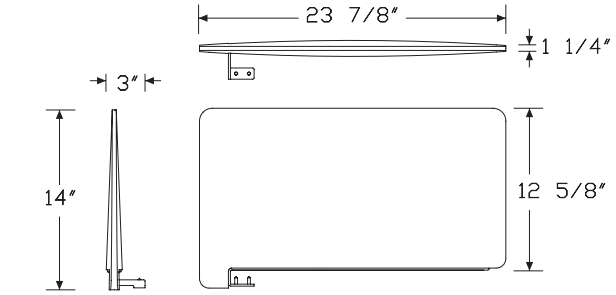

Delineation End Screen, Left

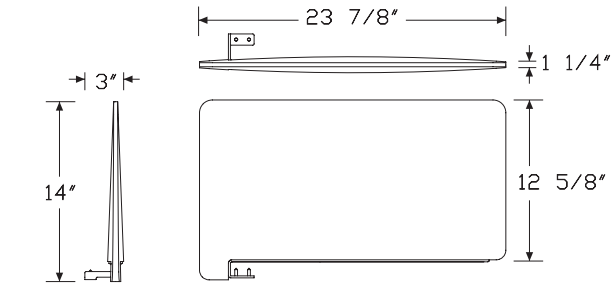

Delineation End Screen, Right

Personal Side Screen, Delineation

continued

Specification Information		
Step 1.		
GN A		
Step 2. Type		
SP	delineation A	
Step 3. Configuration		
XT.	frameless fabric A	
Step 4. Placement		
M	mid-run on back-to-back applications A	
Prices for Steps 1-4.		
GNSPXT. M		$356
Step 5. Bracket Finish		
Metallic Paint		
MS	metallic silver A	+$0
Sand Texture Paint		
91	white A	+$0
98	studio white A	+$0
BK	black A	+$0
G1	graphite A	+$0
Step 6. Surface Finish		
Price Category C		+$0
Price Category 1		+$0
Price Category 2		+$6
Price Category 3		+$10
Price Category 4		+$21

Gallery Panel, Leg-Attached GNSTA.

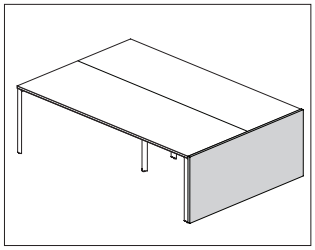

Product Information

Description

This gallery panel attaches to an Engage desk end leg. It has a laminate surface with thermoplastic edge, laminate surface with a thermoplastic backed plywood edge, or veneer surface and edge. Attachment hardware included.

Notes

Top of 29″-high panel aligns with top of a primary surface; top of 42″- and 46″-high panels align with top of a desk up or modesty screen.

All gallery panels are nonhanded. 24″- and 30″-wide panels will work on both right-hand and left-hand single desk end legs.

Grain/pattern direction is vertical for veneer, wood grain laminates, and directional laminates.

Wood grain and directional laminates are available only in 24″-60″ widths.

Dimensions

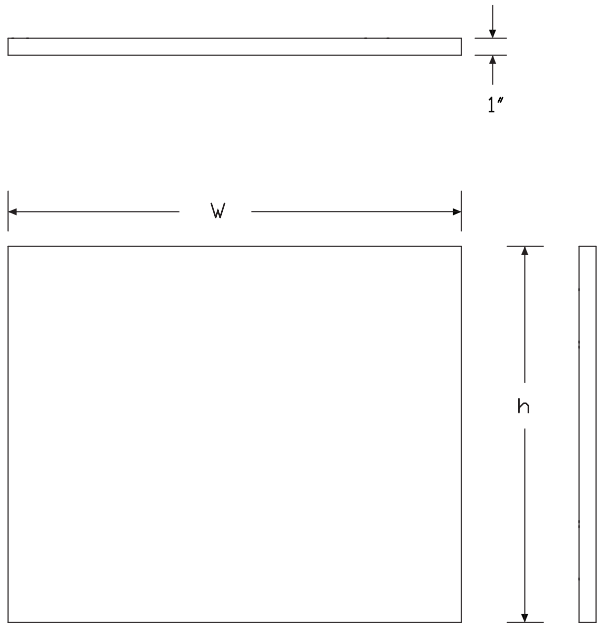

Specification Information

Step 1.

GN

Step 2. Type

ST gallery panel

Step 3. Configuration

A. leg-attached

Step 4. Height

29 29″ high
42 42″ high
46 46″ high

Step 5. Width

24 24″ wide
30 30″ wide
36 36″ wide
48 48″ wide
60 60″ wide
72 72″ wide

Step 6. Surface Material

L laminate top/thermoplastic edge
W veneer
U laminate top/universal edge

Prices for Steps 1-6.

			L	W	U
GNSTA.	**29**	**24**	$241	528	241
		30	$266	582	266
		36	$289	632	289
		48	$376	826	376
		60	$465	1022	465
		72	$555	1219	555
	42	**24**	$284	622	284
		30	$304	668	304
		36	$335	735	335
		48	$453	992	453
		60	$560	1229	560
		72	$669	1466	669

46	**24**	$292	638	292
	30	$314	691	314
	36	$359	787	359
	48	$472	1036	472
	60	$588	1290	588
	72	$700	1539	700

Step 7. Surface Finish

For 24" wide (24), 30" wide (30), 36" wide (36), 48" wide (48), or 60" wide (60) with laminate top/thermoplastic edge (L), or laminate top/universal edge (U)

38	twilight	+$0
39	desert	+$0
76	light brown walnut	+$0
91	white	+$0
98	studio white	+$0
8Q	folkstone grey	+$0
CL	cool grey neutral	+$0
HF	inner tone light	+$0
HM	natural maple	+$0
HP	light anigre	+$0
HT	inner tone	+$0
HX	aged cherry	+$0
HY	walnut on cherry	+$0
LA	light ash	+$0
LBA	clear on ash	+$0
LBR	phantom ecru	+$0
LBS	phantom cocoa	+$0
LBU	medium matte walnut	+$0
LBV	warm grey teak	+$0
LBB	oak on ash	+$0
LBC	walnut on ash	+$0
LBD	dark brown walnut	+$0
LBF	neutral twill	+$0
LBG	sarum twill	+$0
LBH	earthen twill	+$0
LBJ	graphite twill	+$0
LBM	crisp linen	+$0
LBN	classic linen	+$0
LBP	casual linen	+$0
LBQ	white twill	+$0
LU	soft white	+$0
WL	sandstone	+$0
WN	warm grey neutral	+$0

Wood Veneer

For veneer (W)

2U	light brown walnut	+$55
40	dark brown walnut	+$55
ET	clear on ash	+$55
EU	oak on ash	+$55
EV	walnut on ash	+$55

Solid-Color Laminate Top/Thermoplastic Edge

For 72" wide (72) with laminate top/thermoplastic edge (L), or laminate top/universal edge (U)

8Q	folkstone grey	+$0
91	white	+$0
98	studio white	+$0
MT	medium tone	+$0
WL	sandstone	+$0
WN	warm grey neutral	+$0

Step 8. Bracket Finish

Metallic Paint

MS	metallic silver	+$0

Sand Texture Paint

91	white	+$0
98	studio white	+$0
BK	black	+$0
G1	graphite	+$0

Gallery Panel, Leg-Attached

continued

Step 9. Edge Finish		
For 24" wide (24), 30" wide (30), 36" wide (36), 48" wide (48), 60" wide (60), or 72" wide (72) with laminate top/thermoplastic edge (L)		
76	light brown walnut	+$0
8Q	folkstone grey	+$0
91	white	+$0
98	studio white	+$0
CL	cool grey neutral	+$0
HF	inner tone light	+$0
HM	natural maple	+$0
HP	light anigre	+$0
HT	inner tone	+$0
HX	aged cherry	+$0
HY	walnut on cherry	+$0
LA	light ash	+$0
LBA	clear on ash	+$0
LBR	phantom ecru	+$0
LBS	phantom cocoa	+$0
LBU	medium matte walnut	+$0
LBV	warm grey teak	+$0
LBB	oak on ash	+$0
LBC	walnut on ash	+$0
LBD	dark brown walnut	+$0
LBF	neutral twill	+$0
LBG	sarum twill	+$0
LBH	earthen twill	+$0
LBJ	graphite twill	+$0
LBK	pewter mesh	+$0
LBL	steel mesh	+$0
LBM	crisp linen	+$0
LBN	classic linen	+$0
LBP	casual linen	+$0
LBQ	white twill	+$0
LU	soft white	+$0
WL	sandstone	+$0
WN	warm grey neutral	+$0
For laminate top/universal edge (U)		
PLY	plywood edge [A]	+$50

Pari Screen, End of Run GNSFXT

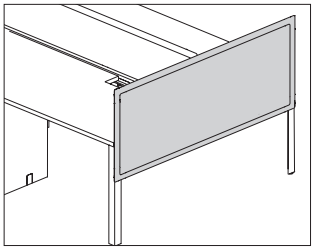

Product Information

Description

This tackable frameless fabric screen attaches to the outside of a Layout Studio® double end leg and provides boundary above and slightly below a surface at the end of a bench or table. Attachment hardware included.

Notes

Screens attach to Layout Studio infrastructure with included hardware; no additional attaching hardware is required.

Screen width must match the depth of leg next to which it will be placed.

All fabric is railroaded.

Screen accepts Customer's Own Material (COM). Yardage is estimated for nondirectional 54"-wide fabrics.

Width—Yardage

48—1.75

60—2.10

For information on multiple quantities or directional fabrics, contact COM Department. See Order Information in Appendices.

Dimensions

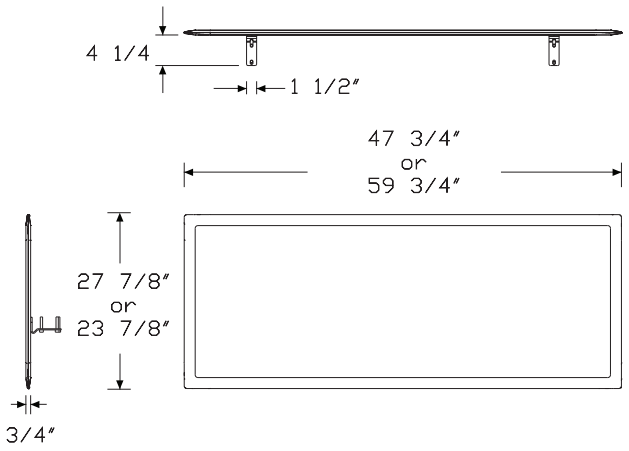

Specification Information

Step 1.

GNSFXT. A

Step 2. Height

42	42" high	A
46	46" high	A

Step 3. Width

48	48" wide	A
60	60" wide	A

Prices for Steps 1-3.

		48	**60**
GNSFXT.	**42**	$650	724
	46	$714	797

Step 4. Bracket Finish

Metallic Paint

MS	metallic silver A	+$0

Sand Texture Paint

91	white A	+$0
98	studio white A	+$0
BK	black A	+$0
G1	graphite A	+$0

Step 5. Surface Finish

Price Category C	+$86
Price Category 1	+$0
Price Category 2	+$15
Price Category 3	+$34
Price Category 4	+$58
Price Category E	+$131

Flat Edge Screen, End of Run GNSFXS

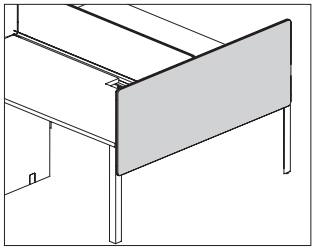

Product Information

Description

This tackable frameless fabric screen attaches to the outside of a Layout Studio® double end leg and provides boundary above and slightly below a surface at the end of a bench or table. Attachment hardware included.

Notes

Screens attach to Layout Studio infrastructure with included hardware; no additional attaching hardware is required.

Screen width must match the depth of leg next to which it will be placed.

All fabric is railroaded.

Screen accepts Customer's Own Material (COM). Yardage is estimated for nondirectional 54"-wide fabrics.

Width—Yardage

48—1.75

60—2.10

For information on multiple quantities or directional fabrics, contact COM Department. See Order Information in Appendices.

Dimensions

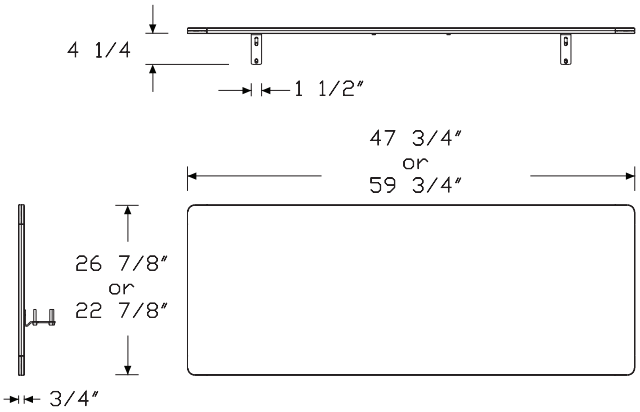

Specification Information

Step 1.

GNSFXS. A

Step 2. Height

42 42" high A

46 46" high A

Step 3. Width

48 48" wide A

60 60" wide A

Prices for Steps 1-3.

		48	60
GNSFXS.	**42**	$405	507
	46	$456	557

Step 4. Bracket Finish

Metallic Paint

MS	metallic silver A	+$0

Sand Texture Paint

91	white A	+$0
98	studio white A	+$0
BK	black A	+$0
G1	graphite A	+$0

Step 5. Surface Finish

Price Category C	+$85
Price Category 1	+$0
Price Category 2	+$15
Price Category 3	+$34
Price Category 4	+$58
Price Category E	+$131

Pari Screen, Delineation, Performance Rail

GNSPXP

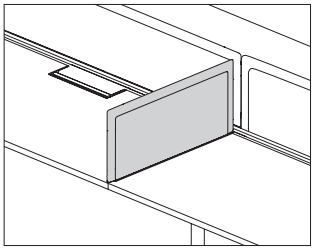

Product Information

Description

This tackable fabric screen provides boundary between workers seated side-by-side, and attaches to a squared-edge Layout Studio® surface when a performance rail is used.

Notes

All fabric is railroaded.

For screen attachment in middle of run, use either left-hand bracket (GNSD.PRxxEL) or right-hand bracket (GNSD.PRxxER), ordered separately.

Screen accepts Customer's Own Material (COM). Yardage is estimated for nondirectional 54"-wide fabrics.

Width—Yardage

24—0.92

30—1.10

For information on multiple quantities or directional fabrics, contact COM Department. See Order Information in Appendices.

Dimensions

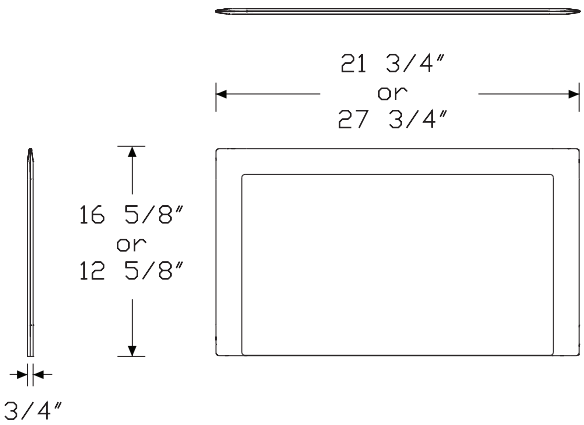

Specification Information

Step 1.

GNSPXP.R A

Step 2. Height

42 42" high A

46 46" high A

Step 3. Width

24 24" wide A

30 30" wide A

Step 4. Location

EL end-of-run, left-hand A

ER end-of-run, right-hand A

Prices for Steps 1-4.

		EL	ER
GNSPXP.R 42	**24**	$487	487
	30	$503	503
46	**24**	$513	513
	30	$532	532

Step 5. Bracket Finish

MS	metallic silver A	+$0

Step 6. Surface Finish

Price Category E	+$0
Price Category C	+$48
Price Category 1	+$0
Price Category 2	+$8
Price Category 3	+$19
Price Category 4	+$32

Flat Edge Screen, Delineation, Performance Rail — GNSPXS

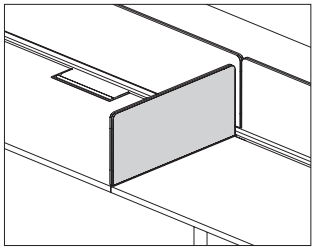

Product Information

Description

This tackable fabric screen provides boundary between workers seated side-by-side, and attaches to a squared-edge Layout Studio® surface when a performance rail is used.

Notes

All fabric is railroaded.

For screen attachment in middle of run, use either left-hand bracket (GNSD.SRxxEL) or right-hand bracket (GNSD.SRxxER), ordered separately.

Screen accepts Customer's Own Material (COM). Yardage is estimated for nondirectional 54"-wide fabrics.

Width—Yardage

24—0.92

30—1.10

For information on multiple quantities or directional fabrics, contact COM Department. See Order Information in Appendices.

Dimensions

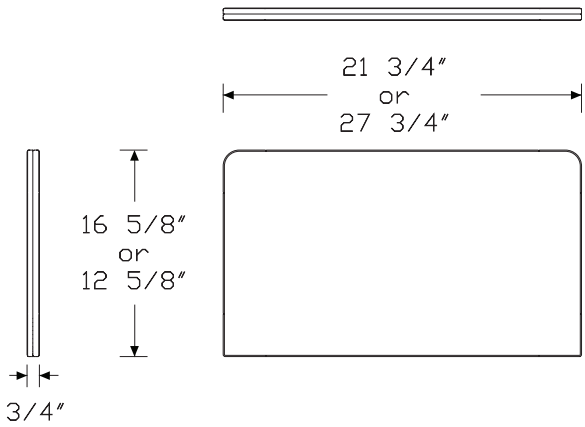

Specification Information

Step 1.

GNSPXS.R A

Step 2. Height

42 42" high A

46 46" high A

Step 3. Width

24 24" wide A

30 30" wide A

Step 4. Location

EL end-of-run, left-hand A

ER end-of-run, right-hand A

Prices for Steps 1-4.

		EL	ER
GNSPXS.R 42	**24**	$312	312
	30	$338	338
46	**24**	$338	338
	30	$368	368

Step 5. Bracket Finish

MS metallic silver A +$0

Step 6. Surface Finish

Price Category C	+$45
Price Category 1	+$0
Price Category 2	+$6
Price Category 3	+$10
Price Category 4	+$21
Price Category E	+$0

Screen Bracket, Delineation, Pari or Flat Edge GNSD.

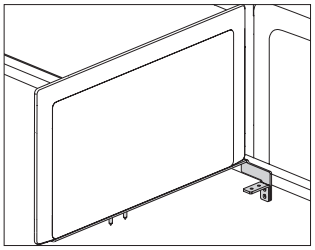

Product Information

Description

This hardware converts a Pari or flat edge delineation screen from left-hand or right-hand attachment to the opposite attachment.

Notes

For screen attachment in middle of run, use either left-hand (EL) or right-hand (ER) bracket.

Order Pari or flat edge delineation screen (GNSPXP., GNSPXP.R, GNSPXS., GNSPXS.R) separately.

Dimensions

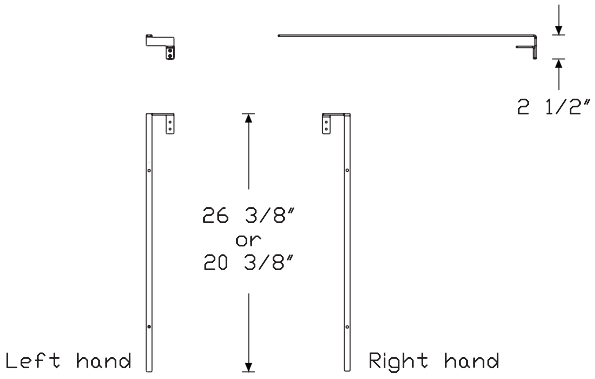

Pari screen with performance rail

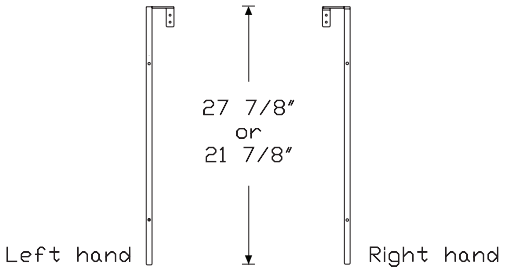

Flat edge screen with performance rail

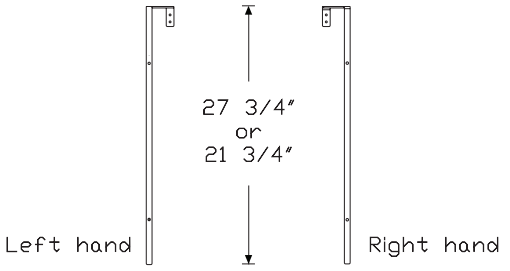

Pari screen, no performance rail

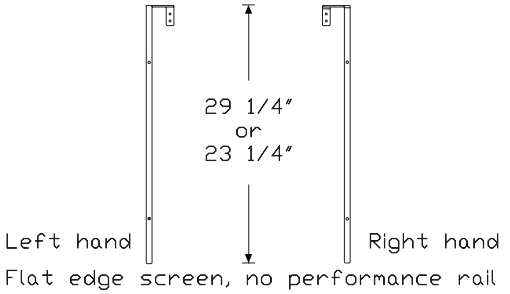

Flat edge screen, no performance rail

Screen Bracket, Delineation, Pari or Flat Edge *continued*

Specification Information

Step 1.

GN A

Step 2. Type

SD.P Pari delineation screen bracket A

SD.S flat edge delineation screen bracket A

Step 3. Performance Rail

R performance rail A

N no performance rail A

Step 4. Depth

24 24" wide A

30 30" wide A

Step 5. Location

EL end-of-run, left-hand A

ER end-of-run, right-hand A

Prices for Steps 1-5.

			EL	ER
GNSD.P	**R**	**24**	$55	55
		30	$55	55
	N	**24**	$55	55
		30	$55	55

			EL	ER
GNSD.S	**R**	**24**	$55	55
		30	$55	55
	N	**24**	$55	55
		30	$55	55

Step 6. Bracket Finish

MS metallic silver A +$0

Individual Cubby L2EC.

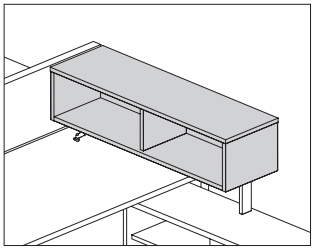

Product Information

Description

This all laminate or veneer cubby attaches to stanchions and provides open storage accessible from 1 side of the cubby. The inbound stanchion either sits on top of a work surface and attaches to the underside of the surface, or attaches to a Layout Studio® performance rail. The outbound stanchion rests on top of a 22"-high Tu® Wood credenza.

Notes

Surface-attached cubby cannot be used on a Layout Studio sliding surface.

Order stanchion kit for surface attachment (LSS.) or Layout Studio performance rail attachment (L2SS.) separately.

Can be used only in perpendicular application.

Order optional accessories separately:

- Tackboard (LLCT.)
- Whiteboard (LLCW.)
- Magnet board (LLCM.)

Dimensions

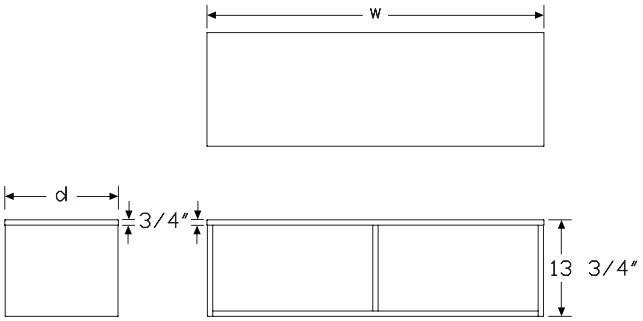

Specification Information

Step 1.

L2EC.

Step 2. Attachment

R Layout Studio performance rail attachment

S surface attachment

Step 3. Height

09 9.75" high

13 13.75" high

Step 4. Width

For Layout Studio performance rail attachment (R)

36 36" wide

42 42" wide

48 48" wide

For surface attachment (S)

48 48" wide

60 60" wide

Step 5. Depth

12 12 1/2" deep

Step 6. Surface Material

L laminate

V veneer

Prices for Steps 1-6.

			3612L	3612V	4212L	4212V	6012L	6012V
L2EC.	**R**	**09**	$941	1809	996	1964	—	—
		13	$996	1861	1052	2016	—	—
	S	**09**	—	—	—	—	$1162	2223
		13	—	—	—	—	$1217	2274

			4812L	4812V
L2EC.	**R**	**09**	$1052	2016
		13	$1106	2068
	S	**09**	$1052	2016
		13	$1106	2068

Step 7. Case Finish

For laminate (L)

8Q	folkstone grey	+$0
91	white	+$0
98	studio white	+$0
CL	cool grey neutral	+$0
LU	soft white	+$0
WL	sandstone	+$0
WN	warm grey neutral	+$0

For laminate (L)

LBM	crisp linen	+$0
LBN	classic linen	+$0
LBP	casual linen	+$0

For laminate (L)

LBK	pewter mesh	+$0
LBL	steel mesh	+$0

For laminate (L)

LBF	neutral twill	+$0
LBG	sarum twill	+$0
LBH	earthen twill	+$0
LBJ	graphite twill	+$0
LBQ	white twill	+$0

For laminate (L)

76	light brown walnut	+$0
HM	natural maple	+$0
HP	light anigre	+$0
HX	aged cherry	+$0
HY	walnut on cherry	+$0
LBA	clear on ash	+$0
LBR	phantom ecru	+$0
LBS	phantom cocoa	+$0
LBU	medium matte walnut	+$0
LBV	warm grey teak	+$0
LBB	oak on ash	+$0
LBC	walnut on ash	+$0
LBD	dark brown walnut	+$0

For veneer (V)

2U	light brown walnut	+$85
40	dark brown walnut	+$85
ED	aged cherry	+$85
EK	medium red walnut	+$85
ET	clear on ash	+$85
EU	oak on ash	+$85
EV	walnut on ash	+$85
EW	medium matte walnut	+$85
UL	natural maple	+$85
UX	walnut on cherry	+$85

Shared Cubby L2EY.

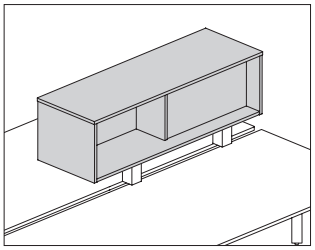

Product Information

Description

This all-laminate or veneer cubby has alternate-facing openings to provide storage to workers on both sides of the unit, either across from each other or side-by-side. Cubby is mounted using stanchions which are specified separately.

Notes

12½"-deep cubby used in a parallel application will attach to Layout Studio® beams. Single cubby requires 1 end stanchion kit (LSS.SE). Multiple cubbies will require the end stanchion kit, along with a shared stanchion (LSS.SM) wherever 2 cubbies meet.

12½"-deep cubby used in a perpendicular application will attach to the back edge of a work surface on one end of the cubby and rest on top of a 22"-high credenza on the other end of the cubby. Specify 1 credenza/work surface mounted stanchion kit (LSS.CD) for each cubby.

16"-deep cubby is 12" deep on half and 3" deep on the other half.

Only attaches to Layout Studio performance rail. To attach to performance rail, order stanchion kits (L2SS.) separately.

For 16" deep cubby, 24"-wide and 30"-wide cubbies can only be used in a parallel application. 36"-72" wide cubbies can be used in either a parallel or perpendicular application.

To cover interior septum on 1 side of 16"D × 13½"H cubby (L2EY.x1613xx) with a painted insert, order insert (LLCM.Z13xxP) separately.

Dimensions

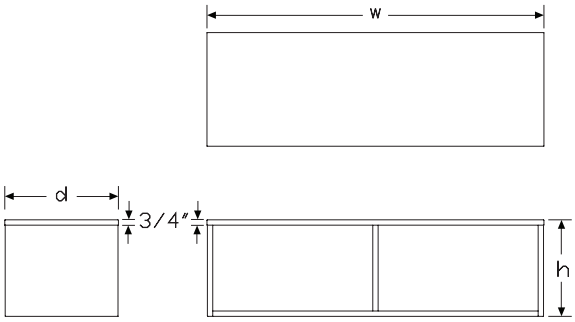

Specification Information

Step 1.

L2EY.

Step 2. Attachment

B parallel application, Layout Studio beam attachment
S perpendicular application, surface attachment
R Layout Studio performance rail attachment

Step 3. Depth

For parallel application, Layout Studio beam attachment (B) or perpendicular application, surface attachment (S)

12 12.5" deep

For Layout Studio performance rail attachment (R)

16 16" deep

Step 4. Height

For 12.5" deep (12)

09 9.75" high
13 13.75" high

For 16" deep (16)

13 13.75" high

Step 5. Width

For Layout Studio performance rail attachment (R)

24 24" wide
30 30" wide
36 36" wide
42 42" wide
48 48" wide

For perpendicular application, surface attachment (S)

48 48" wide
60 60" wide

For parallel application, Layout Studio beam attachment (B)

36 36" wide
42 42" wide
48 48" wide
60 60" wide
72 72" wide

Step 6. Position	
L	opening left
R	opening right

Step 7. Surface Material	
L	laminate
V	veneer

Prices for Steps 1-7.

			0936LL	0936LV	0936RL	0936RV	0942LL	0942LV
L2EY.	**B**	**12**	$891	1763	891	1763	1001	1970

			0942RL	0942RV	0960LL	0960LV	0960RL	0960RV
L2EY.	**B**	**12**	$1001	1970	1187	2247	1187	2247
	S	**12**	—	—	$1187	2247	1187	2247

			0948LL	0948LV	0948RL	0948RV	0972LL	0972LV
L2EY.	**B**	**12**	$1049	2014	1049	2014	1325	2479
	S	**12**	$1059	2014	1059	2014	—	—

			0972RL	0972RV	1324LL	1324LV	1324RL	1324RV
L2EY.	**B**	**12**	$1325	2479	—	—	—	—
	R	**16**	—	—	$894	1758	885	1758

			1330LL	1330LV	1330RL	1330RV	1336LL	1336LV
L2EY.	**B**	**12**	—	—	—	—	$941	1809
	R	**16**	$1005	1861	996	1861	1116	1964

			1336RL	1336RV	1342LL	1342LV	1342RL	1342RV
L2EY.	**B**	**12**	$941	1809	1052	2016	1052	2016
	R	**16**	$1116	1964	1229	2171	1229	2171

			1360LL	1360LV	1360RL	1360RV	1348LL	1348LV
L2EY.	**B**	**12**	$1237	2293	1237	2293	1099	2061
	S	**12**	$1237	2293	1248	2293	1108	2061
	R	**16**	—	—	—	—	$1340	2274

			1348RL	1348RV	1372LL	1372LV	1372RL	1372RV
L2EY.	**B**	**12**	$1099	2061	1388	2526	1388	2526
	S	**12**	$1108	2061	—	—	—	—
	R	**16**	$1340	2274	—	—	—	—

Step 8. Case Finish		
For laminate (L)		
LBM	crisp linen	+$0
LBN	classic linen	+$0
LBP	casual linen	+$0
For laminate (L)		
LBK	pewter mesh	+$0
LBL	steel mesh	+$0
For laminate (L)		
8Q	folkstone grey	+$0
91	white	+$0
98	studio white	+$0
CL	cool grey neutral	+$0
LU	soft white	+$0
WL	sandstone	+$0
WN	warm grey neutral	+$0
For laminate (L)		
LBF	neutral twill	+$0
LBG	sarum twill	+$0
LBH	earthen twill	+$0
LBJ	graphite twill	+$0
LBQ	white twill	+$0
For laminate (L)		
76	light brown walnut	+$0
HM	natural maple	+$0
HP	light anigre	+$0
HX	aged cherry	+$0
HY	walnut on cherry	+$0
LBA	clear on ash	+$0
LBR	phantom ecru	+$0
LBS	phantom cocoa	+$0
LBU	medium matte walnut	+$0
LBV	warm grey teak	+$0
LBB	oak on ash	+$0
LBC	walnut on ash	+$0
LBD	dark brown walnut	+$0

For veneer (V)		
2U	light brown walnut	+$85
40	dark brown walnut	+$85
ED	aged cherry	+$85
EK	medium red walnut	+$85
ET	clear on ash	+$85
EU	oak on ash	+$85
EV	walnut on ash	+$85
EW	medium matte walnut	+$85
UL	natural maple	+$85
UX	walnut on cherry	+$85

Suspended End Cubby L2ES.

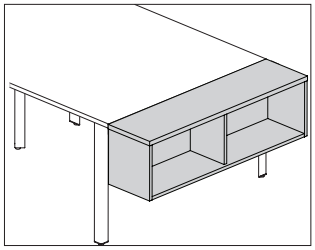

Product Information

Description

This all laminate or veneer cubby attaches to the outside of a Layout Studio® double desk end leg and provides open storage. The top of the cubby aligns with the adjacent surface(s). Each cubby has a center divider.

Notes

Specify cubby width to match depth of leg to which it will attach.

Order hardware kit (LSH.B) separately.

Grain direction is vertical on front and sides, and horizontal on top and back. Vertical grain direction on the top is available via Made-to-Measure or the Vary Easy Program.

Dimensions

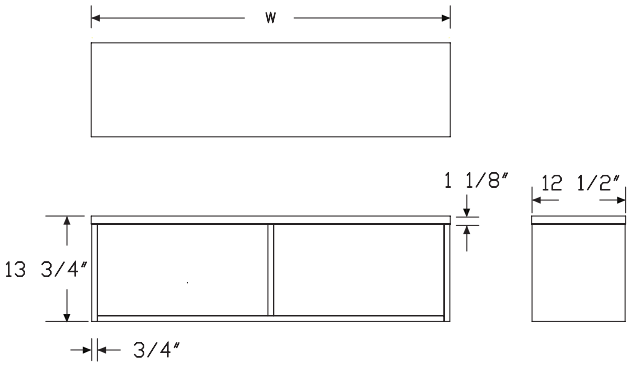

Specification Information

Step 1.

L2ES.

Step 2. Application

B suspended below surface

Step 3. Height

13 13.75" high

Step 4. Width

48 48" wide

60 60" wide

Step 5. Depth

12 12.5" deep

Step 6. Surface Material

L laminate

V veneer

Prices for Steps 1-6.

	4812L	4812V	6012L	6012V
L2ES. B 13	$1116	2068	1229	2274

Step 7. Top Finish

Solid-Color Laminate

For laminate (L)

8Q	folkstone grey	+$0
91	white	+$0
98	studio white	+$0
CL	cool grey neutral	+$0
LU	soft white	+$0
MT	medium tone	+$0
WL	sandstone	+$0
WN	warm grey neutral	+$0

Linen Laminate

For laminate (L)

LBM	crisp linen	+$0
LBN	classic linen	+$0
LBP	casual linen	+$0

Mesh Laminate

For laminate (L)

LBK	pewter mesh	+$0
LBL	steel mesh	+$0

Twill Laminate

For laminate (L)

LBF	neutral twill	+$0
LBG	sarum twill	+$0
LBH	earthen twill	+$0
LBJ	graphite twill	+$0
LBQ	white twill	+$0

Wood-Grain Laminate

For laminate (L)

76	light brown walnut	+$0
HM	natural maple	+$0
HP	light anigre	+$0
HX	aged cherry	+$0
HY	walnut on cherry	+$0
LBA	clear on ash	+$0
LBR	phantom ecru	+$0
LBS	phantom cocoa	+$0
LBU	medium matte walnut	+$0
LBV	warm grey teak	+$0
LBB	oak on ash	+$0
LBC	walnut on ash	+$0
LBD	dark brown walnut	+$0

For veneer (V)

2U	light brown walnut	+$85
40	dark brown walnut	+$85
ED	aged cherry	+$85
EK	medium red walnut	+$85
ET	clear on ash	+$85
EU	oak on ash	+$85
EV	walnut on ash	+$85
EW	medium matte walnut	+$85
UL	natural maple	+$85
UX	walnut on cherry	+$85

Step 8. Case Finish

Solid-Color Laminate

For laminate (L)

8Q	folkstone grey	+$0
91	white	+$0
98	studio white	+$0
CL	cool grey neutral	+$0
LU	soft white	+$0
MT	medium tone	+$0
WL	sandstone	+$0
WN	warm grey neutral	+$0

Low Sheen Finishes

For laminate (L)

LBM	crisp linen	+$0
LBN	classic linen	+$0
LBP	casual linen	+$0

Mesh Laminate

For laminate (L)

LBK	pewter mesh	+$0
LBL	steel mesh	+$0

Twill Laminate

For laminate (L)

LBF	neutral twill	+$0
LBG	sarum twill	+$0
LBH	earthen twill	+$0
LBJ	graphite twill	+$0
LBQ	white twill	+$0

Wood-Grain Laminate

For laminate (L)

76	light brown walnut	+$0
HM	natural maple	+$0
HP	light anigre	+$0
HX	aged cherry	+$0
HY	walnut on cherry	+$0
LBA	clear on ash	+$0
LBR	phantom ecru	+$0
LBS	phantom cocoa	+$0
LBU	medium matte walnut	+$0
LBV	warm grey teak	+$0
LBB	oak on ash	+$0
LBC	walnut on ash	+$0
LBD	dark brown walnut	+$0

For veneer (V)		
2U	light brown walnut	+$85
40	dark brown walnut	+$85
ED	aged cherry	+$85
EK	medium red walnut	+$85
ET	clear on ash	+$85
EU	oak on ash	+$85
EV	walnut on ash	+$85
EW	medium matte walnut	+$85
UL	natural maple	+$85
UX	walnut on cherry	+$85

Stanchion Kit, Performance Rail L2SS.

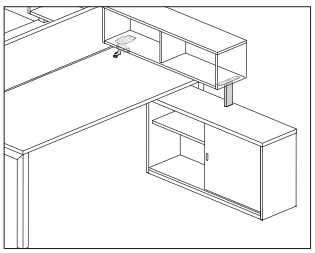

Product Information

Description

These stanchions elevate and support the shared cubby and individual cubby when attaching to a Layout Studio® performance rail. The center application kit has 1 stanchion, and the perpendicular application kit has 2 stanchions. Attachment hardware included.

Notes

Specify cubby (L2EY., L2EC.) separately.

The center application, rail-attached end stanchion (CE) supports 1 end of a single cubby.

The center application, rail-attached shared stanchion (CS) supports the end of 2 cubbies that are placed side-by-side.

The perpendicular application, rail and credenza supported stanchion kit (PRC) supports both ends of a cubby when placed perpendicular to a bench.

Dimensions

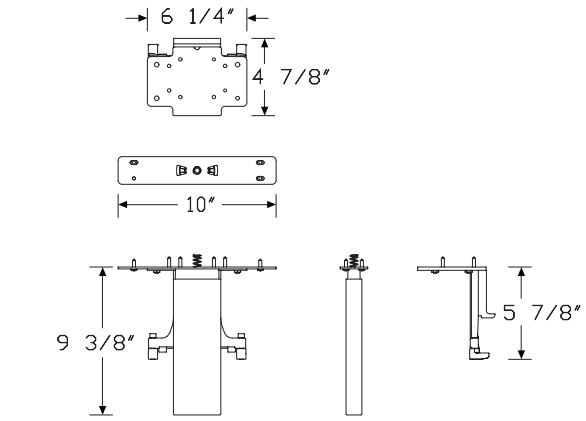

Perpendicular Rail and Credenza Support

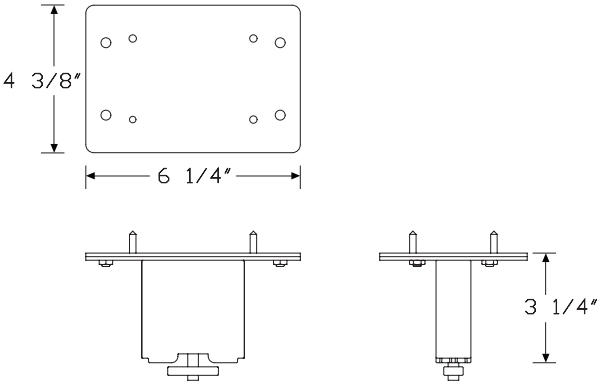

End Center Rail

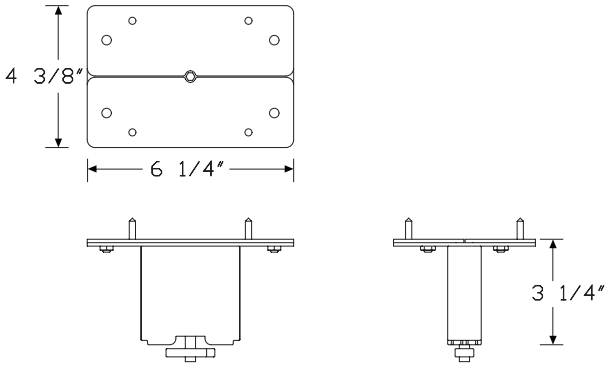

Shared Center Rail

Stanchion Kit, Performance Rail

continued

Specification Information		
Step 1.		
L2SS.		
Step 2. Application		
CE	center application, rail-attached, end	
CS	center application, rail-attached, shared	
PRC	perpendicular application, rail and credenza supported	
Prices for Steps 1-2.		
L2SS.	**CE**	$218
	CS	$222
	PRC	$570
Step 3. Finish		
Metallic Paint		
MS	metallic silver	+$0
Sand Texture Paint		
91	white	+$0
BK	black	+$0
G1	graphite	+$0
Smooth Paint		
98	studio white	+$0

Suspended End Cubby Hardware Kit LSH.

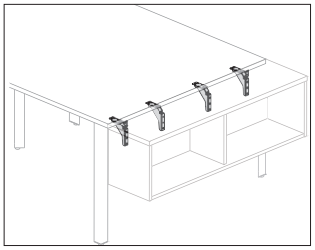

Product Information

Description

This hardware kit attaches a suspended end cubby to the outside of a Layout Studio® double desk end leg.

Notes

Order suspended end cubby (L2ES.B) separately.

Dimensions

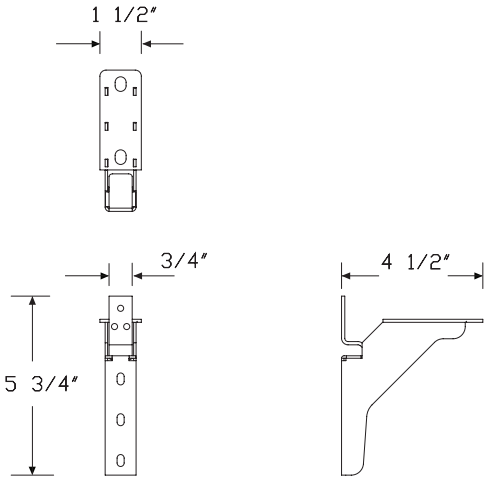

Specification Information

Step 1.

LSH. A

Step 2. Application

B	suspended below surface A	

Prices for Steps 1-2.

LSH.	**B**	$371

Step 3. Finish

Metallic Paint

MS	metallic silver A	+$0

Sand Texture Paint

91	white A	+$0
BK	black A	+$0
G1	graphite A	+$0

Smooth Paint

98	studio white A	+$0

Storage Attachment Kit, End Leg L2SL.

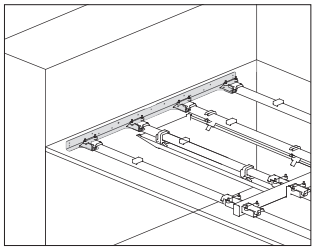

Product Information

Description

This hardware kit attaches Layout Studio® beams to a Tu® Wood end-of-run storage unit to allow the storage unit to replace a Layout Studio double end leg. The kit is available for use with a 48"-wide or a 60"-wide freestanding storage case. Finish is cool grey neutral.

Notes

To replace a Layout Studio double leg with a storage unit, order a Tu Wood end-of-run cabinet (L2ER.) separately.

Specify storage base option to match base option on storage unit.

Dimensions

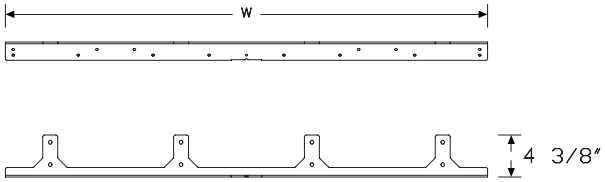

Specification Information

Step 1.

L2SL. A

Step 2. Depth

48	48" double end leg A	
60	60" double end leg A	

Prices for Steps 1-2.

L2SL.	**48**	$347
	60	$374

Step 3. Storage Base Option

1	base A	+$0
3	base with fronts to floor A	+$0
5	foot A	+$0
9	c-foot A	+$0

Shared Cubby Insert LLCM.

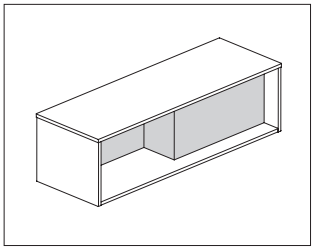

Product Information

Description

This painted metal insert is placed inside a 16"-deep shared cubby to completely cover the laminate septum on 1 side of the cubby. Attachment hardware included.

Notes

To cover both sides of a shared cubby septum, specify 2 inserts.

Paint finish is smooth.

Dimensions

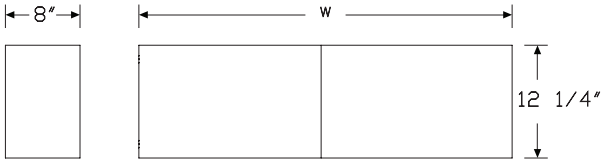

Specification Information

Step 1.

LLCM. A

Step 2. Type

Z 16" deep shared cubby insert A

Step 3. Height

13 13.75" high A

Step 4. Width

24 24" wide A
30 30" wide A
36 36" wide A
42 42" wide A
48 48" wide A

Step 5. Surface Material

P painted metal A

Prices for Steps 1-5.

	24P	30P	36P	42P	48P
LLCM. Z 13	$261	278	294	310	326

Step 6. Finish

Metallic Paint

CN metallic champagne A +$0
MS metallic silver A +$0

Sand Texture Paint

BK black A +$0

Smooth Paint

8Q folkstone grey A +$0
91 white A +$0
98 studio white A +$0
G1 graphite A +$0
WL sandstone A +$0

Engage Leg, Desk End, Single

GNLFEL
GNLFER

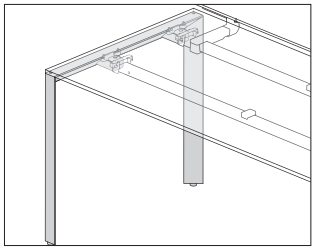

Product Information

Description

These single desk end legs provide support for individual tables or the ends of single-sided benches and returns. These fixed height legs provide 1¾″ of leveling adjustment.

Notes

Size of legs must match the depth of the surface being supported.

Dimensions

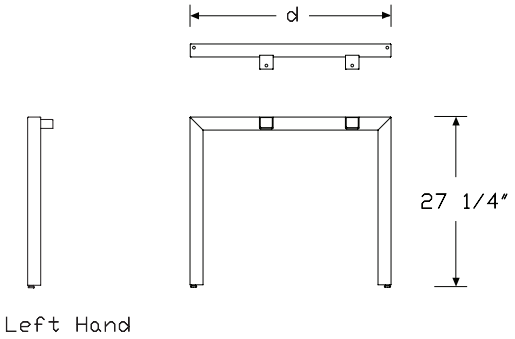

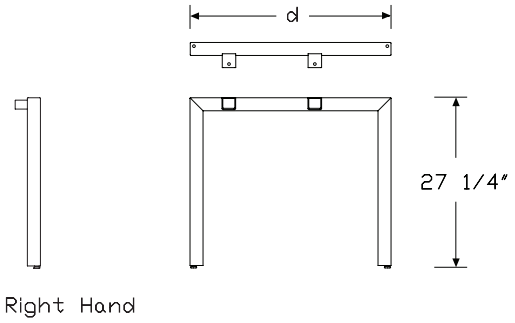

Specification Information

Step 1.

GN

Step 2. Leg Type

LF	fixed height

Step 3. Application

EL.	left hand
ER.	right hand

Step 4. Depth

24	24″ deep
30	30″ deep
36	36″ deep

Prices for Steps 1-4.

GNLFEL.	**24**	$282
	30	$286
	36	$290
GNLFER.	**24**	$282
	30	$286
	36	$290

Step 5. Leg Finish

MS	metallic silver	+$0
91	white	+$0
98	studio white	+$0
BK	black	+$0
G1	graphite	+$0

Engage Leg, Desk End, Double GNLFEN

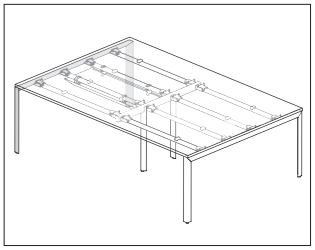

Product Information

Description

The double desk end leg provides support at either end of a back-to-back bench application, or a project table. This fixed height leg provides 1 3/4″ of leveling adjustment.

Notes

Size of the leg must match the combined depth of the 2 primary surfaces or 1 project table surface being supported.

Dimensions

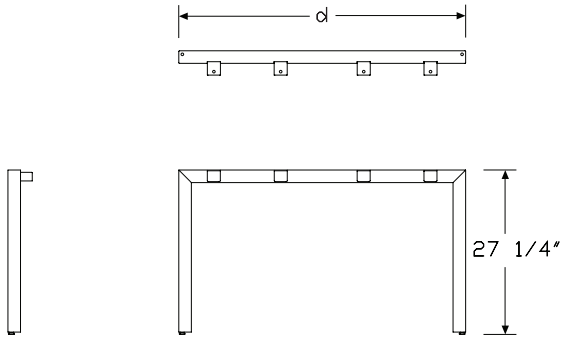

Specification Information

Step 1.

GN

Step 2. Leg Type

LF	fixed height

Step 3. Application

EN.	desk end double

Step 4. Depth

48	48″ deep
60	60″ deep
72	72″ deep

Prices for Steps 1-4.

GNLFEN.	**48**	$374
	60	$397
	72	$420

Step 5. Leg Finish

Metallic Paint

MS	metallic silver	+$0

Sand Texture Paint

91	white	+$0
98	studio white	+$0
BK	black	+$0
G1	graphite	+$0

Engage Leg, Intermediate Desk GNLFSN

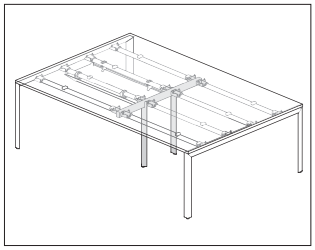

Product Information

Description

The intermediate desk leg provides support within single-sided, back-to-back bench or project table applications. This fixed height leg provides 1 3/4" of leveling adjustment.

Notes

Size of the leg must match the depth of the surfaces being supported.

Dimensions

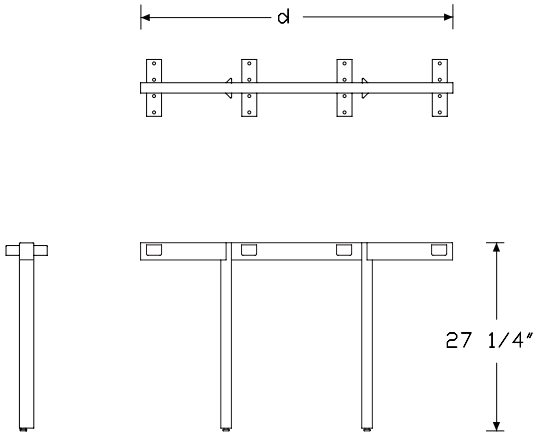

Specification Information

Step 1.

GN

Step 2. Leg Type

LF	fixed height

Step 3. Application

SN.	intermediate desk

Step 4. Depth

24	24" deep
30	30" deep
36	36" deep
48	48" deep
60	60" deep
72	72" deep

Prices for Steps 1-4.

GNLFSN.	**24**	$307
	30	$312
	36	$318
	48	$392
	60	$408
	72	$420

Step 5. Leg Finish

Metallic Paint

MS	metallic silver	+$0

Sand Texture Paint

91	white	+$0
98	studio white	+$0
BK	black	+$0
G1	graphite	+$0

Engage Leg, Asymmetrical Desk End, Double

GNLFAL
GNLFAR

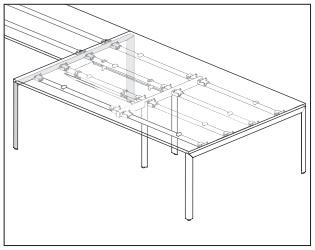

Product Information

Description

This leg supports an asymmetrical application, with a back-to-back application on 1 side of the leg and a single surface on the other side of the leg. It is fixed height, and provides 1¾" of leveling adjustment.

Notes

Size of the leg must match the depth of the surfaces being supported.

Dimensions

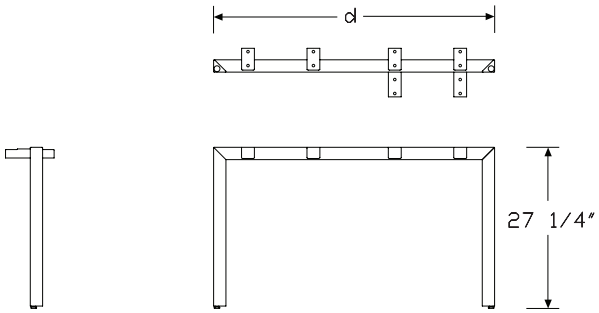

Left Hand

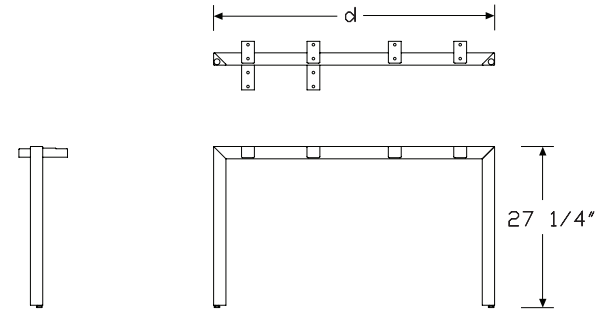

Right Hand

Specification Information

Step 1.

GN

Step 2. Leg Type

LF	fixed height

Step 3. Application

AL.	left hand
AR.	right hand

Step 4. Depth

48	48" deep
60	60" deep

Prices for Steps 1-4.

GNLFAL.	**48**	$400
	60	$424
GNLFAR.	**48**	$400
	60	$424

Step 5. Leg Finish

Metallic Paint

MS	metallic silver	+$0

Sand Texture Paint

91	white	+$0
98	studio white	+$0
BK	black	+$0
G1	graphite	+$0

Engage Leg, Desk End, Double, Meeting End

GNLFPN

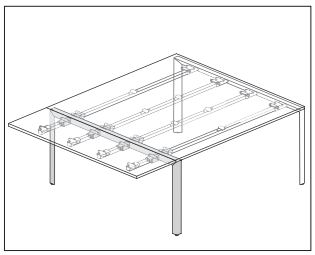

Product Information

Description

This leg supports the use of meeting end beams and surface at the end of a back-to-back bench.

Notes

Size of leg must match the combined depth of the 2 primary surfaces or 1 project table surface being supported.

Order meeting end beams (GNBM.) and surface (GNTDx.) separately.

Dimensions

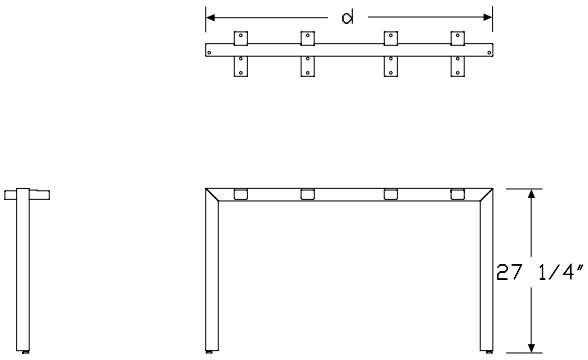

Specification Information

Step 1.

GN

Step 2. Leg Type

LF	fixed height

Step 3. Application

PN.	meeting end

Step 4. Depth

48	48" deep
60	60" deep
72	72" deep

Prices for Steps 1-4.

GNLFPN.	**48**	$390
	60	$435
	72	$468

Step 5. Leg Finish

Metallic Paint

MS	metallic silver	+$0

Sand Texture Paint

91	white	+$0
98	studio white	+$0
BK	black	+$0
G1	graphite	+$0

Engage Leg, Corner Leg GNLFCN

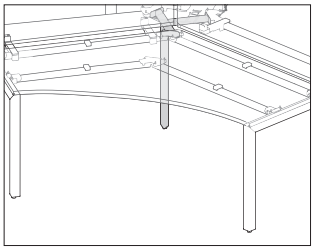

Product Information

Description

This leg provides support at the back corner of a 120° surface. It is fixed height, and provides 1 3/4″ of leveling adjustment.

Notes

Specify the leg based on the number of surfaces to be supported (GNLFCN.1 supports 1 surface, GNLFCN.2 supports 2 surfaces, and GNLFCN.3 supports 3 surfaces.).

Dimensions

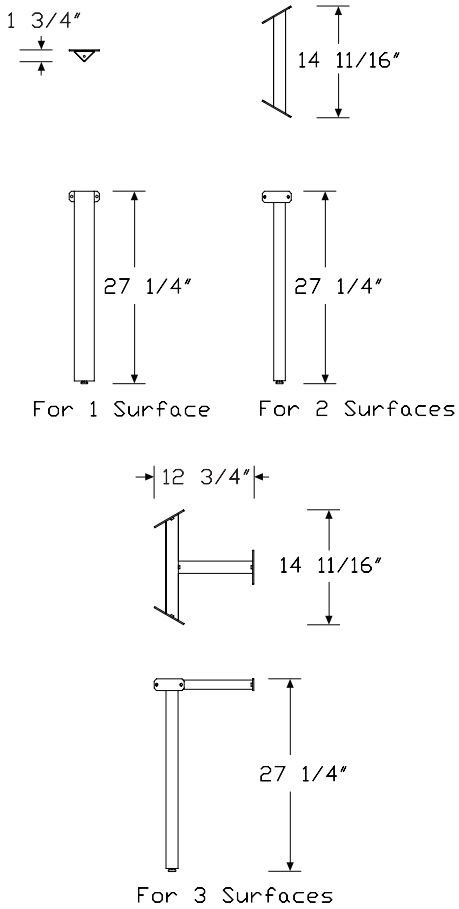

Specification Information

Step 1.

GN

Step 2. Leg Type

LF	fixed height

Step 3. Application

CN.	corner leg

Step 4. Surface Quantity

1	supports one surface
2	supports two surfaces
3	supports three surfaces

Prices for Steps 1-4.

GNLFCN.	**1**	$120
	2	$213
	3	$283

Step 5. Leg Finish

Metallic Paint

MS	metallic silver	+$0

Sand Texture Paint

91	white	+$0
98	studio white	+$0
BK	black	+$0
G1	graphite	+$0

Engage Leg, Back-to-Back Bracing Leg GNLFBN

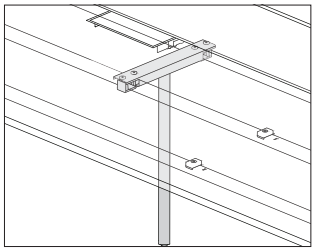

Product Information

Description

This stabilizer leg provides support within a back-to-back bench or project table application, where no intermediate leg is being used. This fixed height leg provides 1¾″ of leveling adjustment.

Notes

This leg is only used with back-to-back or project table applications that have 1 beam width spanning between 2 end legs.

Dimensions

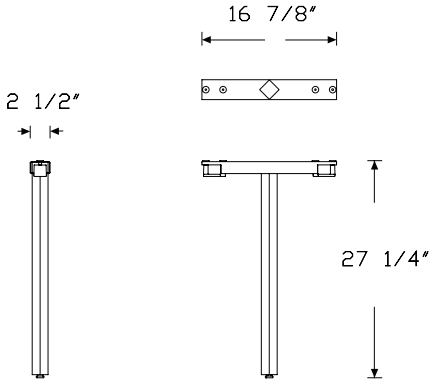

Specification Information

Step 1.

GN A

Step 2. Leg Type

LF	fixed height A	

Step 3. Application

BN.	back-to-back bracing leg A	

Prices for Steps 1-3.

GNLFBN.		$252

Step 4. Leg Finish

Metallic Paint

MS	metallic silver	+$0

Sand Texture Paint

91	white	+$0
98	studio white	+$0
BK	black	+$0
G1	graphite	+$0

Engage Leg, Standing End, Double — GNLSEN

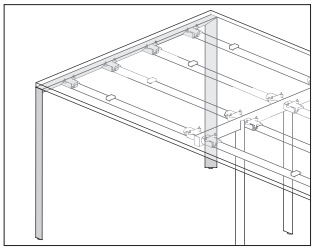

Product Information

Description

This double standing height end leg provides support at either end of a back-to-back bench or project table application. This fixed height leg provides 1¾″ of leveling adjustment.

Notes

Size of leg must match the combined depth of the 2 primary surfaces or 1 project table surface being supported.

Dimensions

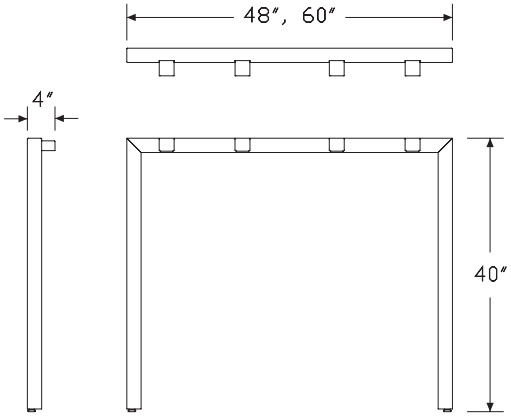

Specification Information

Step 1.

GN A

Step 2. Leg

LS standing height A

Step 3. Application

EN. desk end double A

Step 4. Size

48 48″ deep A
60 60″ deep A

Prices for Steps 1-4.

GNLSEN.	**48**	$543
	60	$577

Step 5. Leg Finish

Metallic Paint

MS	metallic silver A	+$0

Sand Texture Paint

91	white A	+$0
98	studio white A	+$0
BK	black A	+$0
G1	graphite A	+$0

Engage Leg, Intermediate Standing GNLSSN

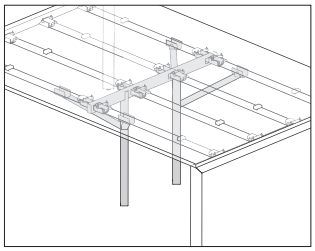

Product Information

Description

This intermediate standing height leg provides support in a back-to-back bench or project table application. This fixed height leg provides 1 3/4" of leveling adjustment. Leg includes all bracing, structural supports, and hardware required for a standing height application.

Notes

Size of leg must match the combined depth of the 2 primary surfaces or 1 project table surface being supported.

Dimensions

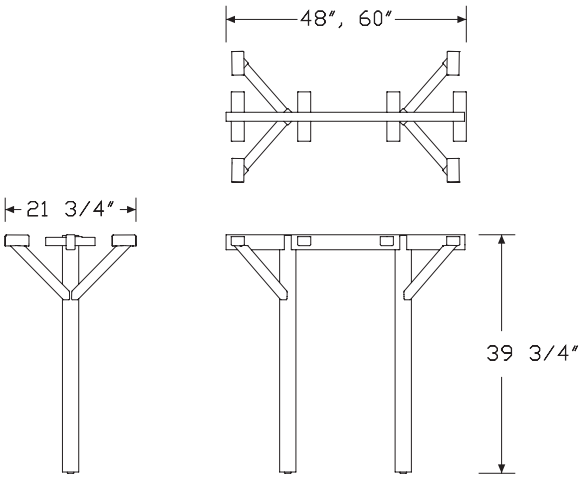

Specification Information

Step 1.

GN A

Step 2. Leg

LS standing height A

Step 3. Application

SN. intermediate A

Step 4. Size

48 48" deep A
60 60" deep A

Prices for Steps 1-4.

GNLSSN. 48		$892
60		$925

Step 5. Leg Finish

Metallic Paint

MS	metallic silver A	+$0

Sand Texture Paint

91	white A	+$0
98	studio white A	+$0
BK	black A	+$0
G1	graphite A	+$0

Engage Leg, Standing Back-to-Back Bracing Leg

GNLSBN

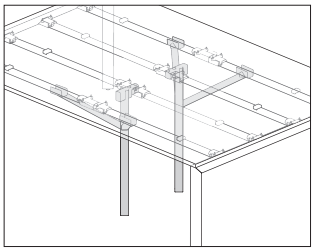

Product Information

Description

This standing height stabilizer leg kit provides support in a back-to-back bench or project table application where no intermediate leg is being used. This fixed height leg provides 1¾" of leveling adjustment. Leg includes all bracing, structural supports, and hardware required for a standing height application.

Notes

This leg is only used in standing height applications that have 1 beam width spanning between 2 end legs, or between 1 end leg and 1 end-of-run storage unit that supports the surface.

This leg can only be used with 42"-wide or wider beams.

Dimensions

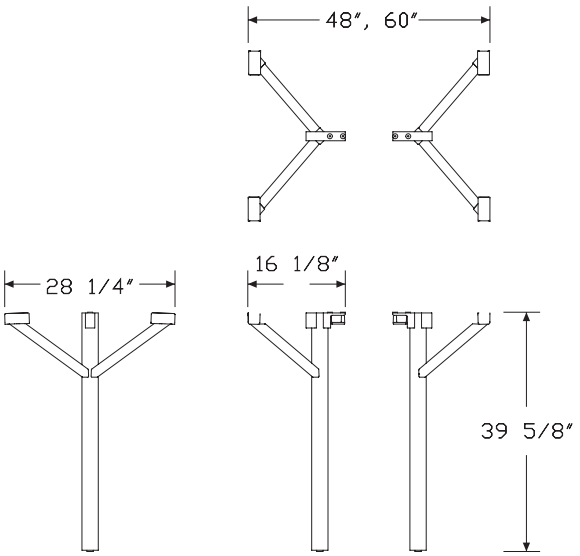

Specification Information

Step 1.

GN A

Step 2. Leg

LS standing height A

Step 3. Application

BN. bracing leg A

Step 4. Depth

48 48" deep application A

60 60" deep application A

Prices for Steps 1-4.

GNLSBN. 48		$834
60		$850

Step 5. Leg Finish

Metallic Paint

MS	metallic silver A	+$0

Sand Texture Paint

91	white A	+$0
98	studio white A	+$0
BK	black A	+$0
G1	graphite A	+$0

Closed Leg, Desk End, Single

GNCFEL
GNCFER

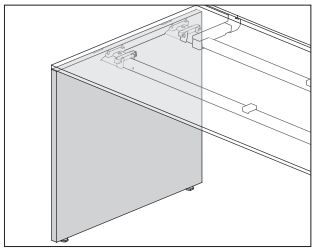

Product Information

Description

This single desk end leg provides support for an individual table or the end of a single-sided bench or return when a performance rail is not being used. It has a laminate top and thermoplastic edge, laminate top with a thermoplastic backed plywood edge, or veneer top and edge. This fixed height leg provides 1 3/4″ of leveling adjustment.

Notes

Size of leg must match depth of surface being supported.

Top of leg will be under the attached surface.

Grain/pattern direction is vertical on veneer, wood grain laminates, and directional laminates.

Dimensions

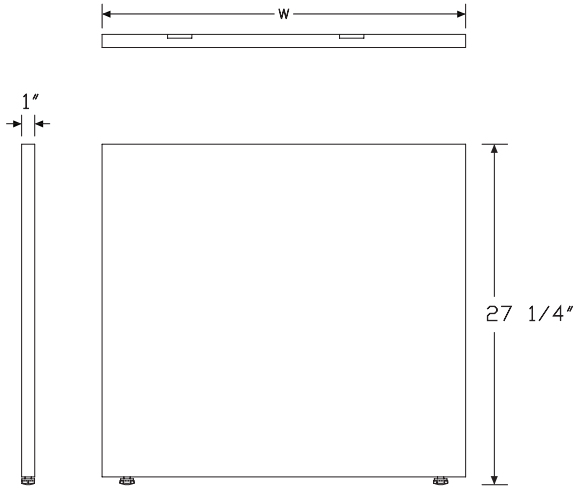

Specification Information

Step 1.

GN A

Step 2. Leg Type

CF fixed height A

Step 3. Application

EL. left hand A

ER. right hand A

Step 4. Size

24 24″ deep A

30 30″ deep A

Step 5. Material

L laminate top/thermoplastic edge A

U laminate top/universal edge A

W veneer A

Prices for Steps 1-5.

		L	U	W
GNCFEL.	**24**	$382	382	763
	30	$400	400	799
GNCFER.	**24**	$382	382	763
	30	$400	400	799

Closed Leg, Desk End, Single

continued

Step 6. Leg Finish

For laminate top/thermoplastic edge (L) or laminate top/universal edge (U)

76	light brown walnut A	+$0
8Q	folkstone grey A	+$0
91	white A	+$0
98	studio white A	+$0
CL	cool grey neutral A	+$0
HF	inner tone light A	+$0
HM	natural maple A	+$0
HP	light anigre A	+$0
HT	inner tone A	+$0
HX	aged cherry A	+$0
HY	walnut on cherry A	+$0
LA	light ash A	+$0
LBA	clear on ash A	+$0
LBR	phantom ecru A	+$0
LBS	phantom cocoa A	+$0
LBU	medium matte walnut A	+$0
LBV	warm grey teak A	+$0
LBB	oak on ash A	+$0
LBC	walnut on ash A	+$0
LBD	dark brown walnut A	+$0
LBF	neutral twill A	+$0
LBG	sarum twill A	+$0
LBH	earthen twill A	+$0
LBJ	graphite twill A	+$0
LBM	crisp linen A	+$0
LBN	classic linen A	+$0
LBP	casual linen A	+$0
LBQ	white twill A	+$0
LT	light tone A	+$0
LU	soft white A	+$0
MT	medium tone A	+$0
WL	sandstone A	+$0
WN	warm grey neutral A	+$0

Wood Veneer

For veneer (W)

2U	light brown walnut A	+$55
40	dark brown walnut A	+$55
ET	clear on ash A	+$55
EU	oak on ash A	+$55
EV	walnut on ash A	+$55

Step 7. Edge Finish

For laminate top/thermoplastic edge (L)

76	light brown walnut A	+$0
8Q	folkstone grey A	+$0
8Z	neutral grey A	+$0
91	white A	+$0
98	studio white A	+$0
BU	black umber A	+$0
CL	cool grey neutral A	+$0
HF	inner tone light A	+$0
HM	natural maple A	+$0
HP	light anigre A	+$0
HT	inner tone A	+$0
HX	aged cherry A	+$0
HY	walnut on cherry A	+$0
JB	millwork cherry A	+$0
LA	light ash A	+$0
LBA	clear on ash A	+$0
LBR	phantom ecru A	+$0
LBS	phantom cocoa A	+$0
LBU	medium matte walnut A	+$0
LBV	warm grey teak A	+$0
LBB	oak on ash A	+$0
LBC	walnut on ash A	+$0
LBD	dark brown walnut A	+$0
LBF	neutral twill A	+$0
LBG	sarum twill A	+$0
LBH	earthen twill A	+$0
LBJ	graphite twill A	+$0
LBK	pewter mesh A	+$0
LBL	steel mesh A	+$0
LBM	crisp linen A	+$0
LBN	classic linen A	+$0
LBP	casual linen A	+$0
LBQ	white twill A	+$0
LU	soft white A	+$0
MT	medium tone A	+$0
WL	sandstone A	+$0
WN	warm grey neutral A	+$0

For laminate top/universal edge (U)

PLY	plywood edge A	+$50

Closed Leg, Desk End, Single

continued

Step 8. Bracket Finish

Finish		
91	white A	+$0
98	studio white A	+$0
BK	black A	+$0
G1	graphite A	+$0
MS	metallic silver A	+$0

Closed Leg, Desk End, Double GNCFEN

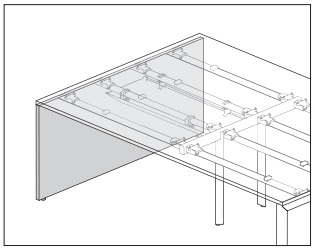

Product Information

Description

This double desk end leg provides support at either end of a back-to-back bench application or project table. It has a laminate top and thermoplastic edge, laminate top with a thermoplastic backed plywood edge, or veneer top and edge. This fixed height leg provides 1¾″ of leveling adjustment.

Notes

Size of leg must match the combined depth of the 2 primary surfaces or 1 project table surface being supported.

Top of leg will be under the attached surface.

Grain/pattern direction is vertical on veneer, wood grain laminates, and directional laminates.

Dimensions

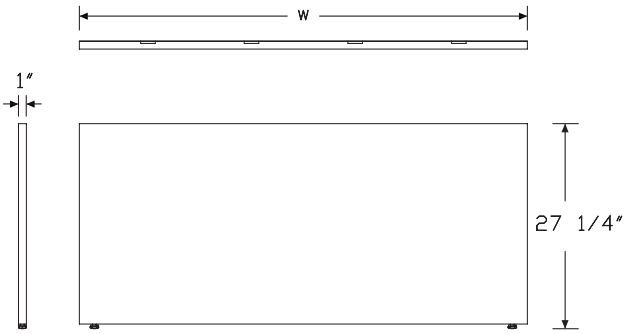

Specification Information

Step 1.

GN A

Step 2. Leg Type

CF fixed height A

Step 3. Application

EN. desk end double A

Step 4. Size

48 48″ deep A

60 60″ deep A

Step 5. Material

L laminate top/thermoplastic edge A

U laminate top/universal edge A

W veneer A

Prices for Steps 1-5.

		L	U	W
GNCFEN.	**48**	$586	586	1169
	60	$674	674	1347

Closed Leg, Desk End, Double

continued

Step 6. Leg Finish

For laminate top/thermoplastic edge (L) or laminate top/universal edge (U)

76	light brown walnut A	+$0
8Q	folkstone grey A	+$0
91	white A	+$0
98	studio white A	+$0
CL	cool grey neutral A	+$0
HF	inner tone light A	+$0
HM	natural maple A	+$0
HP	light anigre A	+$0
HT	inner tone A	+$0
HX	aged cherry A	+$0
HY	walnut on cherry A	+$0
LA	light ash A	+$0
LBA	clear on ash A	+$0
LBR	phantom ecru A	+$0
LBS	phantom cocoa A	+$0
LBU	medium matte walnut A	+$0
LBV	warm grey teak A	+$0
LBB	oak on ash A	+$0
LBC	walnut on ash A	+$0
LBD	dark brown walnut A	+$0
LBF	neutral twill A	+$0
LBG	sarum twill A	+$0
LBH	earthen twill A	+$0
LBJ	graphite twill A	+$0
LBM	crisp linen A	+$0
LBN	classic linen A	+$0
LBP	casual linen A	+$0
LBQ	white twill A	+$0
LT	light tone A	+$0
LU	soft white A	+$0
MT	medium tone A	+$0
WL	sandstone A	+$0
WN	warm grey neutral A	+$0

Wood Veneer

For veneer (W)

2U	light brown walnut A	+$55
40	dark brown walnut A	+$55
ET	clear on ash A	+$55
EU	oak on ash A	+$55
EV	walnut on ash A	+$55

Step 7. Edge Finish

For laminate top/thermoplastic edge (L)

76	light brown walnut A	+$0
8Q	folkstone grey A	+$0
8Z	neutral grey A	+$0
91	white A	+$0
98	studio white A	+$0
BU	black umber A	+$0
CL	cool grey neutral A	+$0
HF	inner tone light A	+$0
HM	natural maple A	+$0
HP	light anigre A	+$0
HT	inner tone A	+$0
HX	aged cherry A	+$0
HY	walnut on cherry A	+$0
JB	millwork cherry A	+$0
LA	light ash A	+$0
LBA	clear on ash A	+$0
LBR	phantom ecru A	+$0
LBS	phantom cocoa A	+$0
LBU	medium matte walnut A	+$0
LBV	warm grey teak A	+$0
LBB	oak on ash A	+$0
LBC	walnut on ash A	+$0
LBD	dark brown walnut A	+$0
LBF	neutral twill A	+$0
LBG	sarum twill A	+$0
LBH	earthen twill A	+$0
LBJ	graphite twill A	+$0
LBK	pewter mesh A	+$0
LBL	steel mesh A	+$0
LBM	crisp linen A	+$0
LBN	classic linen A	+$0
LBP	casual linen A	+$0
LBQ	white twill A	+$0
LU	soft white A	+$0
MT	medium tone A	+$0
WL	sandstone A	+$0
WN	warm grey neutral A	+$0

For laminate top/universal edge (U)

PLY	plywood edge A	+$50

Closed Leg, Desk End, Double

continued

Step 8. Bracket Finish

Finish		
91	white A	+$0
98	studio white A	+$0
BK	black A	+$0
G1	graphite A	+$0
MS	metallic silver A	+$0

Closed Leg, Standing End, Double GNCSEN

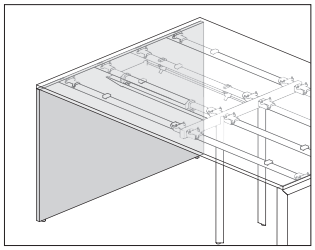

Product Information

Description

This double standing height end leg provides support at either end of a back-to-back bench application or project table. It has a laminate top and thermoplastic edge, laminate top with a thermoplastic backed plywood edge, or veneer top and edge. This fixed height leg provides $1^3/_4$″ of leveling adjustment.

Notes

Size of leg must match the combined depth of the 2 primary surfaces or 1 project table surface being supported.

Top of leg will be under the attached surface.

Grain/pattern direction is vertical on veneer, wood grain laminates, and directional laminates.

Dimensions

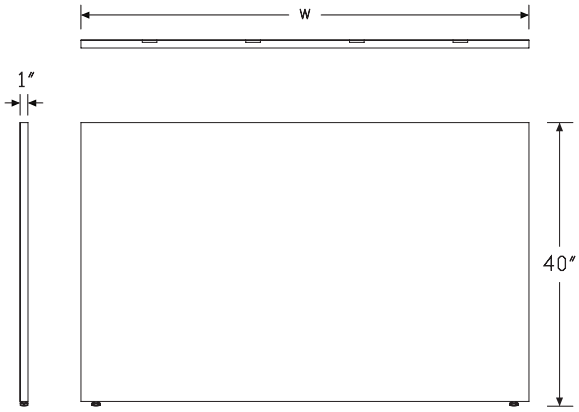

Specification Information

Step 1.

GN A

Step 2. Leg Type

CS standing height A

Step 3. Application

EN. desk end double A

Step 4. Size

48 48″ deep A

60 60″ deep A

Step 5. Material

L laminate top/thermoplastic edge A

U laminate top/universal edge A

W veneer A

Prices for Steps 1-5.

		L	U	W
GNCSEN.	**48**	$756	756	1513
	60	$875	875	1748

Closed Leg, Standing End, Double

continued

Step 6. Leg Finish

For laminate top/thermoplastic edge (L) or laminate top/universal edge (U)

76	light brown walnut A	+$0
8Q	folkstone grey A	+$0
91	white A	+$0
98	studio white A	+$0
CL	cool grey neutral A	+$0
HF	inner tone light A	+$0
HM	natural maple A	+$0
HP	light anigre A	+$0
HT	inner tone A	+$0
HX	aged cherry A	+$0
HY	walnut on cherry A	+$0
LA	light ash A	+$0
LBA	clear on ash A	+$0
LBR	phantom ecru A	+$0
LBS	phantom cocoa A	+$0
LBU	medium matte walnut A	+$0
LBV	warm grey teak A	+$0
LBB	oak on ash A	+$0
LBC	walnut on ash A	+$0
LBD	dark brown walnut A	+$0
LBF	neutral twill A	+$0
LBG	sarum twill A	+$0
LBH	earthen twill A	+$0
LBJ	graphite twill A	+$0
LBM	crisp linen A	+$0
LBN	classic linen A	+$0
LBP	casual linen A	+$0
LBQ	white twill A	+$0
LT	light tone A	+$0
LU	soft white A	+$0
MT	medium tone A	+$0
WL	sandstone A	+$0
WN	warm grey neutral A	+$0

Wood Veneer

For veneer (W)

2U	light brown walnut A	+$55
40	dark brown walnut A	+$55
ET	clear on ash A	+$55
EU	oak on ash A	+$55
EV	walnut on ash A	+$55

Step 7. Edge Finish

For laminate top/thermoplastic edge (L)

76	light brown walnut A	+$0
8Q	folkstone grey A	+$0
8Z	neutral grey A	+$0
91	white A	+$0
98	studio white A	+$0
BU	black umber A	+$0
CL	cool grey neutral A	+$0
HF	inner tone light A	+$0
HM	natural maple A	+$0
HP	light anigre A	+$0
HT	inner tone A	+$0
HX	aged cherry A	+$0
HY	walnut on cherry A	+$0
JB	millwork cherry A	+$0
LA	light ash A	+$0
LBA	clear on ash A	+$0
LBR	phantom ecru A	+$0
LBS	phantom cocoa A	+$0
LBU	medium matte walnut A	+$0
LBV	warm grey teak A	+$0
LBB	oak on ash A	+$0
LBC	walnut on ash A	+$0
LBD	dark brown walnut A	+$0
LBF	neutral twill A	+$0
LBG	sarum twill A	+$0
LBH	earthen twill A	+$0
LBJ	graphite twill A	+$0
LBK	pewter mesh A	+$0
LBL	steel mesh A	+$0
LBM	crisp linen A	+$0
LBN	classic linen A	+$0
LBP	casual linen A	+$0
LBQ	white twill A	+$0
LU	soft white A	+$0
MT	medium tone A	+$0
WL	sandstone A	+$0
WN	warm grey neutral A	+$0

For laminate top/universal edge (U)

PLY	plywood edge A	+$50

Closed Leg, Standing End, Double

continued

Step 8. Bracket Finish		
Metallic Paint		
MS	metallic silver A	+$0
Sand Texture Paint		
91	white A	+$0
98	studio white A	+$0
BK	black A	+$0
G1	graphite A	+$0

Beams, Rectangular Primary GNBR.

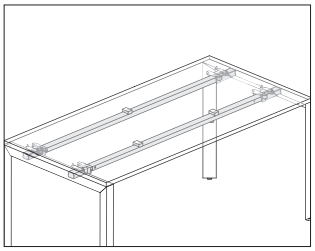

Product Information

Description

This pair of beams connects to end, asymmetrical, and intermediate Engage legs, and is required for the support of rectangular primary surfaces. Beams also provide attachment and support for cable management, screens, and other elements. Attachment hardware packs ordered separately.

Notes

To connect beams to fixed surfaces and legs, order hardware pack (GNHPF.). To connect beams to sliding surfaces and legs, use generic hardware pack (GNHRS.) when using primary sliding surfaces (GNTRD., GNTRF., GNTRG., GNTRN.) with generic (G) attachment option or primary performance rail surfaces (GNTRR.) only.

Dimensions

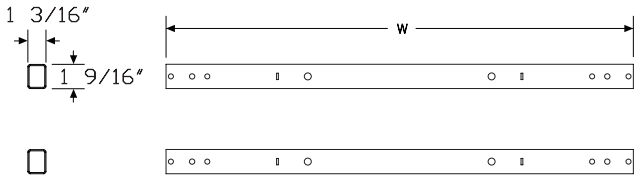

Specification Information

Step 1.

GNBR.

Step 2. Width

36	36″ wide
42	42″ wide
48	48″ wide
54	54″ wide
60	60″ wide
66	66″ wide
72	72″ wide
78	78″ wide A
84	84″ wide A
96	96″ wide A

Prices for Steps 1-2.

GNBR.	**36**	$91
	42	$96
	48	$101
	54	$147
	60	$132
	66	$183
	72	$161
	78	$225
	84	$236
	96	$253

Step 3. Finish

Sand Texture Paint

91	white	+$13
98	studio white	+$0
BK	black	+$0
CL	cool grey neutral	+$0
G1	graphite	+$13

Beams, Rectangular Return

GNBA.
GNBB.

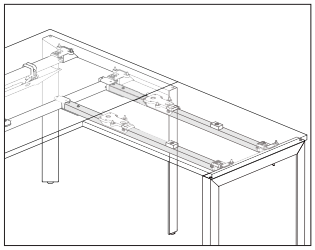

Product Information

Description

This pair of beams supports a return surface. It connects to a rectangular primary beam and a single desk end Engage leg. Beams also provide attachment and support for cable management, screens, and other elements. Attachment hardware packs ordered separately.

Notes

Specify beam type to match depth of primary surface to which it will be attached.

To connect beams to fixed surfaces and legs, order hardware pack (GNHSF.).

Dimensions

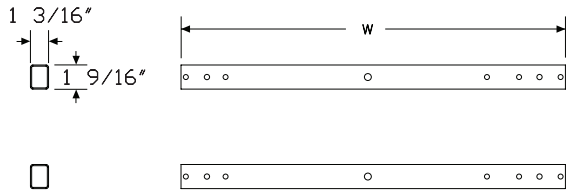

Specification Information

Step 1.

GNB

Step 2. Attachment Depth

A. 24″ deep primary
B. 30″ deep primary

Step 3. Width

36 36″ wide
42 42″ wide
48 48″ wide
60 60″ wide
72 72″ wide

Prices for Steps 1-3.

GNBA.	**36**	$131
	42	$166
	48	$175
	60	$195
	72	$220
GNBB.	**36**	$140
	42	$167
	48	$190
	60	$222
	72	$245

Return Leg Beam Replacement Kit GNBD.

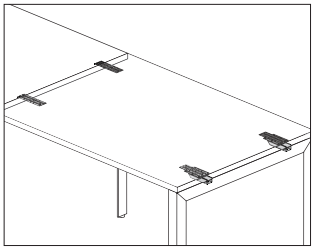

Product Information

Description

This kit supports the attachment of a Layout Studio Engage leg directly to the underside of a return surface without the need for beams. The kit includes 2 beam replacement brackets and ganging hardware to attach the return surface to a primary surface.

Notes

Kit should only be used to support 1 end of a return work surface.

2 kits are required to support a shared return using a double end leg.

Return surfaces 48″ wide and wider require the use of stiffeners.

Standard stiffener rules for Formcoat® surfaces apply.

Specify leg bracket finish to match finish of leg to which it will be attached.

Dimensions

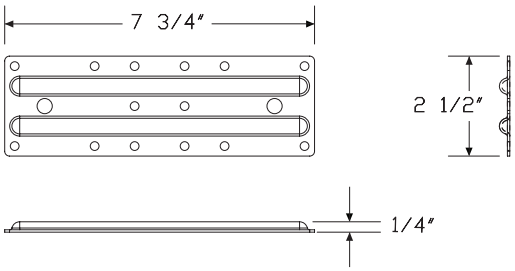

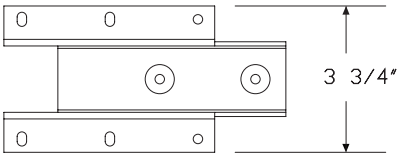

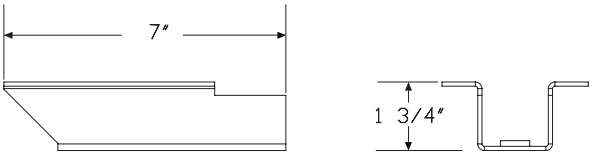

Specification Information

Step 1.

GNBD.		$53

Step 2. Leg Bracket Finish

Metallic Paint

MS	metallic silver	+$0

Sand Texture Paint

91	white	+$0
98	studio white	+$0
BK	black	+$0
G1	graphite	+$0

Beams, Meeting End GNBM.

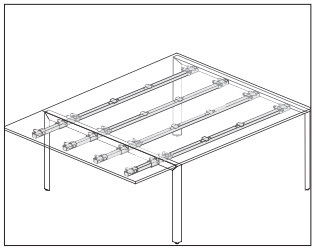

Product Information

Description

This pair of beams connects to a meeting end and intermediate Engage legs, and is required when specifying a meeting end surface across the end of a back-to-back configuration. Beams also provide attachment and support for cable management, screens, and other elements. Attachment hardware packs ordered separately.

Notes

Specify beam size to match the width of the adjacent rectangular primary surface.

To connect beams to fixed surfaces and legs, order hardware pack (GNHPF.). To connect beams to sliding surfaces and legs, use generic hardware pack (GNHRS.) when using primary sliding surfaces (GNTRD., GNTRF., GNTRG., GNTRN.) with generic (G) attachment option or primary performance rail surfaces (GNTRR.) only.

To attach meeting end surface to the meeting end beams, specify 2 hardware packs (GNHPF.).

Meeting end beams are not usable in standing height applications.

Dimensions

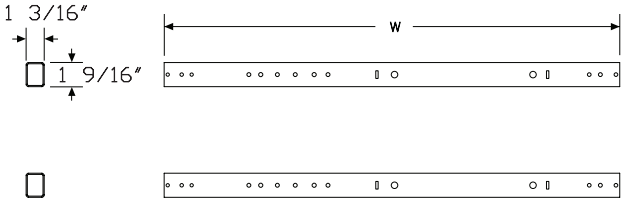

Specification Information

Step 1.

GNBM.

Step 2. Width

48	48" wide
60	60" wide
66	66" wide
72	72" wide
84	84" wide

Prices for Steps 1-2.

GNBM.	**48**	$187
	60	$227
	66	$232
	72	$234
	84	$282

Beams, 120°

GNBF.
GNBG.

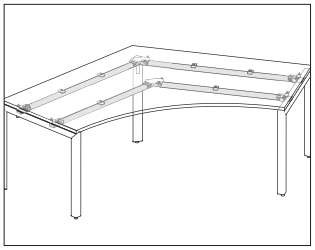

Product Information

Description

This set of beams connects to end or intermediate Engage legs, and a corner Engage leg, and is required for the support of a single 120° primary surface. Beams also provide attachment and support for cable management, screens, and other elements. Set includes 4 beams. Attachment hardware packs ordered separately.

Notes

Order corner leg (GNLFCN.) separately.

To connect beams to fixed surfaces and legs, order hardware pack (GNHDF.).

Dimensions

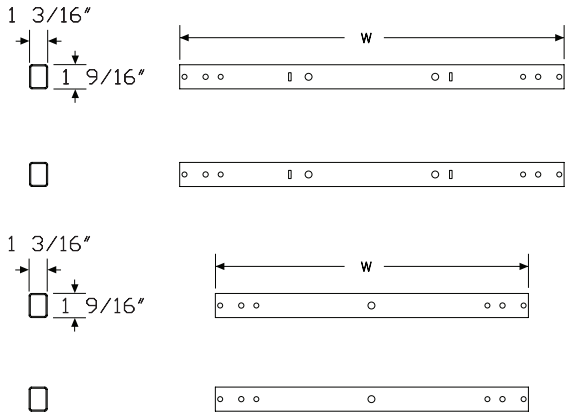

Specification Information

Step 1.

GNB

Step 2. Depth

F. 24″ deep
G. 30″ deep

Step 3. Width

48 48″ wide
54 54″ wide A
60 60″ wide

Prices for Steps 1-3.

GNBF.	**48**	$283
	54	$311
	60	$339
GNBG.	**48**	$283
	54	$311
	60	$339

Access Door GNPD.

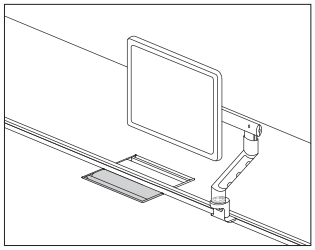

Product Information

Description

This metal door assembly fits inside an access cutout in the back edge of a Layout Studio® primary work surface and provides access to the power and data channel. It has a 3-sided frame and pivoting door.

Notes

Work surface must be specified with access door cutout. Order surface separately.

Dimensions

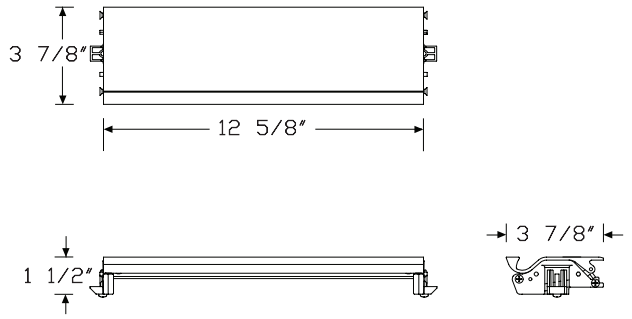

Specification Information

Step 1.

GNPD. A

Step 2. Application

A	edge mounted A	

Prices for Steps 1-2.

GNPD. A		$147

Step 3. Finish

Metallic Paint

MS	metallic silver A	+$0

Sand Texture Paint

BK	black A	+$0

Smooth Paint

91	white A	+$0
98	studio white A	+$0
G1	graphite A	+$0

Junction Block Attachment Bracket GNPA.

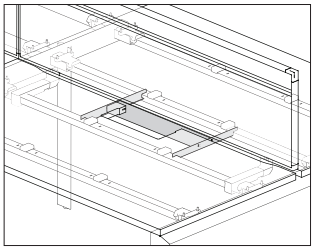

Product Information

Description

This painted steel bracket provides an attachment location for 1 junction block, centered on the rear beams of a table or bench application. Finish is cool grey neutral.

Notes

For double/back-to-back applications, order a 4-circuit junction block (GN1358.) separately.

For single-sided applications, order a 2-duplex block (GN1358.2S) or a 1-duplex block (GN1358.1S) separately.

Dimensions

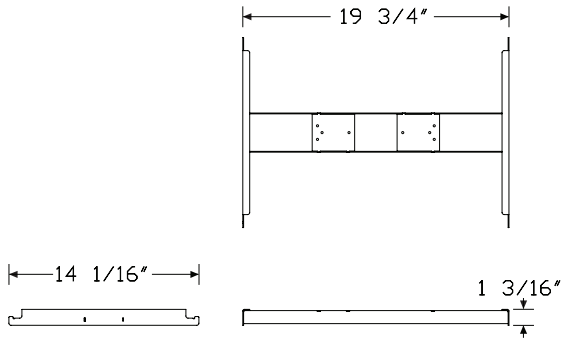

For Double/Back-to-Back Applications (D)

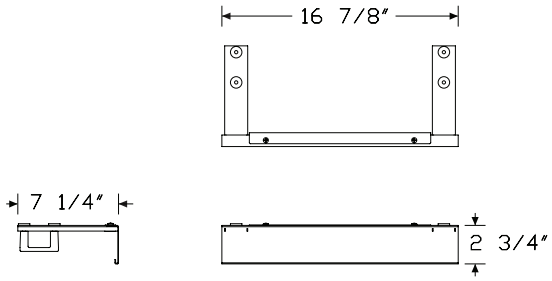

For Single-Sided Applications (S)

Specification Information

Step 1.

GNPA.

Step 2. Application

D	double/back-to-back applications
S	single-sided applications

Prices for Steps 1-2.

GNPA.	**D**	$76
	S	$156

Junction Block, 4-Circuit GN1358

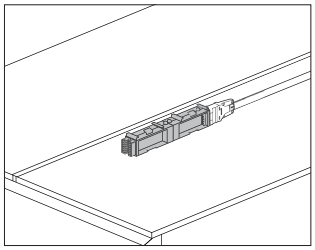

Product Information

Description

This block attaches to a junction block attachment bracket and accepts 4-circuit receptacles for access and distribution of up to 4 20-amp circuits. It has connection points at both ends for attaching a power entry, a 4-circuit power jumper, or block-to-block connector. Finish is black. It is UL Listed for use with Layout Studio® in the US and Canada.

Notes

Layout Studio modular power products are only compatible with other Layout Studio modular products, or with Connect™ 4-circuit modular components. Note that the UL listing for Layout Studio is no longer applicable when connecting Layout Studio power to Connect power.

For single-sided applications, specify the 2-duplex block (GN1358.2S) or the 1-duplex block (GN1358.1S).

For back-to-back applications, specify the 2-duplex block (GN1358.2B) or the 1-duplex block (GN1358.1B).

Order the following products separately:

- Duplex receptacle, 4-circuit (GN1355.)
- Junction block attachment bracket (GNPA.)

To route power from building to junction block, order 4-circuit power entry (GN1351. or GN1352.) separately.

To route power between junction blocks, order junction block to junction block jumper (GN1353.) separately.

To connect 2 junction blocks together, order a short block to block connector (GN1354.S) separately.

Dimensions

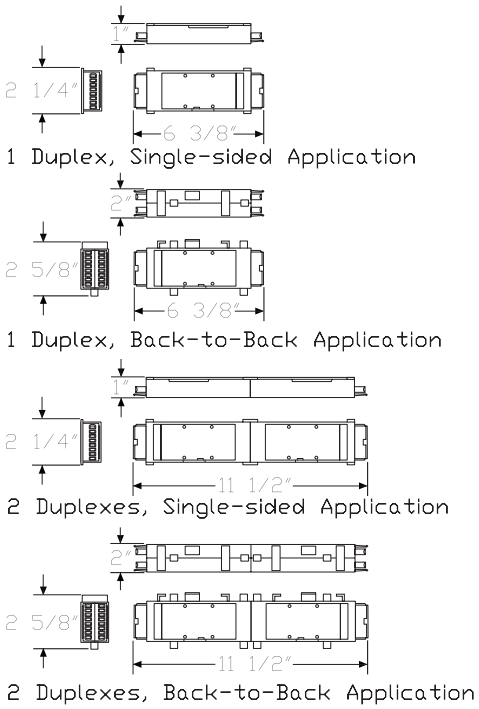

Specification Information

Step 1.

GN1358.

Step 2. Type

1S	1 duplex, single-sided application
1B	1 duplex, back-to-back application
2S	2 duplexes, single-sided application
2B	2 duplexes, back-to-back application

Step 3. Attachment Hardware

B	beam attached
R	performance rail attached

Prices for Steps 1-3.

		B	R
GN1358.	**1S**	$83	95
	1B	$90	100
	2S	$68	79
	2B	$74	85

Block Connector, 4-Circuit GN1354

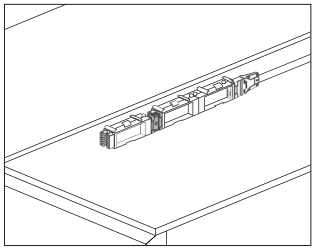

Product Information

Description

This connector connects 2 junction blocks together. Finish is black. Attachment hardware included. It is UL Listed for use with Layout Studio® in the US and Canada.

Notes

Layout Studio modular power products are only compatible with other Layout Studio modular products, or with Connect™ 4-circuit modular components. Note that the UL listing for Layout Studio is no longer applicable when connecting Layout Studio power to Connect power.

When 3 duplex receptacles are required per access point, use this connector to connect a GN1358.1S to a GN1358.2S for single-sided applications, or a GN1358.1B to a GN1358.2B for back-to-back applications.

Dimensions

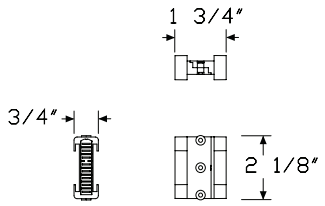

Short Receptacle-to-Receptacle Block Connector

Specification Information

Step 1.

GN1354.S	$45

Junction Block-to-Junction Block Jumper GN1353

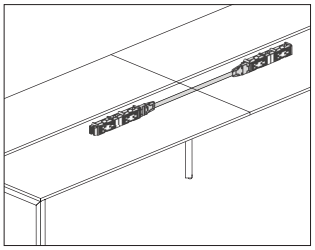

Product Information

Description

This adjustable power jumper distributes up to 4 20-amp circuits between 2 junction blocks. One end of the jumper extends an additional 3″ when connecting to an adjacent junction block. It is UL Listed for use with Layout Studio® in the US and Canada.

Notes

Layout Studio modular power products are only compatible with other Layout Studio modular products, or with Connect™ 4-circuit modular components. Note that the UL listing for Layout Studio is no longer applicable when connecting Layout Studio power to Connect power.

Finish on 5/8″ oval metallic conduit is silver.

For New York City, a harness cover (GNPH.) to span between wire management trays must be ordered separately.

Dimensions

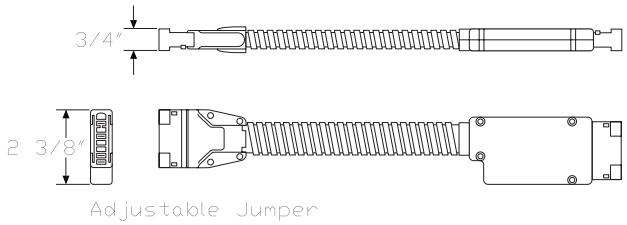

Specification Information

Step 1.

GN1353.

Step 2. Width

12	12″ wide
18	18″ wide
24	24″ wide
30	30″ wide
36	36″ wide
42	42″ wide
48	48″ wide
54	54″ wide
60	60″ wide
66	66″ wide
72	72″ wide
78	78″ wide
84	84″ wide
90	90″ wide
108	108″ wide
120	120″ wide
132	132″ wide
144	144″ wide

Step 3. Type

A	adjustable jumper

Prices for Steps 1-3.

		A
GN1353.	**12**	$72
	18	$78
	24	$82
	30	$89
	36	$94
	42	$98
	48	$103
	54	$109
	60	$115
	66	$119
	72	$124
	78	$131
	84	$135
	90	$140
	108	$155
	120	$164
	132	$176
	144	$186

Harness Cover GNPH.

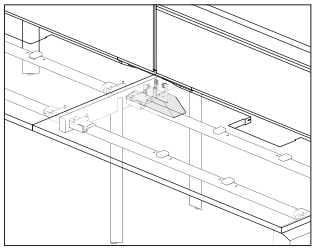

Product Information

Description

This cover provides a secure chase for the routing of a power harness between Layout Studio® wire management trays when UL1286 Listing is required.

Notes

Specify power harness separately.

Dimensions

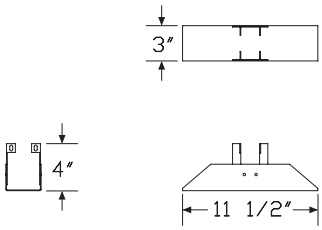

Specification Information

Step 1.

GNPH.	$24

Step 2. Finish

Metallic Paint

MS	metallic silver	+$0

Sand Texture Paint

91	white	+$0
98	studio white	+$0
BK	black	+$0
G1	graphite	+$0

Duplex Receptacle, 4-Circuit GN1355

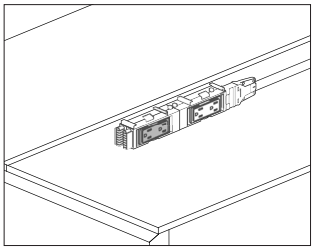

Product Information

Description

This 15- or 20-amp duplex receptacle attaches to a junction block to provide electrical access. Finish is black. Package of 1. It is UL Listed for use with Layout Studio® in the US and Canada.

Notes

Layout Studio modular power products are only compatible with other Layout Studio modular products, or with Connect™ 4-circuit modular components. Note that the UL listing for Layout Studio is no longer applicable when connecting Layout Studio power to Connect power.

Receptacle is labeled as I, II, III, or IV for circuit identification.

Order junction block (GN1358.) separately.

Dimensions

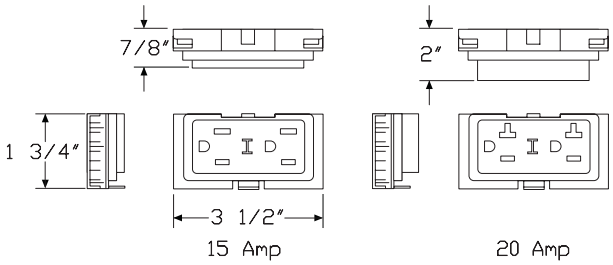

Specification Information

Step 1.

GN1355.

Step 2. Amps

15	15 amp
20	20 amp

Step 3. Circuit

1	circuit I
2	circuit II
3	circuit III
4	circuit IV

Prices for Steps 1-3.

		1	2	3	4
GN1355.	**15**	$21	21	21	21
	20	$26	26	26	26

Power Entry, 4-Circuit GN1351

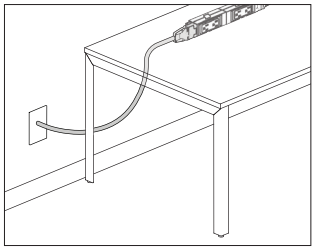

Product Information

Description

This power entry connects a building's electrical from a wall, floor, or column to the end of a 4-circuit junction block and distributes up to 4 20-amp circuits. UL Listed for use with Layout Studio® in the US and Canada.

Notes

Layout Studio modular power products are only compatible with other Layout Studio modular products, or with Connect™ 4-circuit modular components. Note that the UL listing for Layout Studio is no longer applicable when connecting Layout Studio power to Connect power.

Power entry can be field cut to the appropriate length.

For San Francisco, specify 3/8" flex metallic conduit option (C).

Finish color on liquid tight conduit is black. Finish color on metallic conduit is silver.

To manage and/or cover power entry, order umbilical riser (GNWF. or GNWG.) or floor power entry cover (GNPC.) separately.

A licensed electrician must wire the power entry to the building's electrical system.

Dimensions

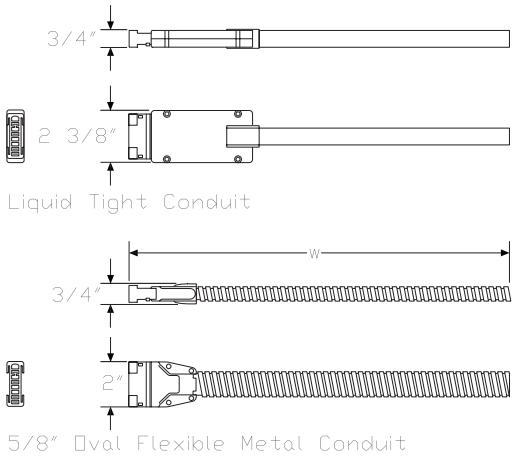

Specification Information

Step 1.

GN1351.

Step 2. Length

06	6' long
12	12' long
18	18' long
24	24' long

Step 3. Conduit Type

L	liquid tight conduit
C	3/8" flex metallic conduit

Prices for Steps 1-3.

		L	C
GN1351.	**06**	$139	139
	12	$197	197
	18	$257	257
	24	$330	330

Power Entry, 4-Circuit, New York City GN1352

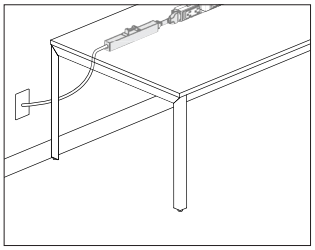

Product Information

Description

This power entry connects a building's electrical from a wall, floor, or column to the end of a 4-circuit junction block and distributes up to 4 20-amp circuits. It includes a junction box and harness. It is UL Listed for use with Layout Studio® in the US and Canada.

Notes

Layout Studio modular power products are only compatible with other Layout Studio modular products, or with Connect™ 4-circuit modular components. Note that the UL listing for Layout Studio is no longer applicable when connecting Layout Studio power to Connect power.

Power entry comes with a 38″ festoon.

A licensed electrician must wire the power entry to the building's electrical system.

Dimensions

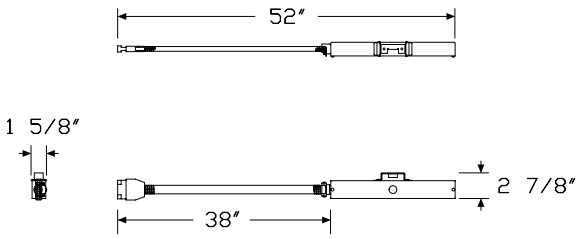

Specification Information

Step 1.

GN1352.38	$220

Wire Management Tray

GNWD.
GNWS.

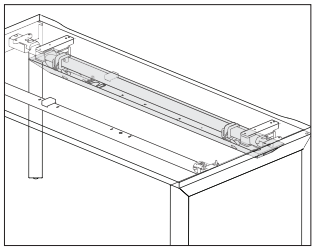

Product Information

Description

This painted steel tray provides a location to hold and manage power and voice/data cables within a Layout Studio® environment. Trays are available for both back-to-back and single-sided applications.

Notes

Single-sided wire management tray is for use with a non-rail surface. For performance rail, order wire management tray, single, performance rail (GNWS.R) separately.

The double unit attaches directly to beams with included hardware.

The single unit attaches to beams, but also requires an additional bracket. For each single tray, order 2 generic beam clamps (GNSG.) separately. If a desk up or modesty screen is being used, the generic beam clamps are not required.

Specify tray width to match beam width.

For use with double tray, order optional cable management clips (GNWC.) separately.

To route power and/or data from the floor to a cable tray, order the umbilical riser (GNWF.T or GNWG.T) separately.

Tray includes a knock-out on each end to allow a power jumper to pass from 1 tray to the next when UL1286 Listing is required (primarily New York City). Order harness cover (GNPH.) separately.

Dimensions

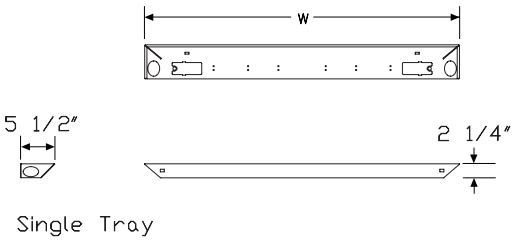

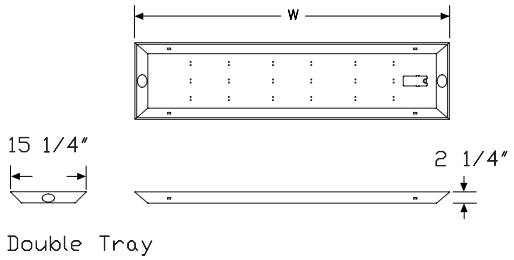

Specification Information

Step 1.

GN

Step 2. Type

WS.	single
WD.	double

Step 3. Width

36	36" wide
42	42" wide
48	48" wide
54	54" wide
60	60" wide
66	66" wide
72	72" wide
78	78" wide
84	84" wide
96	96" wide

Prices for Steps 1-3.

GNWS.	**36**	$141
	42	$143
	48	$145
	54	$169
	60	$194
	66	$197
	72	$199
	78	$205
	84	$223
	96	$239
GNWD.	**36**	$135
	42	$139
	48	$143
	54	$162
	60	$177
	66	$180
	72	$182
	78	$187
	84	$205
	96	$220

Step 4. Finish

Metallic Paint

MS	metallic silver	+$0

Sand Texture Paint		
91	white	+$0
98	studio white	+$0
BK	black	+$0
G1	graphite	+$0

Data Module GNWM.

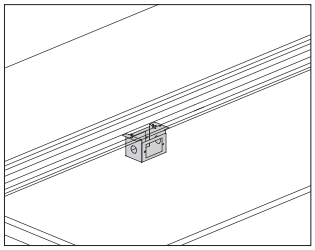

Product Information

Description

This housing mounts to the underside of a Layout Studio® performance rail or to the bottom of a wire management tray and supports face plates with voice/data ports. Finish is cool grey neutral. Attachment hardware included.

Notes

Housing accepts a standard NEMA data faceplate.

Dimensions

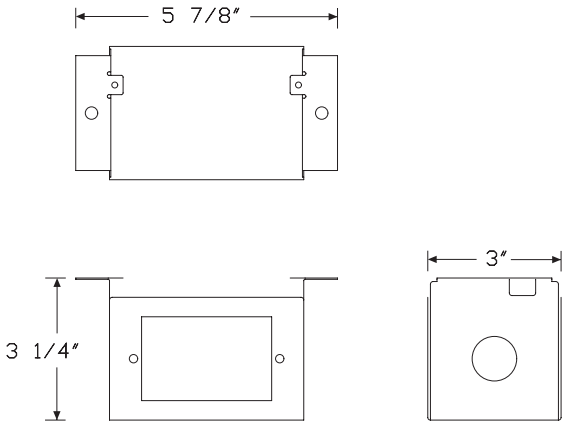

Specification Information

Step 1.

GN A

Step 2. Application

WM. data box A

Prices for Steps 1-2.

GNWM. $28

Cable Management Clips, Double Tray GNWC.

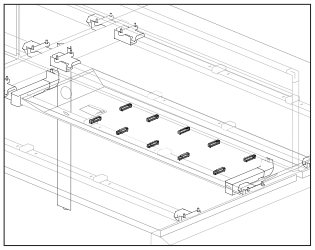

Product Information

Description

These clips attach into holes in the bottom of a double cable management tray to manage voice/data cables. Package includes 10 clips.

Dimensions

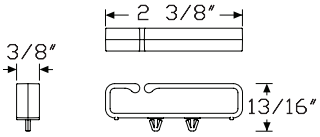

Specification Information

Step 1.

GNWC.

Step 2. Quantity

10 10 per pack

Prices for Steps 1-2.

GNWC.	**10**	$15

Floor Power Entry Cover GNPC.

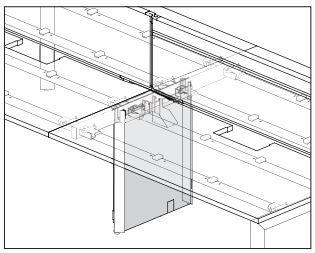

Product Information

Description

This 2-piece painted metal cover encloses the open space located between the 2 legs of a Layout Studio® 48″-, 60″-, or 72″-deep intermediate desk leg. It is used to conceal a floor power entry and/or cables from the floor to a wire management tray. Attachment hardware included.

Dimensions

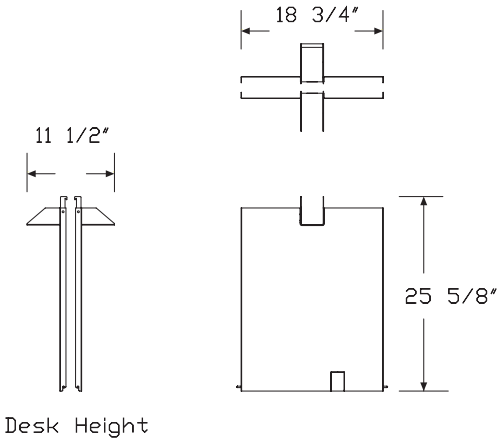

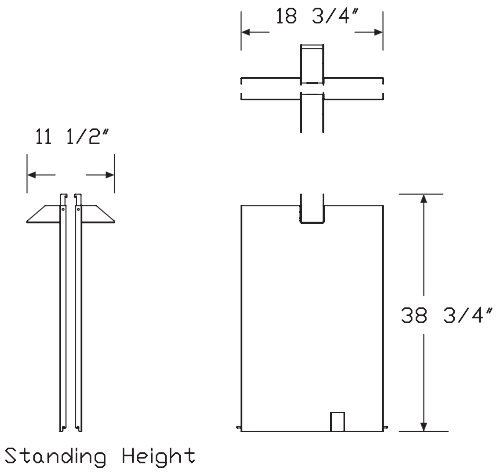

Specification Information

Step 1.

GNPC.

Step 2. Height

F	desk height	
S	standing height	

Prices for Steps 1-2.

GNPC.	**F**	$216
	S	$256

Step 3. Finish

Metallic Paint

MS	metallic silver	+$0

Sand Texture Paint

91	white	+$0
98	studio white	+$0
BK	black	+$0
G1	graphite	+$0

Umbilical Riser, Fixed Height

GNWF.
GNWG.

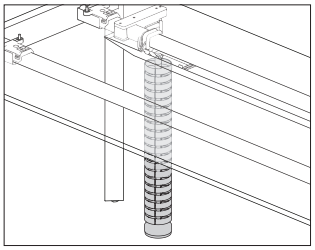

Product Information

Description

This umbilical riser routes power and/or data cables from the floor to the underside of a surface or wire management tray.

Notes

For data capacity, see Cable Capacity Chart in Omni.

Dimensions

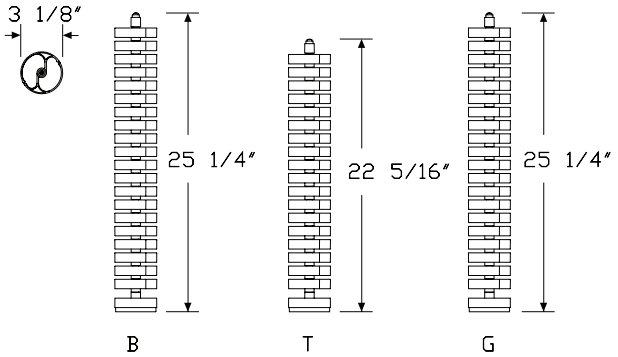

Fixed, seated height

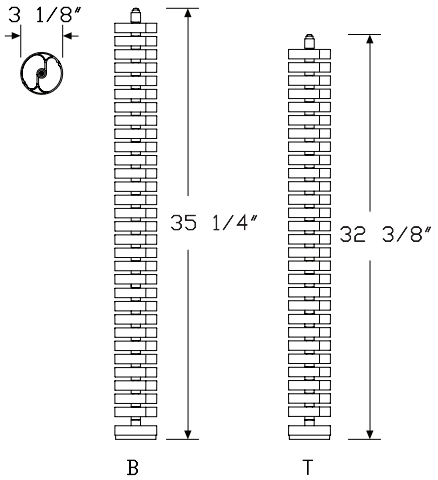

Fixed, standing height

Specification Information

Step 1.

GN

Step 2. Type

WG.	fixed, standing height [A]
WF.	fixed, seated height

Step 3. Attachment

For fixed, seated height (WF.)

B	beam attachment
T	tray attachment
G	generic attachment

For fixed, standing height (WG.)

B	beam attachment
T	tray attachment

Prices for Steps 1-3.

GNWG.	**B**	$163
	T	$157
GNWF.	**B**	$80
	T	$73
	G	$88

Step 4. Finish

Metallic Paint

MS	metallic silver	+$0

Sand Texture Paint

91	white	+$0
98	studio white	+$0
BK	black	+$0
G1	graphite	+$0

Primary Work Surface, Rectangular

GNTRD.
GNTRF.
GNTRG.
GNTRN.

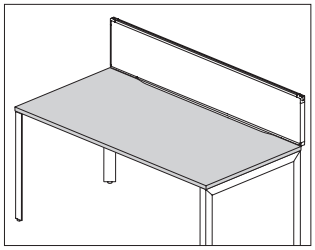

Product Information

Description

This squared-edge surface attaches to one set of primary beams and Engage legs in either a table, single-sided bench, or back-to-back bench application. It has a laminate top with thermoplastic edge, laminate top with a thermoplastic backed plywood edge, or veneer top and edge. Surface is 1 1/8″ thick, and has several back edge options depending on application and access required.

Notes

When attaching a monitor arm or other item that clamps to the back edge of a surface, specify the flash gap (F) or flash gap and access door cutout (G).

The flash gap is 0.6″ deep and starts 7 5/8″ from each end.

For surfaces with access door cutout, an access door (GNPD.) must be ordered separately. For surfaces 84″ and 96″ wide, 2 access doors must be ordered.

Surfaces with a flash gap and access door cutout (GNTRG.) are only available 48″ wide and wider.

Order attachment hardware pack (GNHPF., GNHRS.) separately.

Sliding surface attachment is available for 24″- or 30″-deep rectangular primary surface when using a performance rail or when using a non-rail surface with the generic attachment option. Order rectangular primary surface sliding hardware pack (GNHRS.) separately.

For quick release attachment, order quick release attachment hardware pack (GNHPA.) separately, in addition to the fixed attachment hardware pack (GNHPF.).

Attaching clamp-mounted components to the back edge of a sliding surface may result in reduced surface extension.

Dimensions

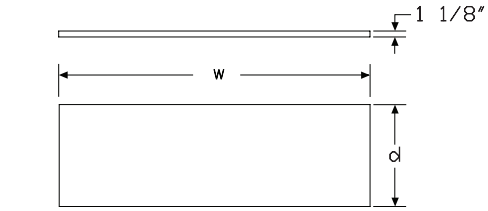

No Flash gap or Access door cutout

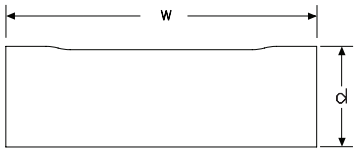

Flash gap

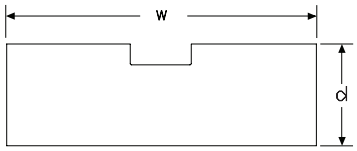

Access door cutout

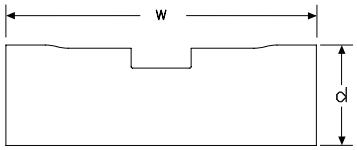

Flash gap and Access door cutout

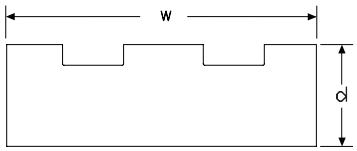

84″, 96″ wide with Access door cutout

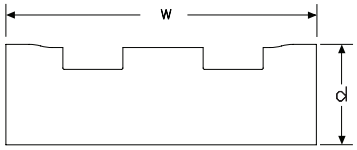

84″, 96″ wide with Flash gap and Access door cutout

Specification Information

Step 1.

GN

Step 2. Type

TR rectangular primary worksurface

Step 3. Access Detail

N. no flash gap or access cut-out
F. flash gap
D. access door cut-out [A]
G. flash gap and access door cut-out [A]

Step 4. Depth

24 24″ deep
30 30″ deep
36 36″ deep

Step 5. Width

For no flash gap or access cut-out (N.), flash gap (F.), or access door cut-out (D.)

36 36″ wide
42 42″ wide
48 48″ wide
54 54″ wide [A]
60 60″ wide
66 66″ wide [A]
72 72″ wide
78 78″ wide
84 84″ wide
96 96″ wide

For flash gap and access door cut-out (G.)

48 48″ wide
54 54″ wide
60 60″ wide
66 66″ wide
72 72″ wide
78 78″ wide
84 84″ wide
96 96″ wide

Step 6. Attachment

For 36" deep (36)

F non-sliding

For access door cut-out (D.) or flash gap and access door cut-out (G.) with 24" deep (24) or 30" deep (30) with 48" wide (48), 42" wide (42), 54" wide (54), 60" wide (60), 66" wide (66), 72" wide (72), or 78" wide (78)

G generic

For no flash gap or access cut-out (N.) or flash gap (F.) with 30" deep (30) with 48" wide (48), 42" wide (42), 54" wide (54), 60" wide (60), 66" wide (66), 72" wide (72), or 78" wide (78)

F non-sliding
G generic

For no flash gap or access cut-out (N.) or flash gap (F.) with 24" deep (24) with 48" wide (48), 42" wide (42), 54" wide (54), 60" wide (60), 66" wide (66), 72" wide (72), or 78" wide (78)

F non-sliding
G generic

For no flash gap or access cut-out (N.), flash gap (F.), access door cut-out (D.), or flash gap and access door cut-out (G.) with 24" deep (24) or 30" deep (30) with 84" wide (84) or 96" wide (96)

F non-sliding

For access door cut-out (D.) with 24" deep (24) or 30" deep (30) with 36" wide (36)

F non-sliding

For no flash gap or access cut-out (N.) or flash gap (F.) with 24" deep (24) with 36" wide (36)

F non-sliding
G generic

For no flash gap or access cut-out (N.) or flash gap (F.) with 30" deep (30) with 36" wide (36)

F non-sliding
G generic

Step 7. Surface Material

L laminate top/thermoplastic edge
W veneer
U laminate top/universal edge

Primary Work Surface, Rectangular *continued*

Prices for Steps 1-7.

		FL	FW	FU	GL	GW	GU
GNTRN.24	**36**	$130	235	130	133	241	133
	42	$146	262	146	150	269	150
	48	$160	290	160	164	297	164
	54	$179	320	179	184	330	184
	60	$198	352	198	203	362	203
	66	$221	391	221	226	402	226
	72	$240	430	240	248	441	248
	78	$281	497	281	290	510	290
	84	$320	563	320	—	—	—
	96	$352	617	352	—	—	—
30	**36**	$155	270	155	159	277	159
	42	$172	304	172	177	311	177
	48	$191	341	191	196	350	196
	54	$214	379	214	220	389	220
	60	$235	417	235	241	428	241
	66	$262	462	262	269	474	269
	72	$290	508	290	297	520	297
	78	$334	586	334	343	601	343
	84	$379	665	379	—	—	—
	96	$415	727	415	—	—	—
36	**36**	$183	327	183	—	—	—
	42	$203	364	203	—	—	—
	48	$225	398	225	—	—	—
	54	$250	442	250	—	—	—
	60	$275	484	275	—	—	—
	66	$303	538	303	—	—	—
	72	$336	590	336	—	—	—
	78	$389	681	389	—	—	—
	84	$442	773	442	—	—	—
	96	$483	845	483	—	—	—
GNTRF. 24	**36**	$175	282	175	179	289	179
	42	$191	307	191	196	316	196
	48	$205	334	205	212	344	212
	54	$225	366	225	230	377	230
	60	$242	397	242	251	408	251
	66	$266	438	266	272	449	272
	72	$287	476	287	295	489	295
	78	$326	543	326	335	558	335
	84	$366	610	366	—	—	—
	96	$397	665	397	—	—	—
30	**36**	$200	316	200	205	324	205
	42	$219	351	219	224	360	224
	48	$235	387	235	241	396	241
	54	$259	426	259	266	437	266
	60	$282	463	282	288	475	288
	66	$312	509	312	321	521	321
	72	$334	553	334	344	569	344
	78	$380	633	380	390	649	390
	84	$426	712	426	—	—	—
	96	$462	775	462	—	—	—
36	**36**	$228	374	228	—	—	—
	42	$250	409	250	—	—	—
	48	$270	444	270	—	—	—
	54	$296	488	296	—	—	—
	60	$321	532	321	—	—	—
	66	$353	585	353	—	—	—
	72	$382	637	382	—	—	—
	78	$436	729	436	—	—	—
	84	$488	821	488	—	—	—
	96	$531	893	531	—	—	—
GNTRD.24	**36**	$147	249	147	—	—	—
	42	—	—	—	$162	276	162
	48	—	—	—	$176	301	176
	54	—	—	—	$195	332	195
	60	—	—	—	$214	362	214
	66	—	—	—	$235	400	235
	72	—	—	—	$254	439	254
	78	—	—	—	$293	503	293
	84	$332	568	332	—	—	—
	96	$362	619	362	—	—	—
30	**36**	$171	283	171	—	—	—
	42	—	—	—	$188	317	188
	48	—	—	—	$205	352	205
	54	—	—	—	$229	389	229
	60	—	—	—	$249	427	249
	66	—	—	—	$276	470	276
	72	—	—	—	$301	513	301
	78	—	—	—	$346	590	346
	84	$389	666	389	—	—	—
	96	$426	727	426	—	—	—

36	**36**	$198	339	198	—	—	—
	42	$219	374	219	—	—	—
	48	$239	406	239	—	—	—
	54	$264	450	264	—	—	—
	60	$288	491	288	—	—	—
	66	$319	544	319	—	—	—
	72	$348	594	348	—	—	—
	78	$398	683	398	—	—	—
	84	$450	771	450	—	—	—
	96	$490	842	490	—	—	—
GNTRG.24	**48**	—	—	—	$225	352	225
	54	—	—	—	$242	382	242
	60	—	—	—	$260	412	260
	66	—	—	—	$284	452	284
	72	—	—	—	$303	491	303
	78	—	—	—	$343	556	343
	84	$382	622	382	—	—	—
	96	$412	676	412	—	—	—
30	**48**	—	—	—	$253	402	253
	54	—	—	—	$277	441	277
	60	—	—	—	$298	477	298
	66	—	—	—	$329	522	329
	72	—	—	—	$352	568	352
	78	—	—	—	$396	646	396
	84	$441	723	441	—	—	—
	96	$476	784	476	—	—	—
36	**48**	$288	459	288	—	—	—
	54	$312	503	312	—	—	—
	60	$337	545	337	—	—	—
	66	$368	599	368	—	—	—
	72	$398	650	398	—	—	—
	78	$450	740	450	—	—	—
	84	$503	830	503	—	—	—
	96	$544	901	544	—	—	—

Step 8. Surface Finish

For laminate top/thermoplastic edge (L) or laminate top/universal edge (U)

76	light brown walnut	+$0
91	white	+$0
98	studio white	+$0
8Q	folkstone grey	+$0
CL	cool grey neutral	+$0
HF	inner tone light	+$0
HM	natural maple	+$0
HP	light anigre	+$0
HT	inner tone	+$0
HX	aged cherry	+$0
HY	walnut on cherry	+$0
LA	light ash	+$0
LBA	clear on ash	+$0
LBR	phantom ecru	+$0
LBS	phantom cocoa	+$0
LBU	medium matte walnut	+$0
LBV	warm grey teak	+$0
LBB	oak on ash	+$0
LBC	walnut on ash	+$0
LBD	dark brown walnut	+$0
LBF	neutral twill	+$0
LBG	sarum twill	+$0
LBH	earthen twill	+$0
LBJ	graphite twill	+$0
LBM	crisp linen	+$0
LBN	classic linen	+$0
LBP	casual linen	+$0
LBQ	white twill	+$0
LU	soft white	+$0
WL	sandstone	+$0
WN	warm grey neutral	+$0

Wood Veneer

For veneer (W)

2U	light brown walnut	+$55
40	dark brown walnut	+$55
ET	clear on ash	+$55
EU	oak on ash	+$55
EV	walnut on ash	+$55

Step 9. Edge Finish		
For laminate top/thermoplastic edge (L)		
76	light brown walnut	+$0
8Q	folkstone grey	+$0
91	white	+$0
98	studio white	+$0
CL	cool grey neutral	+$0
LA	light ash	+$0
LBA	clear on ash	+$0
LBR	phantom ecru	+$0
LBS	phantom cocoa	+$0
LBU	medium matte walnut	+$0
LBV	warm grey teak	+$0
LBB	oak on ash	+$0
LBC	walnut on ash	+$0
LBD	dark brown walnut	+$0
LBF	neutral twill	+$0
LBG	sarum twill	+$0
LBH	earthen twill	+$0
LBJ	graphite twill	+$0
LBK	pewter mesh	+$0
LBL	steel mesh	+$0
LBM	crisp linen	+$0
LBN	classic linen	+$0
LBP	casual linen	+$0
LBQ	white twill	+$0
WL	sandstone	+$0
WN	warm grey neutral	+$0
HF	inner tone light	+$0
HM	natural maple	+$0
HP	light anigre	+$0
HT	inner tone	+$0
HX	aged cherry	+$0
HY	walnut on cherry	+$0
LU	soft white	+$0
For laminate top/universal edge (U)		
PLY	plywood edge A	+$50

Step 10. Flash Gap Edge Finish *For flash gap (F.) or flash gap and access door cut-out (G.) with laminate top/universal edge (U)*		
76	light brown walnut	+$0
8Q	folkstone grey	+$0
91	white	+$0
98	studio white	+$0
CL	cool grey neutral	+$0
HF	inner tone light	+$0
HM	natural maple	+$0
HP	light anigre	+$0
HT	inner tone	+$0
HX	aged cherry	+$0
HY	walnut on cherry	+$0
LA	light ash	+$0
LBA	clear on ash	+$0
LBB	oak on ash	+$0
LBC	walnut on ash	+$0
LBD	dark brown walnut	+$0
LBF	neutral twill	+$0
LBG	sarum twill	+$0
LBH	earthen twill	+$0
LBJ	graphite twill	+$0
LBK	pewter mesh	+$0
LBL	steel mesh	+$0
LBM	crisp linen	+$0
LBN	classic linen	+$0
LBP	casual linen	+$0
LBQ	white twill	+$0
LBR	phantom ecru	+$0
LBS	phantom cocoa	+$0
LBU	medium matte walnut	+$0
LBV	warm grey teak	+$0
LU	soft white	+$0
WL	sandstone	+$0
WN	warm grey neutral	+$0

Return Work Surface, Rectangular GNTSN.

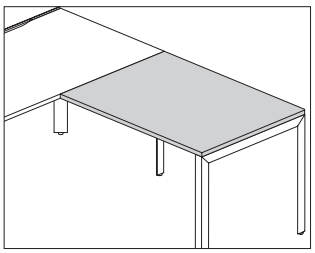

Product Information

Description

This squared-edge surface attaches to one set of return beams and an Engage leg to create a return. It has a laminate top with thermoplastic edge, laminate top with a thermoplastic backed plywood edge, or veneer top and edge. Surface is 1 1/8″ thick.

Notes

When using a screen along the back edge of the surface, items that clamp to the back edge of the surface cannot be used.

Order fixed attachment hardware pack (GNHSF.) separately.

For quick release attachment, order quick release attachment hardware pack (GNHPA.) separately, in addition to the fixed attachment hardware pack (GNHSF.).

Dimensions

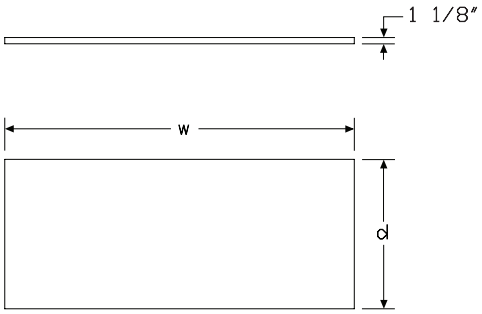

Specification Information

Step 1.

GN

Step 2. Type

TS rectangular return worksurface

Step 3. Access Detail

N. no flash gap or access cut-out

Step 4. Depth

24 24″ deep

Step 5. Width

36 36″ wide
42 42″ wide
48 48″ wide
60 60″ wide
72 72″ wide

Step 6. Attachment

F non-sliding

Step 7. Surface Material

L laminate top/thermoplastic edge
W veneer
U laminate top/universal edge

Prices for Steps 1-7.

		FL	FW	FU
GNTSN.24	**36**	$149	257	149
	42	$167	283	167
	48	$182	309	182
	60	$200	368	200
	72	$258	445	258

Return Work Surface, Rectangular

continued

Step 8. Surface Finish

For laminate top/thermoplastic edge (L) or laminate top/universal edge (U)

76	light brown walnut	+$0
91	white	+$0
98	studio white	+$0
8Q	folkstone grey	+$0
CL	cool grey neutral	+$0
HF	inner tone light	+$0
HM	natural maple	+$0
HP	light anigre	+$0
HT	inner tone	+$0
HX	aged cherry	+$0
HY	walnut on cherry	+$0
LA	light ash	+$0
LBA	clear on ash	+$0
LBR	phantom ecru	+$0
LBS	phantom cocoa	+$0
LBU	medium matte walnut	+$0
LBV	warm grey teak	+$0
LBB	oak on ash	+$0
LBC	walnut on ash	+$0
LBD	dark brown walnut	+$0
LBF	neutral twill	+$0
LBG	sarum twill	+$0
LBH	earthen twill	+$0
LBJ	graphite twill	+$0
LBM	crisp linen	+$0
LBN	classic linen	+$0
LBP	casual linen	+$0
LBQ	white twill	+$0
LU	soft white	+$0
WL	sandstone	+$0
WN	warm grey neutral	+$0

Wood Veneer

For veneer (W)

2U	light brown walnut	+$55
40	dark brown walnut	+$55
ET	clear on ash	+$55
EU	oak on ash	+$55
EV	walnut on ash	+$55

Step 9. Edge Finish

For laminate top/thermoplastic edge (L)

76	light brown walnut	+$0
8Q	folkstone grey	+$0
91	white	+$0
98	studio white	+$0
CL	cool grey neutral	+$0
LA	light ash	+$0
LBA	clear on ash	+$0
LBR	phantom ecru	+$0
LBS	phantom cocoa	+$0
LBU	medium matte walnut	+$0
LBV	warm grey teak	+$0
LBB	oak on ash	+$0
LBC	walnut on ash	+$0
LBD	dark brown walnut	+$0
LBF	neutral twill	+$0
LBG	sarum twill	+$0
LBH	earthen twill	+$0
LBJ	graphite twill	+$0
LBK	pewter mesh	+$0
LBL	steel mesh	+$0
LBM	crisp linen	+$0
LBN	classic linen	+$0
LBP	casual linen	+$0
LBQ	white twill	+$0
WL	sandstone	+$0
WN	warm grey neutral	+$0
HF	inner tone light	+$0
HM	natural maple	+$0
HP	light anigre	+$0
HT	inner tone	+$0
HX	aged cherry	+$0
HY	walnut on cherry	+$0
LU	soft white	+$0

For laminate top/universal edge (U)

PLY	plywood edge	+$50

Project Table, Rectangular

GNTPA.
GNTPN.

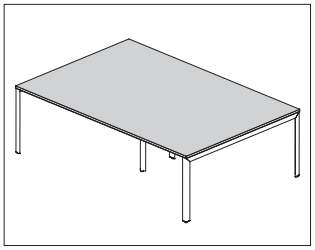

Product Information

Description

This squared-edge surface attaches to primary beams and Engage legs to create a freestanding table. It has a laminate top with thermoplastic edge, laminate top with a thermoplastic backed plywood edge, or veneer top and edge. Surface is 1 1/8″ thick.

Notes

2 or more sets of beams (GNBR.) are required per surface. Order separately.

Tables must include at least 1 intermediate leg (GNLFSN.) or 1 bracing leg (GNLFBN.).

For surfaces with access cut-out, a 5-outlet Logic grommet mounted electrical distributor (Y1425.C or Y1425.F) or Logic grommet pass thru (Y1420.V) must be ordered separately.

For surfaces with access cutout and widths of 72″, 84″ or 96″, 2 access cut-outs are included.

Order attachment hardware pack (GNHPF.) separately.

Dimensions

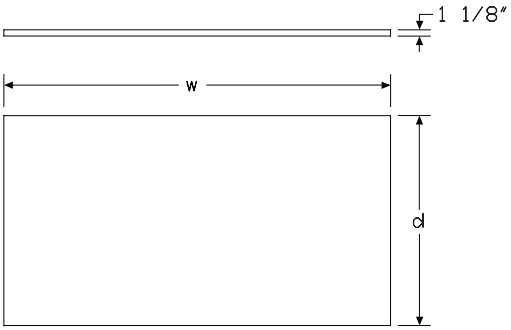

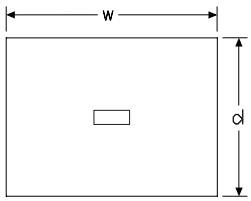

48″, 60″ wide

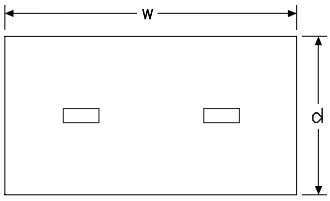

72″, 84″, 96″ wide

Specification Information

Step 1.

GN

Step 2. Type

TP rectangular project table

Step 3. Access Detail

N. no access cut-out
A. access cut-out

Step 4. Depth

48 48″ deep
60 60″ deep

Step 5. Width

For 48″ deep (48)

48 48″ wide
60 60″ wide
72 72″ wide
84 84″ wide
96 96″ wide

For 60″ deep (60)

60 60″ wide
72 72″ wide
84 84″ wide
96 96″ wide

Step 6. Attachment

F non-sliding

Step 7. Surface Material

L laminate top/thermoplastic edge
W veneer
U laminate top/universal edge

Prices for Steps 1-7.

		FL	FW	FU
GNTPN.48	**48**	$335	580	335
	60	$398	687	398
	72	$483	827	483
	84	$603	1070	603
	96	$687	1200	687

60	**60**	$584	1005	584
	72	$664	1137	664
	84	$855	1480	855
	96	$971	1579	971
GNTPA. 48	**48**	$379	623	379
	60	$443	731	443
	72	$527	872	527
	84	$691	1158	691
	96	$775	1287	775
60	**60**	$627	1049	627
	72	$707	1181	707
	84	$944	1568	944
	96	$1058	1667	1058

Step 8. Surface Finish

For laminate top/thermoplastic edge (L) or laminate top/universal edge (U)

76	light brown walnut	+$0
91	white	+$0
98	studio white	+$0
8Q	folkstone grey	+$0
CL	cool grey neutral	+$0
HF	inner tone light	+$0
HM	natural maple	+$0
HP	light anigre	+$0
HT	inner tone	+$0
HX	aged cherry	+$0
HY	walnut on cherry	+$0
LA	light ash	+$0
LBA	clear on ash	+$0
LBR	phantom ecru	+$0
LBS	phantom cocoa	+$0
LBU	medium matte walnut	+$0
LBV	warm grey teak	+$0
LBB	oak on ash	+$0
LBC	walnut on ash	+$0
LBD	dark brown walnut	+$0
LBF	neutral twill	+$0
LBG	sarum twill	+$0
LBH	earthen twill	+$0
LBJ	graphite twill	+$0
LBM	crisp linen	+$0
LBN	classic linen	+$0
LBP	casual linen	+$0
LBQ	white twill	+$0
LU	soft white	+$0
WL	sandstone	+$0
WN	warm grey neutral	+$0

Wood Veneer

For veneer (W)

2U	light brown walnut	+$55
40	dark brown walnut	+$55
ET	clear on ash	+$55
EU	oak on ash	+$55
EV	walnut on ash	+$55

Step 9. Edge Finish

For laminate top/thermoplastic edge (L)

76	light brown walnut	+$0
8Q	folkstone grey	+$0
91	white	+$0
98	studio white	+$0
CL	cool grey neutral	+$0
LA	light ash	+$0
LBA	clear on ash	+$0
LBR	phantom ecru	+$0
LBS	phantom cocoa	+$0
LBU	medium matte walnut	+$0
LBV	warm grey teak	+$0
LBB	oak on ash	+$0
LBC	walnut on ash	+$0
LBD	dark brown walnut	+$0
LBF	neutral twill	+$0
LBG	sarum twill	+$0
LBH	earthen twill	+$0
LBJ	graphite twill	+$0
LBK	pewter mesh	+$0
LBL	steel mesh	+$0
LBM	crisp linen	+$0
LBN	classic linen	+$0
LBP	casual linen	+$0
LBQ	white twill	+$0
WL	sandstone	+$0
WN	warm grey neutral	+$0
HF	inner tone light	+$0
HM	natural maple	+$0
HP	light anigre	+$0
HT	inner tone	+$0
HX	aged cherry	+$0
HY	walnut on cherry	+$0
LU	soft white	+$0

For laminate top/universal edge (U)

PLY	plywood edge A	+$50

Meeting End, Rectangular

GNTDG.
GNTDN.

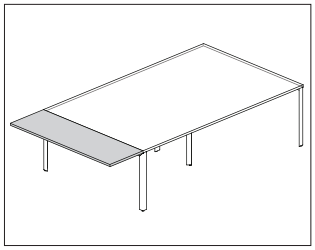

Product Information

Description

This 20″-deep squared-edge surface attaches to 2 sets of meeting end beams positioned at the end of a back-to-back bench application to create a meeting space. It has a laminate top with thermoplastic edge, laminate top with a thermoplastic backed plywood edge, or veneer top and edge. An optional grommet cut-out and grommet is available. Surface is 1 1/8″ thick.

Notes

Grommet color matches the laminate color for solid color laminates, and is graphite for all other laminates and veneers.

For each meeting end surface, order 2 fixed attachment hardware packs (GNHPF.) separately.

Dimensions

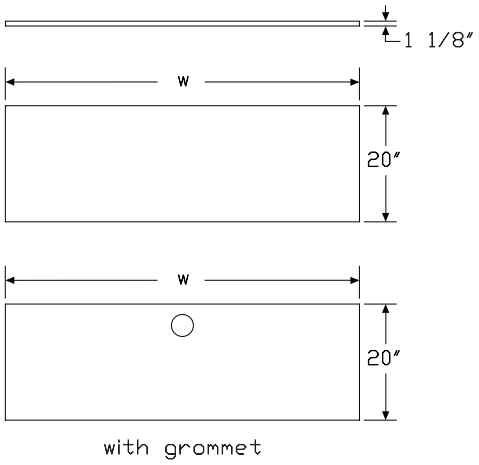

Specification Information

Step 1.

GN

Step 2. Type

TD rectangular meeting end

Step 3. Access Detail

N. no access cut-out
G. grommet

Step 4. Depth

20 20″ deep

Step 5. Width

48 48″ wide
60 60″ wide
72 72″ wide

Step 6. Attachment

F non-sliding

Step 7. Surface Material

L laminate top/thermoplastic edge
W veneer
U laminate top/universal edge

Prices for Steps 1-7.

		FL	FW	FU
GNTDN.20	**48**	$175	298	175
	60	$205	368	205
	72	$253	438	253
GNTDG.20	**48**	$196	317	196
	60	$226	388	226
	72	$274	458	274

Step 8. Surface Finish

For laminate top/thermoplastic edge (L) or laminate top/universal edge (U)

76	light brown walnut	+$0
91	white	+$0
98	studio white	+$0
8Q	folkstone grey	+$0
CL	cool grey neutral	+$0
HF	inner tone light	+$0
HM	natural maple	+$0
HP	light anigre	+$0
HT	inner tone	+$0
HX	aged cherry	+$0
HY	walnut on cherry	+$0
LA	light ash	+$0
LBA	clear on ash	+$0
LBR	phantom ecru	+$0
LBS	phantom cocoa	+$0
LBU	medium matte walnut	+$0
LBV	warm grey teak	+$0
LBB	oak on ash	+$0
LBC	walnut on ash	+$0
LBD	dark brown walnut	+$0
LBF	neutral twill	+$0
LBG	sarum twill	+$0
LBH	earthen twill	+$0
LBJ	graphite twill	+$0
LBM	crisp linen	+$0
LBN	classic linen	+$0
LBP	casual linen	+$0
LBQ	white twill	+$0
LU	soft white	+$0
WL	sandstone	+$0
WN	warm grey neutral	+$0

Wood Veneer

For veneer (W)

2U	light brown walnut	+$55
40	dark brown walnut	+$55
ET	clear on ash	+$55
EU	oak on ash	+$55
EV	walnut on ash	+$55

Step 9. Edge Finish

For laminate top/thermoplastic edge (L)

76	light brown walnut	+$0
8Q	folkstone grey	+$0
91	white	+$0
98	studio white	+$0
CL	cool grey neutral	+$0
LA	light ash	+$0
LBA	clear on ash	+$0
LBR	phantom ecru	+$0
LBS	phantom cocoa	+$0
LBU	medium matte walnut	+$0
LBV	warm grey teak	+$0
LBB	oak on ash	+$0
LBC	walnut on ash	+$0
LBD	dark brown walnut	+$0
LBF	neutral twill	+$0
LBG	sarum twill	+$0
LBH	earthen twill	+$0
LBJ	graphite twill	+$0
LBK	pewter mesh	+$0
LBL	steel mesh	+$0
LBM	crisp linen	+$0
LBN	classic linen	+$0
LBP	casual linen	+$0
LBQ	white twill	+$0
WL	sandstone	+$0
WN	warm grey neutral	+$0
HF	inner tone light	+$0
HM	natural maple	+$0
HP	light anigre	+$0
HT	inner tone	+$0
HX	aged cherry	+$0
HY	walnut on cherry	+$0
LU	soft white	+$0

For laminate top/universal edge (U)

PLY	plywood edge [A]	+$50

Primary Work Surface, 120°

GNTAD.
GNTAF.
GNTAG.
GNTAN.

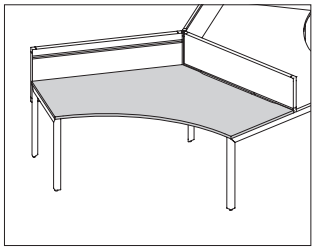

Product Information

Description

This squared-edge surface attaches to one set of 120° beams and Engage legs. It has a laminate top with thermoplastic edge, or a veneer top and edge. Surface is 1 1/8″ thick, and has several back edge options depending on application and access required.

Notes

When attaching a monitor arm or other item that clamps to the back edge of a surface, specify the flash gap (F) or flash gap and access door cutout (G).

The flash gap is 0.6″ deep and starts 7 5/8″ from each end. It is located on both wings of the surface.

Access door cutout is specified on the left or right wing. For surfaces with access door cutout, an access door (GNPD.) must be ordered separately.

Order fixed attachment hardware pack (GNHDF.) separately.

For quick release attachment, order quick release attachment hardware pack (GNHDA.) separately, in addition to the fixed attachment hardware pack (GNHDF.).

Dimensions

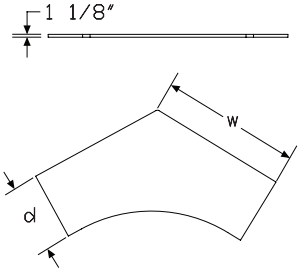

No Flash gap or Access door cutout

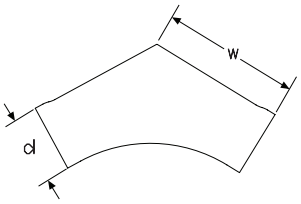

Flash gap

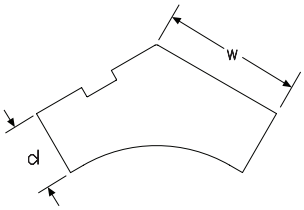

Access door cutout (Left Hand Version)

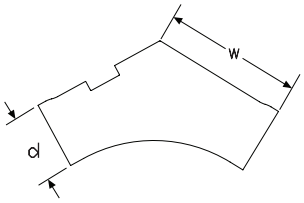

Flash gap and Access door cutout
(Left Hand Version)

Specification Information

Step 1.

GN

Step 2. Type

TA 120° primary surface

Step 3. Access Detail

D. access door cut-out A
G. flash gap and access door cut-out A
N. no flash gap or access door cut-out
F. flash gap

Step 4. Depth

24 24″ deep
30 30″ deep

Step 5. Width

48 48″ wide
54 54″ wide A
60 60″ wide

Step 6. Attachment

For no flash gap or access door cut-out (N.) or flash gap (F.)

F no access door cutout, non-sliding

For access door cut-out (D.) or flash gap and access door cut-out (G.)

L left-hand access, non-sliding
R right-hand access, non-sliding

Step 7. Surface Material

L laminate top/thermoplastic edge
W veneer

Prices for Steps 1-7.

		FL	FW	LL	LW	RL	RW
GNTAD.24	**48**	—	—	$458	783	458	783
	54	—	—	$481	816	481	816
	60	—	—	$595	1013	595	1013
30	**48**	—	—	$468	803	468	803
	54	—	—	$493	837	493	837
	60	—	—	$607	1036	607	1036
GNTAG.24	**48**	—	—	$515	850	515	850
	54	—	—	$534	882	534	882
	60	—	—	$665	1095	665	1095
30	**48**	—	—	$526	869	526	869
	54	—	—	$545	901	545	901
	60	—	—	$677	1120	677	1120
GNTAN.24	**48**	$463	808	—	—	—	—
	54	$488	844	—	—	—	—
	60	$603	1047	—	—	—	—
30	**48**	$474	828	—	—	—	—
	54	$500	863	—	—	—	—
	60	$617	1070	—	—	—	—
GNTAF. 24	**48**	$508	851	—	—	—	—
	54	$528	884	—	—	—	—
	60	$657	1099	—	—	—	—
30	**48**	$518	873	—	—	—	—
	54	$538	904	—	—	—	—
	60	$670	1124	—	—	—	—

Step 8. Surface Finish		
For laminate top/thermoplastic edge (L)		
76	light brown walnut	+$0
91	white	+$0
98	studio white	+$0
8Q	folkstone grey	+$0
CL	cool grey neutral	+$0
HF	inner tone light	+$0
HM	natural maple	+$0
HP	light anigre	+$0
HT	inner tone	+$0
HX	aged cherry	+$0
HY	walnut on cherry	+$0
LA	light ash	+$0
LBA	clear on ash	+$0
LBR	phantom ecru	+$0
LBS	phantom cocoa	+$0
LBU	medium matte walnut	+$0
LBV	warm grey teak	+$0
LBB	oak on ash	+$0
LBC	walnut on ash	+$0
LBD	dark brown walnut	+$0
LBF	neutral twill	+$0
LBG	sarum twill	+$0
LBH	earthen twill	+$0
LBJ	graphite twill	+$0
LBM	crisp linen	+$0
LBN	classic linen	+$0
LBP	casual linen	+$0
LBQ	white twill	+$0
LU	soft white	+$0
WL	sandstone	+$0
WN	warm grey neutral	+$0

Wood Veneer		
For veneer (W)		
2U	light brown walnut	+$55
40	dark brown walnut	+$55
ET	clear on ash	+$55
EU	oak on ash	+$55
EV	walnut on ash	+$55

Step 9. Edge Finish		
For laminate top/thermoplastic edge (L)		
76	light brown walnut	+$0
8Q	folkstone grey	+$0
91	white	+$0
98	studio white	+$0
CL	cool grey neutral	+$0
HF	inner tone light	+$0
HM	natural maple	+$0
HP	light anigre	+$0
HT	inner tone	+$0
HX	aged cherry	+$0
HY	walnut on cherry	+$0
LA	light ash	+$0
LBA	clear on ash	+$0
LBR	phantom ecru	+$0
LBS	phantom cocoa	+$0
LBU	medium matte walnut	+$0
LBV	warm grey teak	+$0
LBB	oak on ash	+$0
LBC	walnut on ash	+$0
LBD	dark brown walnut	+$0
LBF	neutral twill	+$0
LBG	sarum twill	+$0
LBH	earthen twill	+$0
LBJ	graphite twill	+$0
LBK	pewter mesh	+$0
LBL	steel mesh	+$0
LBM	crisp linen	+$0
LBN	classic linen	+$0
LBP	casual linen	+$0
LBQ	white twill	+$0
LU	soft white	+$0
WL	sandstone	+$0
WN	warm grey neutral	+$0

Hardware Pack, Fixed Surfaces

GNHDF.
GNHPF.
GNHSF.

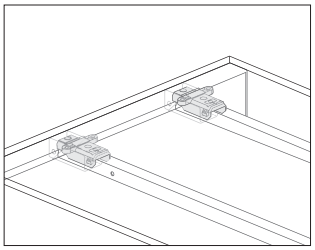

Product Information

Description

This hardware pack is required in order to connect a set of beams to a pair of Engage legs, and to provide a fixed attachment of a surface.

Notes

1 hardware pack is required for each beam kit specified. Meeting end surfaces (GNTDG., GNTDN.) require an additional 2 rectangular primary hardware packs (GNHPF.) per surface.

For quick release attachment, a quick release hardware pack (GNHPA., GNHDA.) can be added. Specify 1 hardware pack for each beam kit.

Specification Information

Step 1.

GNH

Step 2. Type

PF.	rectangular primary
DF.	120° - primary
SF.	return

Prices for Steps 1-2.

GNHPF.	$52
GNHDF.	$115
GNHSF.	$137

Hardware Pack, Quick Release Attachment

GNHDA.
GNHPA.

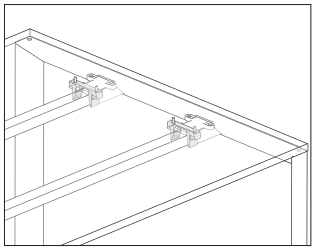

Product Information

Description

This hardware pack provides for the attachment and removal of surfaces without the use of any tools.

Notes

Specify 1 quick release hardware pack for each fixed attachment hardware pack (GNHDF., GNHPF., GNHSF.) specified.

Dimensions

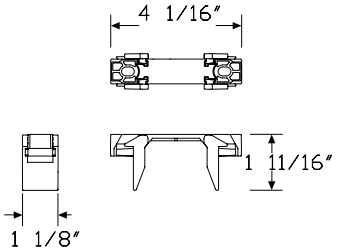

Specification Information

Step 1.

GNH

Step 2. Type

PA. rectangular surface

DA. 120° surface

Prices for Steps 1-2.

GNHPA.	$18
GNHDA.	$27

Hardware Pack - Sliding - Rectangular Primary

GNHRS.

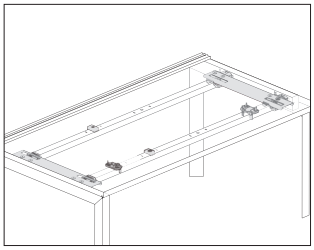

Product Information

Description

This hardware pack attaches a 24"-deep or 30"-deep rectangular primary surface to a set of beams when using a performance rail or when using a non-rail surface with the generic attachment option. It allows the surface to slide, providing access to a cable management tray.

Notes

Specify 1 hardware pack for each sliding surface.

Attaching clamp-mounted components to the back edge of a sliding surface may result in reduced surface extension.

Dimensions

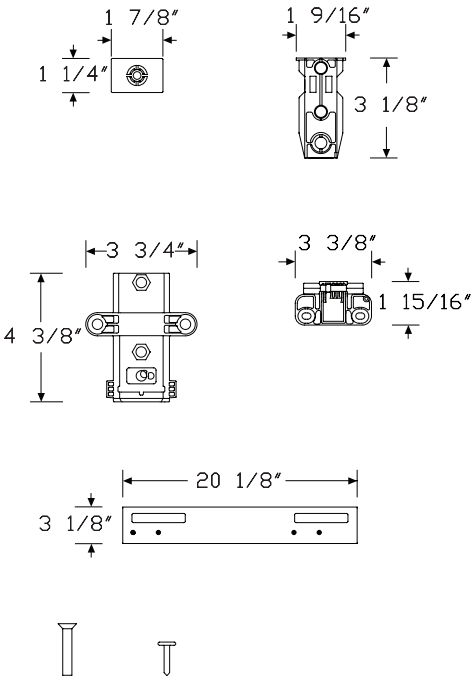

Specification Information

Step 1.

GNHRS. A

Step 2. Depth

24	for 24"-deep surface A	
30	for 30"-deep surface A	

Prices for Steps 1-2.

GNHRS.	**24**	$198
	30	$198

Pari Screen, Desk Up GNSDXT

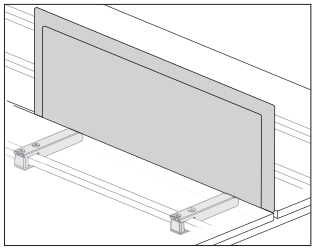

Product Information

Description

This frameless tackable fabric screen provides boundary above a surface at the back edge of a work surface in a back-to-back application. Attachment hardware included.

Notes

Screen width does not need to match beam width.

Extended width screens (GNSDXT.xxxxA) are available for use in 120° applications only. These screens are slightly wider than standard width screens and fill the gap created at the back corner where surfaces meet.

Screen attaches to rear beam with brackets supplied with screen. No additional hardware is needed.

Screen is shared in back-to-back applications.

Each screen ships with an alignment clip for use between screens when placed side-by-side.

All fabric is railroaded.

Screen accepts Customer's Own Material (COM). Yardage is estimated for nondirectional 54"-wide fabrics.

Width—Yardage

36—1.32
39—1.43
42—1.51
48—1.71
54—1.90
60—2.07
66—2.27
72—2.46

For information on multiple quantities or directional fabrics, contact COM Department. See Order Information in Appendices.

Dimensions

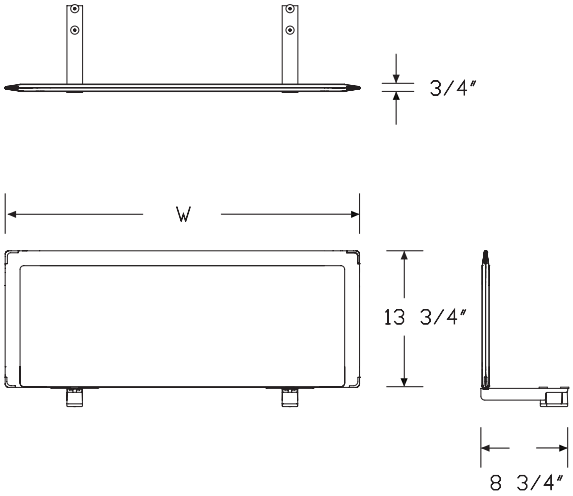

Specification Information

Step 1.

GN

Step 2. Type

SD desk up

Step 3. Configuration

X frameless

Step 4. Material

T. tackable fabric with tapered edge

Step 5. Height

42 42″ high
46 46″ high

Step 6. Width

36 36″ wide
39 39″ wide
42 42″ wide
48 48″ wide
54 54″ wide
60 60″ wide
66 66″ wide
72 72″ wide
48A 48″ wide, for use with 120-degree corner A
54A 54″ wide, for use with 120-degree corner A
60A 60″ wide, for use with 120-degree corner A

Prices for Steps 1-6.

		36	39	42	48	54	60
GNSDXT.	**42**	$630	668	689	719	759	802
	46	$646	685	704	735	776	822

		66	72	48A	54A	60A
GNSDXT.	**42**	$847	880	719	759	802
	46	$862	903	735	776	822

Step 7. Paint Finish

Metallic Paint

MS metallic silver +$0

Sand Texture Paint

91 white +$0
98 studio white +$0
BK black +$0
G1 graphite +$0

Step 8. Surface Finish

See application chart and textiles list for fabric usage and numbers. First 2 digits of number indicate fabric line; remaining digit(s) indicate fabric color.

	36	39	42	48	54
Price Category C	+$70	70	70	70	70
Price Category 1	+$0	0	0	0	0
Price Category 2	+$11	11	11	15	15
Price Category 3	+$27	27	27	36	36
Price Category 4	+$46	46	46	62	62
Price Category E	+$106	106	106	142	142

	60	66	72	48A	54A
Price Category C	+$70	70	70	70	75
Price Category 1	+$0	0	0	0	0
Price Category 2	+$15	15	15	15	18
Price Category 3	+$36	36	36	36	44
Price Category 4	+$62	62	62	62	76
Price Category E	+$142	142	142	142	174

	60A
Price Category C	+$75
Price Category 1	+$0
Price Category 2	+$18
Price Category 3	+$44
Price Category 4	+$76
Price Category E	+$174

Flat Edge Screen, Desk Up GNSDXS

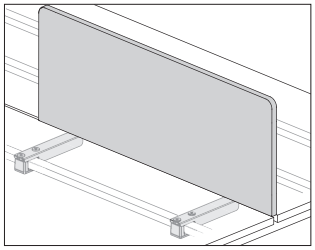

Product Information

Description

This tackable frameless fabric screen provides boundary above a surface at the back edge of the work surface in a back-to-back application. It has a flat edge and comes with an alignment clip to align 2 screens when placed side-by-side. Attachment hardware included.

Notes

Screen width does not need to match beam width.

Screen attaches to rear beam with provided brackets. No additional hardware is required.

When using 78″-wide beams, specify 2 39″-wide screens to provide full screen coverage. When using 84″-wide beams, specify 2 42″-wide screens. When using 96″-wide beams, specify 2 48″-wide screens.

When using screens with 120° beams/surfaces, specify screen widths with the A suffix (48A, 54A, 60A). These screens are slightly wider than their nominal width in order to fill the gap created at the back corner between 2 or 3 120° surfaces.

Screen is shared in back-to-back applications.

All fabric is railroaded.

Screen accepts Customer's Own Material (COM). Yardage is estimated for nondirectional 54″-wide fabrics.

Width—Yardage

36—1.32
39—1.42
42—1.51
48—1.70
54—1.89
60—2.08
66—2.27
72—2.46

For information on multiple quantities or directional fabrics, contact COM Department. See Order Information in Appendices.

Dimensions

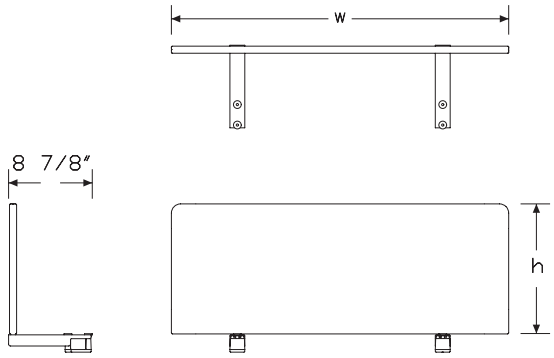

Specification Information

Step 1.

GN A

Step 2. Type

SD desk up A

Step 3. Configuration

X frameless A

Step 4. Material

S. tackable fabric with flat edge A

Step 5. Height

42 42″ high A
46 46″ high A

Step 6. Width

36 36″ wide A
39 39″ wide A
42 42″ wide A
48 48″ wide A
48A 48″ wide, for use with 120-degree corner A
54 54″ wide A
54A 54″ wide, for use with 120-degree corner A
60 60″ wide A
60A 60″ wide, for use with 120-degree corner A
66 66″ wide A
72 72″ wide A

Prices for Steps 1-6.

		36	39	42	48	48A	54
GNSDXS.	**42**	$357	377	397	418	418	439
	46	$373	392	413	434	434	458

		54A	60	60A	66	72
GNSDXS.	**42**	$439	459	459	484	510
	46	$458	482	482	501	532

Step 7. Paint Finish

Metallic Paint

MS	metallic silver A	+$0

Sand Texture Paint

91	white A	+$0
98	studio white A	+$0
BK	black A	+$0
G1	graphite A	+$0

Step 8. Surface Finish

Price Category C	+$88
Price Category 1	+$0
Price Category 2	+$12
Price Category 3	+$20
Price Category 4	+$32
Price Category E	+$136

Layout Studio® Laminate Screen, Desk Up

GNSDL.
GNSDU.

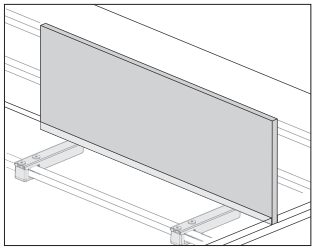

Product Information

Description

This laminate screen provides boundary above a surface at the back edge of a work surface in a back-to-back application. Attachment hardware included.

Notes

Screen attaches to rear beam with included brackets. No additional hardware is needed.

Screen is shared in back-to-back applications.

To align screens in a run and display name tags, order Ubi nametag clip (Y1121.) separately and place over the seam between laminate screens.

Specify screen width to match beam width.

Dimensions

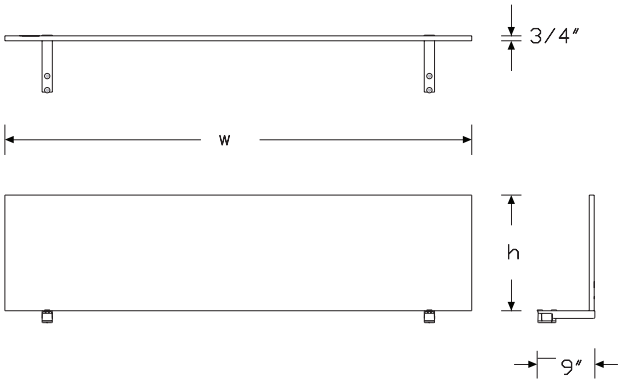

Specification Information

Step 1.

GN A

Step 2. Type

SD desk up A

Step 3. Surface Material

L. laminate/thermoplastic edge
U. laminate/universal edge

Step 4. Height

42 42″ high
46 46″ high

Step 5. Width

36 36″ wide A
39 39″ wide A
42 42″ wide A
48 48″ wide A
48A 48″ wide, for use with 120-degree corner A
54 54″ wide A
54A 54″ wide, for use with 120-degree corner A
60 60″ wide A
60A 60″ wide, for use with 120-degree corner A
66 66″ wide A
72 72″ wide A

Prices for Steps 1-5.

		36	39	42	48	48A	54
GNSDL.	**42**	$265	283	300	317	317	334
	46	$283	300	317	334	334	352

		54A	60	60A	66	72
GNSDL.	**42**	$334	352	352	360	367
	46	$352	369	369	377	384

GNSDU.	**42**	$265	283	300	317	317	334
	46	$283	300	317	334	334	352

		54A	60	60A	66	72
GNSDU.	**42**	$334	352	352	360	367
	46	$352	369	369	377	384

Step 6. Grain Direction		
For 36" wide (36), 39" wide (39), 42" wide (42), 48" wide (48), 48" wide, for use with 120-degree corner (48A), 54" wide (54), 54" wide, for use with 120-degree corner (54A), 60" wide (60), or 60" wide, for use with 120-degree corner (60A)		
VTG	vertical grain A	+$0
HRG	horizontal grain A	+$0
For 66" wide (66) or 72" wide (72)		
HRG	horizontal grain A	+$0

Step 7. Bracket Finish		
Metallic Paint		
MS	metallic silver	+$0
Sand Texture Paint		
91	white	+$0
98	studio white	+$0
BK	black	+$0
G1	graphite	+$0

Step 8. Surface Material		
76	light brown walnut	+$0
8Q	folkstone grey	+$0
91	white	+$0
98	studio white	+$0
CL	cool grey neutral	+$0
HM	natural maple	+$0
HP	light anigre	+$0
HX	aged cherry	+$0
HY	walnut on cherry	+$0
LA	light ash	+$0
LBA	clear on ash	+$0
LBB	oak on ash	+$0
LBC	walnut on ash	+$0
LBD	dark brown walnut	+$0
LBF	neutral twill	+$0
LBG	sarum twill	+$0
LBH	earthen twill	+$0
LBJ	graphite twill	+$0
LBK	pewter mesh	+$0
LBL	steel mesh	+$0
LBM	crisp linen	+$0
LBN	classic linen	+$0
LBP	casual linen	+$0
LBQ	white twill	+$0
LBR	phantom ecru	+$0
LBS	phantom cocoa	+$0
LBU	medium matte walnut	+$0
LBV	warm grey teak	+$0
LU	soft white	+$0
WL	sandstone	+$0
WN	warm grey neutral	+$0
X1	chalk white	+$0

Layout Studio® Laminate Screen, Desk Up *continued*

Step 9. Edge Finish		
For laminate/thermoplastic edge (L.)		
76	light brown walnut	+$0
8Q	folkstone grey	+$0
91	white	+$0
98	studio white	+$0
BU	black umber	+$0
CL	cool grey neutral	+$0
HF	inner tone light	+$0
HM	natural maple	+$0
HP	light anigre	+$0
HX	aged cherry	+$0
HY	walnut on cherry	+$0
LA	light ash	+$0
LBA	clear on ash	+$0
LBR	phantom ecru	+$0
LBS	phantom cocoa	+$0
LBU	medium matte walnut	+$0
LBV	warm grey teak	+$0
LBB	oak on ash	+$0
LBC	walnut on ash	+$0
LBD	dark brown walnut	+$0
LBF	neutral twill	+$0
LBG	sarum twill	+$0
LBH	earthen twill	+$0
LBJ	graphite twill	+$0
LBK	pewter mesh	+$0
LBL	steel mesh	+$0
LBM	crisp linen	+$0
LBN	classic linen	+$0
LBP	casual linen	+$0
LBQ	white twill	+$0
LU	soft white	+$0
MT	medium tone	+$0
WL	sandstone	+$0
WN	warm grey neutral	+$0
For laminate/universal edge (U.)		
PLY	plywood edge	+$50

Framed Screen, Desk Up

GNSDFT
GNSDNT
GNSDTT

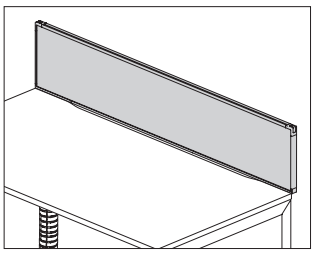

Product Information

Description

This fabric screen provides boundary above a surface at the back edge of a work surface. It is tackable, has a painted metal frame, and provides varying levels of work tool attachment.

The screen can be placed most anywhere along the beam and does not need to match beam widths.

Notes

Screen attaches to rear beam with brackets. Order desk up attachment brackets (GNSA.) separately.

For top rail and face rail hanging screens, levelers should be applied to each work tool to ensure that the tool hangs properly. Each screen ships with enough levelers for 4 work tools. Additional levelers are available as a service part (U1BDV55).

For top rail and face rail hanging screens, a maximum of 2 work tools can be used per side.

For top rail and face rail hanging screens, see Layout Studio planning guide for work tool compatibility.

Order the following finishing hardware and connectors separately:

- Connector finishing kit (GNSE.)
- In-line connector kit (GNSH.)
- Post connector kit (GNSJ.)

When used in a back-to-back application, the screen is shared.

All fabric is railroaded.

Screen accepts Customer's Own Material (COM). Yardage is estimated for nondirectional 54″-wide fabrics.

Width—Yardage
36—1.23
42—1.41
48—1.61
54—1.80
60—1.99
66—2.18
72—2.37

For information on multiple quantities or directional fabrics, contact COM Department. See Order Information in Appendices.

Dimensions

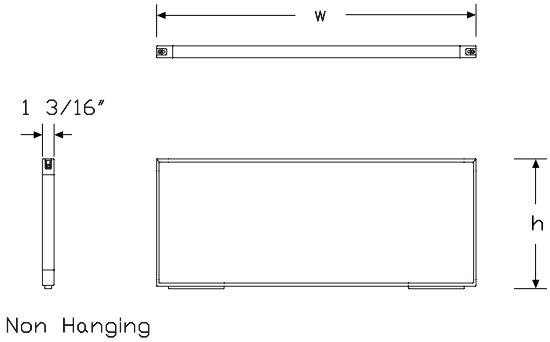

Non Hanging

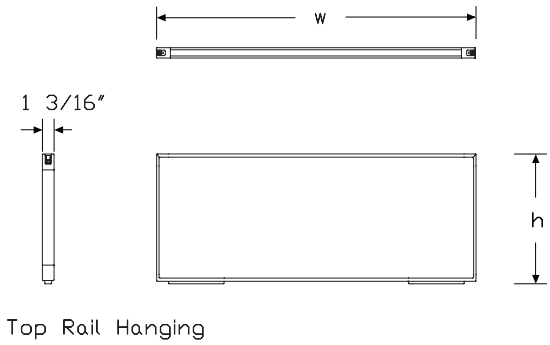

Top Rail Hanging

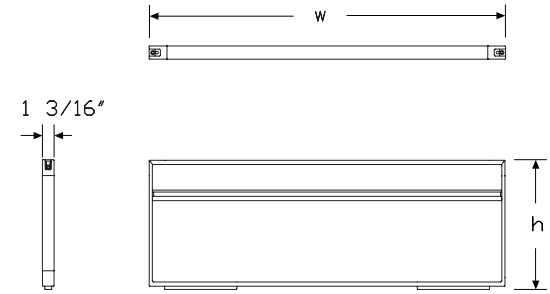

Face Rail Hanging

Specification Information

Step 1.

GN

Step 2. Type

SD	desk up

Step 3. Configuration

N	non hanging
T	top rail hanging
F	face rail hanging

Step 4. Material

T.	tackable fabric

Step 5. Height

42	42″ high
46	46″ high

Step 6. Width

36	36″ wide
42	42″ wide
48	48″ wide
54	54″ wide A
60	60″ wide
66	66″ wide A
72	72″ wide

Prices for Steps 1-6.

		36	42	48	54	60	66
GNSDNT.	**42**	$401	449	473	594	537	676
	46	$414	461	484	612	553	689

		72
GNSDNT.	**42**	$601
	46	$619

GNSDTT.	**42**	$398	447	470	589	534	672
	46	$412	459	481	608	550	685

		72
GNSDTT.	**42**	$597
	46	$615

GNSDFT.	**42**	$543	611	673	703	733	814
	46	$556	628	694	721	749	830

		72
GNSDFT.	**42**	$895
	46	$914

Step 7. Trim Finish

MS	metallic silver	+$0
BK	black	+$0
91	white	+$0
98	studio white	+$0
G1	graphite	+$0

Step 8. Surface Finish

See application chart and textiles list for fabric usage and numbers. First 2 digits of number indicate fabric line; remaining digit(s) indicate fabric color.

Price Category C	+$0
Price Category 1	+$0
Price Category 2	+$10
Price Category 3	+$24
Price Category 4	+$42
Price Category 5	+$70

Glass Screen, Desk Up, Frameless GNSDXG

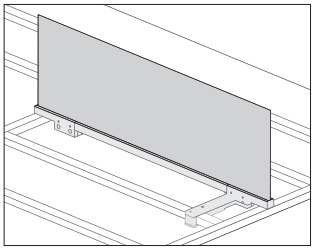

Product Information

Description

This frameless glass screen provides boundary above a surface at the back edge of a work surface in a back-to-back application. It has a painted metal frame. Attachment hardware included.

Notes

Screen attaches to rear beam with brackets supplied with screen. No additional hardware is needed.

Screen is shared and must be used in a back-to-back application.

Dimensions

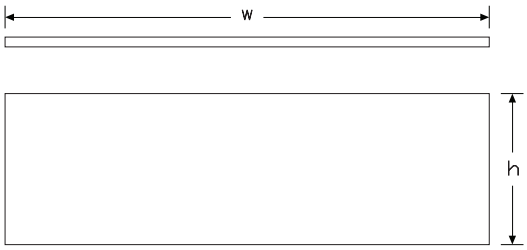

Specification Information

Step 1.

GN

Step 2. Type

SD	desk up

Step 3. Configuration

X	frameless

Step 4. Material

G.	glass

Step 5. Height

42	42″ high
46	46″ high

Step 6. Width

36	36″ wide
42	42″ wide
48	48″ wide
54	54″ wide A
60	60″ wide
66	66″ wide A
72	72″ wide
78	78″ wide A
84	84″ wide
96	96″ wide

Step 7. Surface Finish

TR	clear glass - 1/4″ thick
5A	opal etched - 1/4″ thick
NN	no glass- for customer's own 1/4 thick glass
C3	clear glass - 3/8″ thick
G3	opal glass - 3/8″ thick
N3	no glass, for customer's own 3/8″ thick glass

Glass Screen, Desk Up, Frameless

continued

Prices for Steps 1-7.							
		TR	**5A**	**NN**	**C3**	**G3**	**N3**
GNSDXG. 42	**36**	$455	533	331	533	623	331
	42	$477	571	354	565	673	354
	48	$500	606	370	602	731	370
	54	$531	649	393	647	789	393
	60	$559	689	417	688	849	417
	66	$595	731	441	726	894	441
	72	$629	773	464	764	938	464
	78	$668	816	491	808	987	491
	84	$1073	1280	792	1269	1512	792
	96	$1122	1361	829	1353	1644	829
46	**36**	$475	577	331	608	698	331
	42	$502	618	354	611	754	354
	48	$527	663	370	659	829	370
	54	$562	715	393	704	898	393
	60	$597	771	417	749	966	417
	66	$632	826	441	806	1051	441
	72	$668	882	464	860	1136	464
	78	$705	937	491	916	1225	491
	84	$1128	1390	792	1374	1695	792
	96	$1183	1489	829	1481	1865	829

Step 8. Trim Finish

Metallic Paint		
MS	metallic silver	+$0

Sand Texture Paint		
BK	black	+$0

Smooth Paint		
91	white	+$0
98	studio white	+$0
G1	graphite	+$0

Pari Screen, Modesty GNSMXT

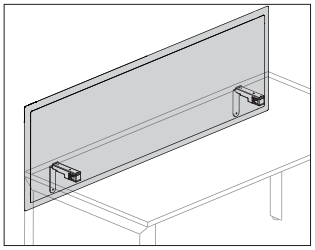

Product Information

Description

This frameless tackable fabric screen provides boundary above and below a surface at the back edge of a work surface in a single-sided application or on a return surface. Attachment hardware included.

Notes

Screen width does not need to match beam width.

Extended width screens (GNSMXT.xxxxA) are available for use in 120° applications only. These screens are slightly wider than standard width screens and fill the gap created at the back corner where surfaces meet.

Screen attaches to rear beam with brackets that are provided; no additional attachment hardware is required.

Screen will hang approximately 9 3/4″ below the surface.

Each screen ships with an alignment clip for use between screens when placed side-by-side.

All fabric is railroaded.

Screen accepts Customer's Own Material (COM). Yardage is estimated for nondirectional 54″-wide fabrics.

Width—Yardage
36—2.66
39—2.83
42—3.02
48—3.41
54—3.78
60—4.17
66—4.54
72—4.92

For information on multiple quantities or directional fabrics, contact COM Department. See Order Information in Appendices.

Dimensions

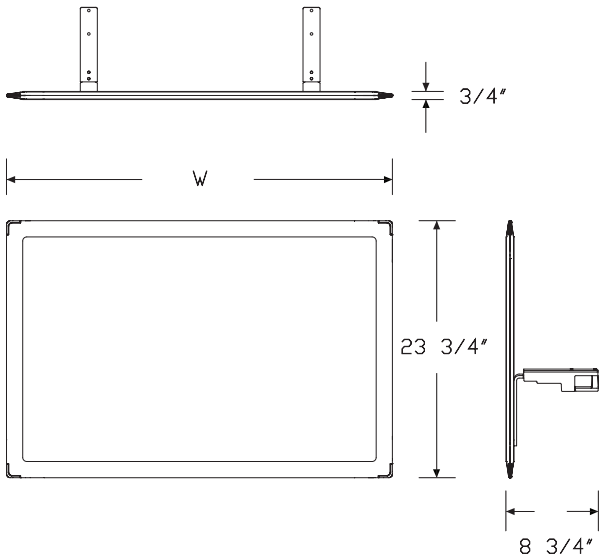

Specification Information

Step 1.

GN

Step 2. Type

SM modesty

Step 3. Configuration

X frameless

Step 4. Material

T. tackable fabric with tapered edge

Step 5. Height

42 42″ high
46 46″ high

Step 6. Width

36 36″ wide
39 39″ wide
42 42″ wide
48 48″ wide
54 54″ wide
60 60″ wide
66 66″ wide
72 72″ wide
48A 48″ wide, for use with 120-degree corner A
54A 54″ wide, for use with 120-degree corner A
60A 60″ wide, for use with 120-degree corner A

Prices for Steps 1-6.

	36	39	42	48	54	60
GNSMXT. 42	$670	712	734	764	807	850
46	$687	729	750	780	827	875

	66	72	48A	54A	60A
GNSMXT. 42	$900	937	764	807	850
46	$917	961	780	827	875

Step 7. Paint Finish

Metallic Paint

MS metallic silver +$0

Sand Texture Paint

BK black +$0

Smooth Paint

91 white +$0
98 studio white +$0
G1 graphite +$0

Step 8. Surface Finish

See application chart and textiles list for fabric usage and numbers. First 2 digits of number indicate fabric line; remaining digit(s) indicate fabric color.

	36	39	42	48	54
Price Category C	+$70	70	70	70	70
Price Category 1	+$0	0	0	0	0
Price Category 2	+$22	22	22	29	29
Price Category 3	+$53	53	53	70	70
Price Category 4	+$92	92	92	122	122
Price Category E	+$211	211	211	280	280

	60	66	72	48A	54A
Price Category C	+$70	70	70	70	75
Price Category 1	+$0	0	0	0	0
Price Category 2	+$29	29	29	29	37
Price Category 3	+$70	70	70	70	89
Price Category 4	+$122	122	122	122	155
Price Category E	+$280	280	280	280	355

	60A
Price Category C	+$75
Price Category 1	+$0
Price Category 2	+$37
Price Category 3	+$89
Price Category 4	+$155
Price Category E	+$355

Flat Edge Screen, Modesty GNSMXS

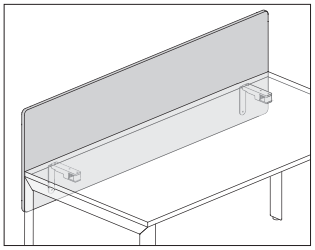

Product Information

Description

This tackable frameless fabric screen provides boundary above and below a surface at the back edge of the work surface in a single-sided application or on a return surface. It has a flat edge and comes with an alignment clip to align 2 screens when placed side-by-side. Attachment hardware included.

Notes

Screen width does not need to match beam width.

Screen attaches to rear beam with provided brackets. No additional hardware is required.

Screen extends approximately 9½" below the surface.

When using 78"-wide beams, specify 2 39"-wide screens to provide full screen coverage. When using 84"-wide beams, specify 2 42"-wide screens. When using 96"-wide beams, specify 2 48"-wide screens.

All fabric is railroaded.

Screen accepts Customer's Own Material (COM). Yardage is estimated for nondirectional 54"-wide fabrics.

For 42" high:

Width—Yardage

36—1.32
39—1.42
42—1.51
48—1.70
54—1.89
60—2.08
66—2.27
72—2.46

For 46" high:

Width—Yardage

36—2.65
39—2.84
42—3.02
48—3.40
54—3.78
60—4.16
66—4.54
72—4.91

For information on multiple quantities or directional fabrics, contact COM Department. See Order Information in Appendices.

Dimensions

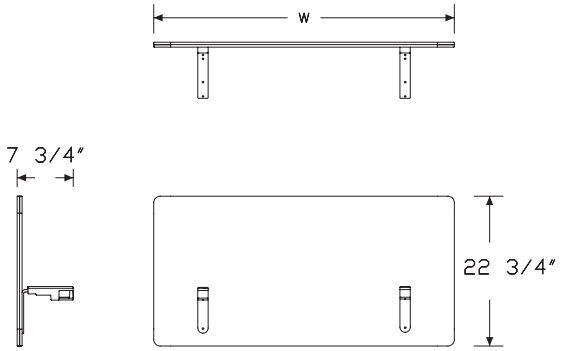

Specification Information

Step 1.

GN A

Step 2. Type

SM modesty A

Step 3. Configuration

X frameless A

Step 4. Material

S. tackable fabric with flat edge A

Step 5. Height

42 42" high A
46 46" high A

Step 6. Width

36 36" wide A
39 39" wide A
42 42" wide A
48 48" wide A
48A 48" wide, for use with 120-degree corner A
54 54" wide A
54A 54" wide, for use with 120-degree corner A
60 60" wide A
60A 60" wide, for use with 120-degree corner A
66 66" wide A
72 72" wide A

Prices for Steps 1-6.

		36	39	42	48	48A	54
GNSMXS.	**42**	$512	535	557	580	580	602
	46	$529	550	573	595	595	622

		54A	60	60A	66	72
GNSMXS.	**42**	$602	625	625	656	686
	46	$622	649	649	672	708

Step 7. Paint Finish

Metallic Paint

MS metallic silver A +$0

Sand Texture Paint

91 white A +$0
98 studio white A +$0
BK black A +$0
G1 graphite A +$0

Step 8. Surface Finish

Price Category C +$89
Price Category 1 +$0
Price Category 2 +$12
Price Category 3 +$20
Price Category 4 +$32
Price Category E +$136

Layout Studio® Laminate Screen, Modesty

GNSML.
GNSMU.

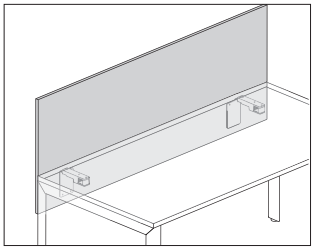

Product Information

Description

This laminate screen provides boundary above and below a surface at the back edge of the work surface in a single-sided application or on a return surface. Attachment hardware included.

Notes

Screen width does not need to match beam width.

Screen attaches to rear beam with included brackets. No additional hardware is needed.

Screen extends approximately 10 1/8" below the surface.

When using 78"-wide beams, specify 2 39"-wide screens to provide full screen coverage. When using 84"-wide beams, specify 2 42"-wide screens. When using 96"-wide beams, specify 2 48"-wide screens.

To align screens in a run and display name tags, order Ubi nametag clip (Y1121.) separately and place over the seam between laminate screens.

Dimensions

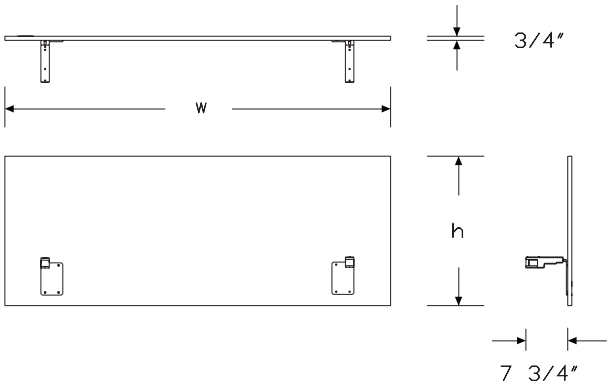

Specification Information

Step 1.

GN A

Step 2. Type

SM modesty A

Step 3. Surface Material

L. laminate/thermoplastic edge A

U. laminate/universal edge A

Step 4. Height

42 42" high A

46 46" high A

Step 5. Width

36 36" wide A

39 39" wide A

42 42" wide A

48 48" wide A

48A 48" wide, for use with 120-degree corner A

54 54" wide A

54A 54" wide, for use with 120-degree corner A

60 60" wide A

60A 60" wide, for use with 120-degree corner A

66 66" wide A

72 72" wide A

Prices for Steps 1-5.

		36	39	42	48	48A	54
GNSML.	**42**	$329	339	350	360	360	370
	46	$349	359	369	379	379	389

		54A	60	60A	66	72
GNSML.	**42**	$370	380	380	393	405
	46	$389	399	399	412	425

GNSMU.	**42**	$329	339	350	360	360	370
	46	$349	359	369	379	379	389

		54A	60	60A	66	72
GNSMU.	**42**	$370	380	380	393	405
	46	$389	399	399	412	425

Step 6. Grain Direction		
For 36" wide (36), 39" wide (39), 42" wide (42), 48" wide (48), 48" wide, for use with 120-degree corner (48A), 54" wide (54), 54" wide, for use with 120-degree corner (54A), 60" wide (60), or 60" wide, for use with 120-degree corner (60A)		
VTG	vertical grain A	+$0
HRG	horizontal grain A	+$0
For 66" wide (66) or 72" wide (72)		
HRG	horizontal grain A	+$0

Step 7. Bracket Finish		
Metallic Paint		
MS	metallic silver A	+$0
Sand Texture Paint		
BK	black A	+$0
Smooth Paint		
91	white A	+$0
98	studio white A	+$0
G1	graphite A	+$0

Step 8. Surface Finish		
76	light brown walnut A	+$0
8Q	folkstone grey A	+$0
91	white A	+$0
98	studio white A	+$0
CL	cool grey neutral A	+$0
HM	natural maple A	+$0
HP	light anigre A	+$0
HX	aged cherry A	+$0
HY	walnut on cherry A	+$0
LA	light ash A	+$0
LBA	clear on ash A	+$0
LBB	oak on ash A	+$0
LBC	walnut on ash A	+$0
LBD	dark brown walnut A	+$0
LBF	neutral twill A	+$0
LBG	sarum twill A	+$0
LBH	earthen twill A	+$0
LBJ	graphite twill A	+$0
LBK	pewter mesh A	+$0
LBL	steel mesh A	+$0
LBM	crisp linen A	+$0
LBN	classic linen A	+$0
LBP	casual linen A	+$0
LBQ	white twill A	+$0
LBR	phantom ecru A	+$0
LBS	phantom cocoa A	+$0
LBU	medium matte walnut A	+$0
LBV	warm grey teak A	+$0
LU	soft white A	+$0
WL	sandstone A	+$0
WN	warm grey neutral A	+$0
X1	chalk white A	+$0

Layout Studio® Laminate Screen, Modesty *continued*

Step 9. Edge Finish

For laminate/thermoplastic edge (L.)

76	light brown walnut A	+$0
8Q	folkstone grey A	+$0
91	white A	+$0
98	studio white A	+$0
BU	black umber A	+$0
CL	cool grey neutral A	+$0
HF	inner tone light A	+$0
HM	natural maple A	+$0
HP	light anigre A	+$0
HX	aged cherry A	+$0
HY	walnut on cherry A	+$0
LA	light ash A	+$0
LBA	clear on ash A	+$0
LBR	phantom ecru A	+$0
LBS	phantom cocoa A	+$0
LBU	medium matte walnut A	+$0
LBV	warm grey teak A	+$0
LBB	oak on ash A	+$0
LBC	walnut on ash A	+$0
LBD	dark brown walnut A	+$0
LBF	neutral twill A	+$0
LBG	sarum twill A	+$0
LBH	earthen twill A	+$0
LBJ	graphite twill A	+$0
LBK	pewter mesh A	+$0
LBL	steel mesh A	+$0
LBM	crisp linen A	+$0
LBN	classic linen A	+$0
LBP	casual linen A	+$0
LBQ	white twill A	+$0
LU	soft white A	+$0
MT	medium tone A	+$0
WL	sandstone A	+$0
WN	warm grey neutral A	+$0

For laminate/universal edge (U.)

PLY	plywood edge A	+$50

Framed Screen, Modesty GNSMNT

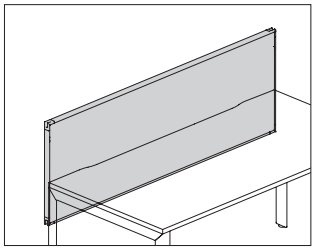

Product Information

Description

This fabric screen provides boundary above and below a surface in a single-sided application or return surface, at the back edge of a work surface. It is tackable and has a painted metal frame.

The screen can be placed most anywhere along the beam and does not need to match beam widths.

Notes

Screen attaches to rear beam with brackets. Order modesty attachment brackets (GNSB.) separately.

Screen will hang approximately 9¾" below the surface.

Order the following finishing hardware and connectors separately:

- Connector finishing kit (GNSE.)
- In-line connector kit (GNSH.)
- Post connector kit (GNSJ.)

Not recommended for a back-to-back application.

All fabric is railroaded.

Screen accepts Customer's Own Material (COM). Yardage is estimated for nondirectional 54"-wide fabrics.

Width—Yardage

36—1.23
42—1.41
48—1.61
54—1.80
60—1.99
66—2.18
72—2.37
78—2.55

For information on multiple quantities or directional fabrics, contact COM Department. See Order Information in Appendices.

Dimensions

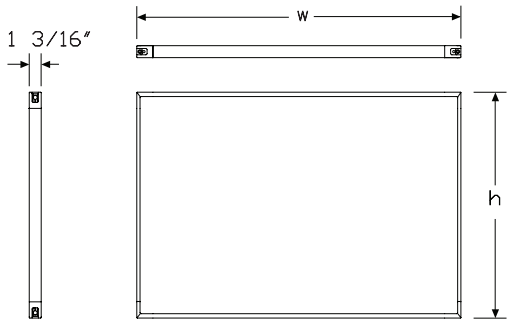

Specification Information

Step 1.

GN

Step 2. Type

SM modesty

Step 3. Configuration

N non hanging

Step 4. Material

T. tackable fabric

Step 5. Height

42 42" high
46 46" high

Step 6. Width

36 36" wide
42 42" wide
48 48" wide
54 54" wide
60 60" wide
66 66" wide
72 72" wide
78 78" wide

Prices for Steps 1-6.

		36	42	48	54	60	66
GNSMNT.	**42**	$505	543	581	622	667	706
	46	$527	569	604	641	678	724

		72	78
GNSMNT.	**42**	$748	786
	46	$770	815

Step 7. Trim Finish

Metallic Paint

MS metallic silver +$0

Sand Texture Paint

BK black +$0

Smooth Paint		
91	white	+$0
98	studio white	+$0
G1	graphite	+$0

Step 8. Surface Finish

See application chart and textiles list for fabric usage and numbers. First 2 digits of number indicate fabric line; remaining digit(s) indicate fabric color.

	36	**42**	**48**	**54**	**60**
Price Category C	+$0	0	0	0	0
Price Category 1	+$0	0	0	0	0
Price Category 2	+$10	10	13	13	15
Price Category 3	+$24	24	31	31	35
Price Category 4	+$42	42	54	54	61
Price Category 5	+$70	70	91	91	103

	66	**72**	**78**
Price Category C	+$0	0	0
Price Category 1	+$0	0	0
Price Category 2	+$15	18	18
Price Category 3	+$35	44	44
Price Category 4	+$61	76	76
Price Category 5	+$103	127	127

Personal Side Screen, Delineation GNSPXT

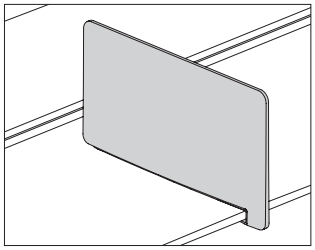

Product Information

Description

This tackable frameless fabric screen provides boundary between workers seated side-by-side, and attaches to the front edge of a squared-edge Layout Studio® surface. It has an edge profile that is complementary to both Pari and flat-edge screens.

Notes

Screen is 13″H × 22″D.

Mid-run (M) screen can be placed anywhere along the front edge of a back-to-back application, except directly above an end leg, or above an intermediate leg on a single-sided application. Screen can be moved by the user.

All fabric is railroaded.

Dimensions

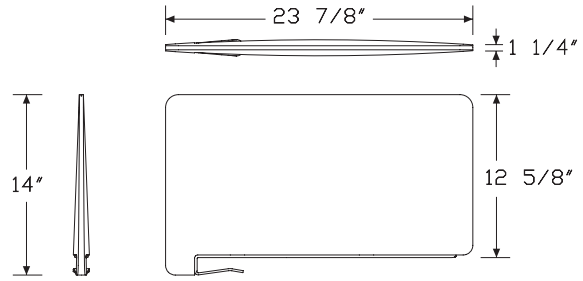

Delineation Mid Screen

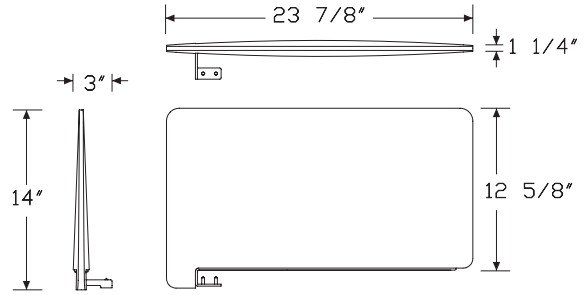

Delineation End Screen, Left

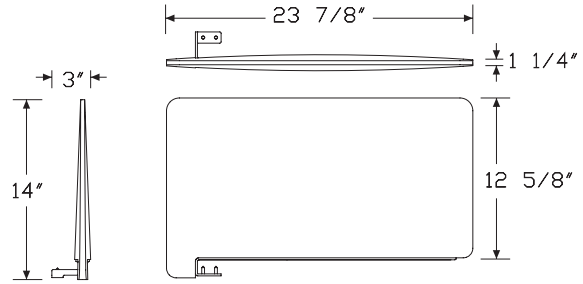

Delineation End Screen, Right

Personal Side Screen, Delineation

continued

Specification Information		
Step 1.		
GN A		
Step 2. Type		
SP	delineation A	
Step 3. Configuration		
XT.	frameless fabric A	
Step 4. Placement		
M	mid-run on back-to-back applications A	
Prices for Steps 1-4.		
GNSPXT. M		$356
Step 5. Bracket Finish		
Metallic Paint		
MS	metallic silver A	+$0
Sand Texture Paint		
91	white A	+$0
98	studio white A	+$0
BK	black A	+$0
G1	graphite A	+$0
Step 6. Surface Finish		
Price Category C		+$0
Price Category 1		+$0
Price Category 2		+$6
Price Category 3		+$10
Price Category 4		+$21

Framed Screen, Delineation GNSPNT

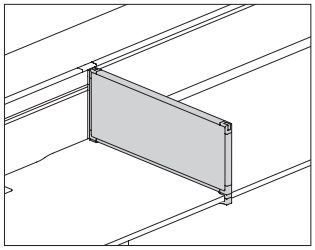

Product Information

Description

This fabric screen provides boundary between people seated side-by-side and attaches to the front edge of a squared-edge Layout Studio surface. It is tackable and has a painted metal frame.

Notes

Screen can be placed anywhere along front edge of a surface except on top of a desk end leg.

Screen width aligns with the depth of a work surface with flash gap.

Screen attaches to front edge of a work surface with a bracket. Order delineation screen attachment bracket (GNSC.) separately.

Order connector finishing kit (GNSE.) separately.

All fabric is railroaded.

Screen accepts Customer's Own Material (COM). Yardage is estimated for nondirectional 54"-wide fabrics.

Width—Yardage

24—0.84

30—1.00

36—1.19

For information on multiple quantities or directional fabrics, contact COM Department. See Order Information in Appendices.

Dimensions

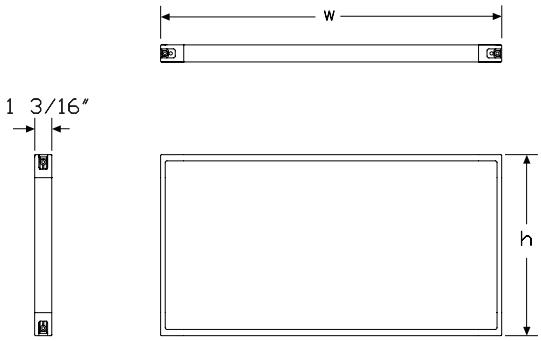

Specification Information

Step 1.

GN

Step 2. Type

SP delineation

Step 3. Configuration

N non hanging

Step 4. Material

T. tackable fabric

Step 5. Height

42 42" high

46 46" high

Step 6. Width

24 24" wide

30 30" wide

36 36" wide

Prices for Steps 1-6.

		24	30	36
GNSPNT.	**42**	$279	327	372
	46	$292	343	386

Step 7. Trim Finish

Metallic Paint

MS metallic silver +$0

Sand Texture Paint

BK black +$0

Smooth Paint

91 white +$0

98 studio white +$0

G1 graphite +$0

Step 8. Surface Finish	
See application chart and textiles list for fabric usage and numbers. First 2 digits of number indicate fabric line; remaining digit(s) indicate fabric color.	
Price Category C	+$0
Price Category 1	+$0
Price Category 2	+$8
Price Category 3	+$18
Price Category 4	+$32
Price Category 5	+$54

Screen Brackets

GNSA.
GNSB.
GNSC.

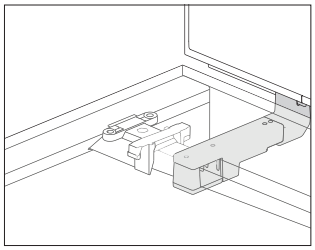

Product Information

Description

These brackets provide the attachment for the desk up, modesty, and delineation screens.

Notes

Specify 1 package for each screen.

Dimensions

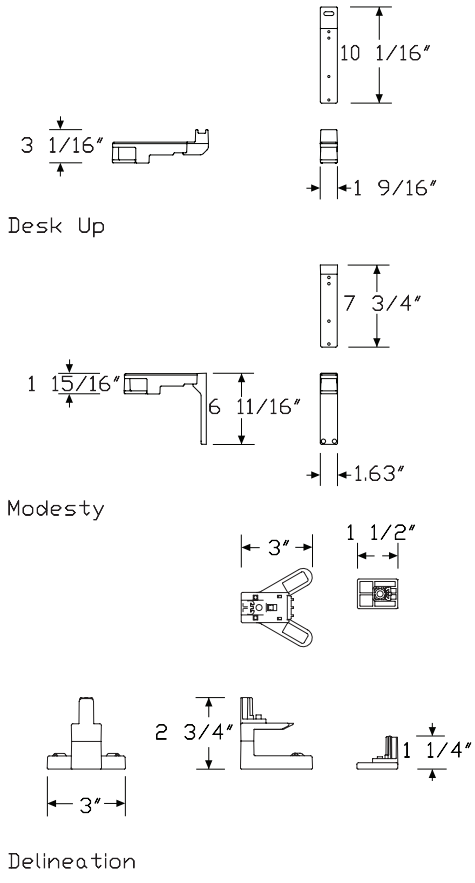

Specification Information

Step 1.

GNS

Step 2. Type

A.	desk up
B.	modesty
C.	delineation

Prices for Steps 1-2.

GNSA.	$109
GNSB.	$176
GNSC.	$50

Step 3. Finish

Metallic Paint

MS	metallic silver	+$0

Sand Texture Paint

BK	black	+$0

Smooth Paint

91	white	+$0
98	studio white	+$0
G1	graphite	+$0

Screen Connectors

GNSE.
GNSH.
GNSJ.

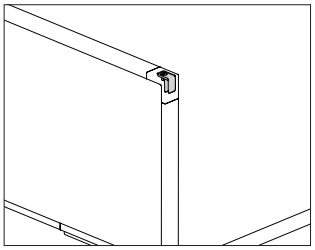

Product Information

Description

These connectors finish the exposed corners of a screen. Quantity of 2.

Notes

Specify the finishing kit (GNSE.) to finish the corner of a screen when not connecting to another screen or corner post.

Specify the in-line connector kit (GNSH.) where 2 screens meet.

Specify the post connector kit (GNSJ.) when connecting a screen to a corner post.

When using desk up screens, appropriate kits must be specified for the top of the screen only.

Modesty screens require kits for the top and bottom of the screen.

Dimensions

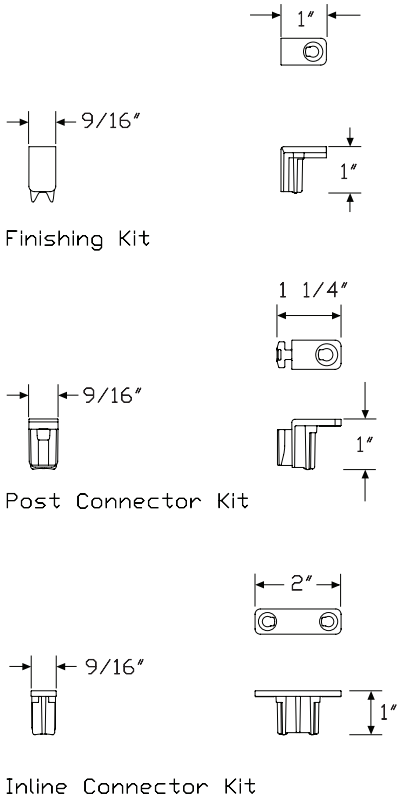

Specification Information

Step 1.

GN

Step 2. Type

SE.	finishing kit
SH.	inline connector kit
SJ.	post connector kit

Prices for Steps 1-2.

GNSE.	$16
GNSH.	$17
GNSJ.	$15

Step 3. Trim Finish

Metallic Paint

MS	metallic silver	+$0

Sand Texture Paint

BK	black	+$0

Smooth Paint

91	white	+$0
98	studio white	+$0
G1	graphite	+$0

Corner Post

GNSND.
GNSNM.

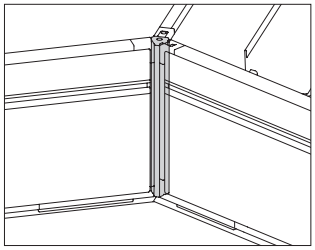

Product Information

Description

This corner post fills the open space created when screens come together at 120°.

Notes

Specify corner post to match height of attaching screens.

Dimensions

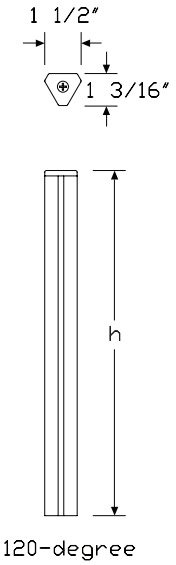

Specification Information

Step 1.

GN

Step 2. Type

SN	120°	

Step 3. Configuration

D.	desk up	
M.	modesty	

Step 4. Height

42	42″ high	
46	46″ high	

Prices for Steps 1-4.

GNSND.	**42**	$34
	46	$42
GNSNM.	**42**	$46
	46	$52

Step 5. Trim Finish

91	white	+$0
G1	graphite	+$0
MS	metallic silver	+$0

Frameless Glass Screen Filler Kit GNSX.

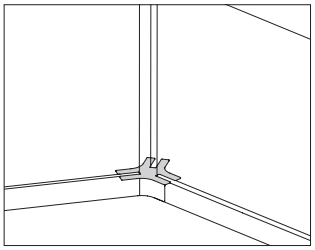

Product Information

Description

This trim piece fills the gap between 3 frameless glass screens in a 120° corner application.

Dimensions

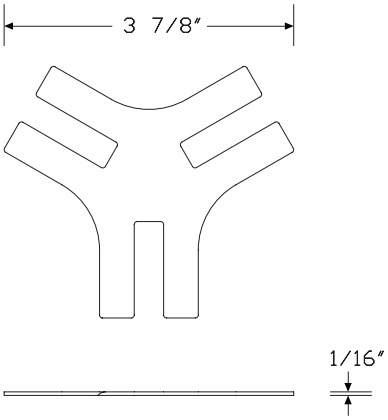

Specification Information

Step 1.

GN

Step 2. Type

SX.	frameless screen filler for 120-degree applications

Step 3. Application

A	1/4″ glass
B	3/8″ glass

Prices for Steps 1-3.

GNSX.	**A**	$13
	B	$13

Step 4. Trim Finish

Metallic Paint

MS	metallic silver	+$0

Sand Texture Paint

91	white	+$0
98	studio white	+$0
BK	black	+$0
G1	graphite	+$0

Gallery Panel, Leg-Attached GNSTA.

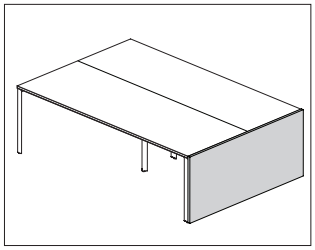

Product Information

Description

This gallery panel attaches to an Engage desk end leg. It has a laminate surface with thermoplastic edge, laminate surface with a thermoplastic backed plywood edge, or veneer surface and edge. Attachment hardware included.

Notes

Top of 29″-high panel aligns with top of a primary surface; top of 42″- and 46″-high panels align with top of a desk up or modesty screen.

All gallery panels are nonhanded. 24″- and 30″-wide panels will work on both right-hand and left-hand single desk end legs.

Grain/pattern direction is vertical for veneer, wood grain laminates, and directional laminates.

Wood grain and directional laminates are available only in 24″-60″ widths.

Dimensions

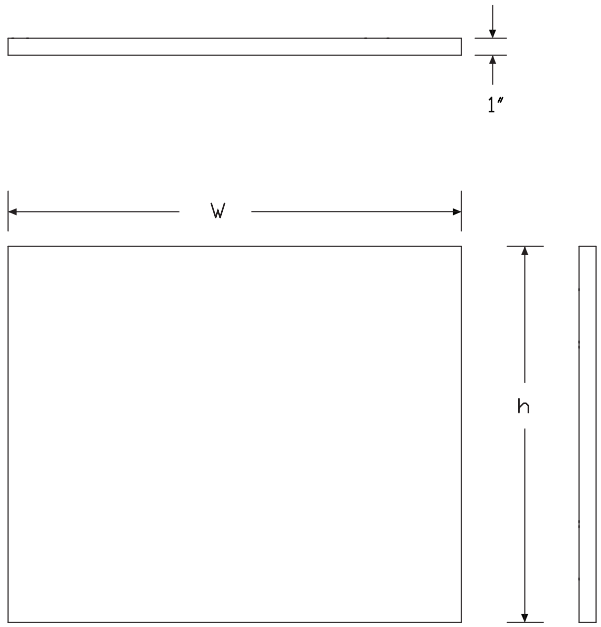

Specification Information

Step 1.

GN

Step 2. Type

ST gallery panel

Step 3. Configuration

A. leg-attached

Step 4. Height

29 29″ high
42 42″ high
46 46″ high

Step 5. Width

24 24″ wide
30 30″ wide
36 36″ wide
48 48″ wide
60 60″ wide
72 72″ wide

Step 6. Surface Material

L laminate top/thermoplastic edge
W veneer
U laminate top/universal edge

Prices for Steps 1-6.

			L	W	U
GNSTA.	**29**	**24**	$241	528	241
		30	$266	582	266
		36	$289	632	289
		48	$376	826	376
		60	$465	1022	465
		72	$555	1219	555
	42	**24**	$284	622	284
		30	$304	668	304
		36	$335	735	335
		48	$453	992	453
		60	$560	1229	560
		72	$669	1466	669

46	**24**	$292	638	292
	30	$314	691	314
	36	$359	787	359
	48	$472	1036	472
	60	$588	1290	588
	72	$700	1539	700

Step 7. Surface Finish

For 24" wide (24), 30" wide (30), 36" wide (36), 48" wide (48), or 60" wide (60) with laminate top/thermoplastic edge (L), or laminate top/universal edge (U)

38	twilight	+$0
39	desert	+$0
76	light brown walnut	+$0
91	white	+$0
98	studio white	+$0
8Q	folkstone grey	+$0
CL	cool grey neutral	+$0
HF	inner tone light	+$0
HM	natural maple	+$0
HP	light anigre	+$0
HT	inner tone	+$0
HX	aged cherry	+$0
HY	walnut on cherry	+$0
LA	light ash	+$0
LBA	clear on ash	+$0
LBR	phantom ecru	+$0
LBS	phantom cocoa	+$0
LBU	medium matte walnut	+$0
LBV	warm grey teak	+$0
LBB	oak on ash	+$0
LBC	walnut on ash	+$0
LBD	dark brown walnut	+$0
LBF	neutral twill	+$0
LBG	sarum twill	+$0
LBH	earthen twill	+$0
LBJ	graphite twill	+$0
LBM	crisp linen	+$0
LBN	classic linen	+$0
LBP	casual linen	+$0
LBQ	white twill	+$0
LU	soft white	+$0
WL	sandstone	+$0
WN	warm grey neutral	+$0

Wood Veneer

For veneer (W)

2U	light brown walnut	+$55
40	dark brown walnut	+$55
ET	clear on ash	+$55
EU	oak on ash	+$55
EV	walnut on ash	+$55

Solid-Color Laminate Top/Thermoplastic Edge

For 72" wide (72) with laminate top/thermoplastic edge (L), or laminate top/universal edge (U)

8Q	folkstone grey	+$0
91	white	+$0
98	studio white	+$0
MT	medium tone	+$0
WL	sandstone	+$0
WN	warm grey neutral	+$0

Step 8. Bracket Finish

Metallic Paint

MS	metallic silver	+$0

Sand Texture Paint

91	white	+$0
98	studio white	+$0
BK	black	+$0
G1	graphite	+$0

Step 9. Edge Finish

For 24" wide (24), 30" wide (30), 36" wide (36), 48" wide (48), 60" wide (60), or 72" wide (72) with laminate top/thermoplastic edge (L)

76	light brown walnut	+$0
8Q	folkstone grey	+$0
91	white	+$0
98	studio white	+$0
CL	cool grey neutral	+$0
HF	inner tone light	+$0
HM	natural maple	+$0
HP	light anigre	+$0
HT	inner tone	+$0
HX	aged cherry	+$0
HY	walnut on cherry	+$0
LA	light ash	+$0
LBA	clear on ash	+$0
LBR	phantom ecru	+$0
LBS	phantom cocoa	+$0
LBU	medium matte walnut	+$0
LBV	warm grey teak	+$0
LBB	oak on ash	+$0
LBC	walnut on ash	+$0
LBD	dark brown walnut	+$0
LBF	neutral twill	+$0
LBG	sarum twill	+$0
LBH	earthen twill	+$0
LBJ	graphite twill	+$0
LBK	pewter mesh	+$0
LBL	steel mesh	+$0
LBM	crisp linen	+$0
LBN	classic linen	+$0
LBP	casual linen	+$0
LBQ	white twill	+$0
LU	soft white	+$0
WL	sandstone	+$0
WN	warm grey neutral	+$0

For laminate top/universal edge (U)

PLY	plywood edge A	+$50

Pari Screen, End of Run GNSFXT

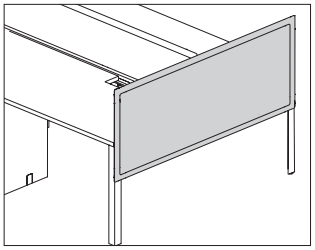

Product Information

Description

This tackable frameless fabric screen attaches to the outside of a Layout Studio® double end leg and provides boundary above and slightly below a surface at the end of a bench or table. Attachment hardware included.

Notes

Screens attach to Layout Studio infrastructure with included hardware; no additional attaching hardware is required.

Screen width must match the depth of leg next to which it will be placed.

All fabric is railroaded.

Screen accepts Customer's Own Material (COM). Yardage is estimated for nondirectional 54"-wide fabrics.

Width—Yardage

48—1.75

60—2.10

For information on multiple quantities or directional fabrics, contact COM Department. See Order Information in Appendices.

Dimensions

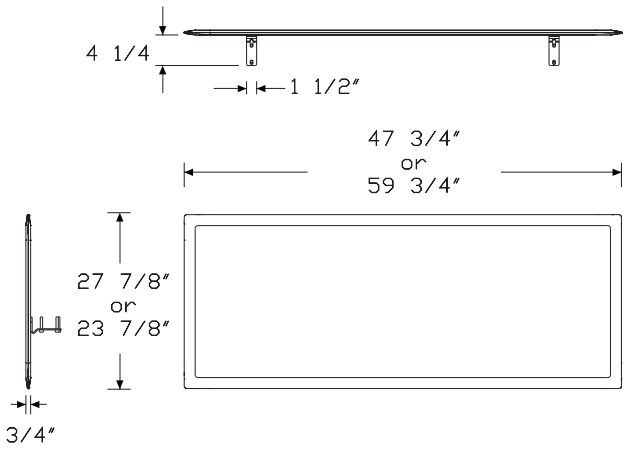

Specification Information

Step 1.

GNSFXT. A

Step 2. Height

42	42" high A
46	46" high A

Step 3. Width

48	48" wide A
60	60" wide A

Prices for Steps 1-3.

		48	**60**
GNSFXT.	**42**	$650	724
	46	$714	797

Step 4. Bracket Finish

Metallic Paint

MS	metallic silver A	+$0

Sand Texture Paint

91	white A	+$0
98	studio white A	+$0
BK	black A	+$0
G1	graphite A	+$0

Step 5. Surface Finish

Price Category C	+$86
Price Category 1	+$0
Price Category 2	+$15
Price Category 3	+$34
Price Category 4	+$58
Price Category E	+$131

Pari Screen, Delineation GNSPXP

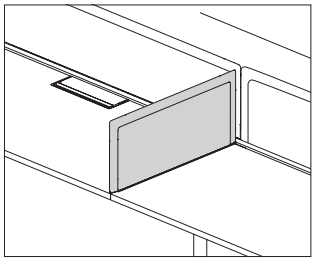

Product Information

Description

This tackable fabric screen provides boundary between workers seated side-by-side, and attaches to a squared-edge Layout Studio® surface.

Notes

All fabric is railroaded.

For screen attachment in middle of run, use either left-hand bracket (GNSD.PNxxEL) or right-hand bracket (GNSD.PNxxER), ordered separately.

Screen accepts Customer's Own Material (COM). Yardage is estimated for nondirectional 54"-wide fabrics.

Width—Yardage

24—0.92

30—1.10

For information on multiple quantities or directional fabrics, contact COM Department. See Order Information in Appendices.

Dimensions

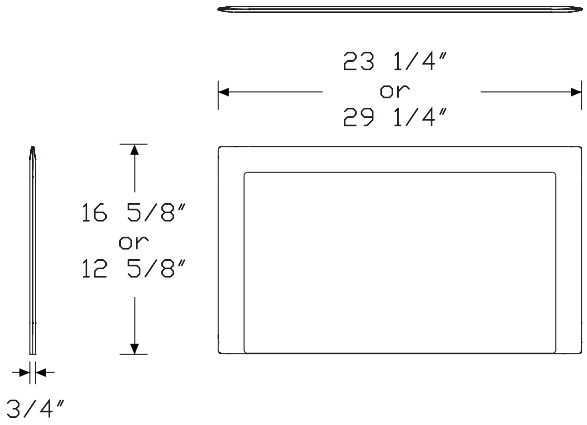

Specification Information

Step 1.

GNSPXP. A

Step 2. Height

42 42" high A

46 46" high A

Step 3. Width

24 24" wide A

30 30" wide A

Step 4. Location

EL end-of-run, left-hand A

ER end-of-run, right-hand A

Prices for Steps 1-4.

		EL	ER
GNSPXP. 42	**24**	$487	487
	30	$503	503
46	**24**	$513	513
	30	$532	532

Step 5. Bracket Finish

MS	metallic silver A	+$0

Step 6. Surface Finish

Price Category C	+$48
Price Category 1	+$0
Price Category 2	+$8
Price Category 3	+$19
Price Category 4	+$32
Price Category E	+$0

Flat Edge Screen, Delineation GNSPXS

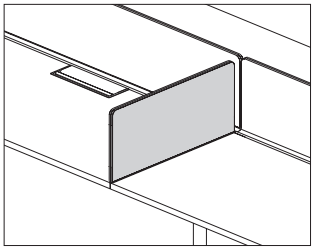

Product Information

Description

This tackable fabric screen provides boundary between workers seated side-by-side, and attaches to a squared-edge Layout Studio® surface.

Notes

All fabric is railroaded.

For screen attachment in middle of run, use either left-hand bracket (GNSD.SNxxEL) or right-hand bracket (GNSD.SNxxER), ordered separately.

Screen accepts Customer's Own Material (COM). Yardage is estimated for nondirectional 54"-wide fabrics.

Width—Yardage

24—0.92

30—1.10

For information on multiple quantities or directional fabrics, contact COM Department. See Order Information in Appendices.

Dimensions

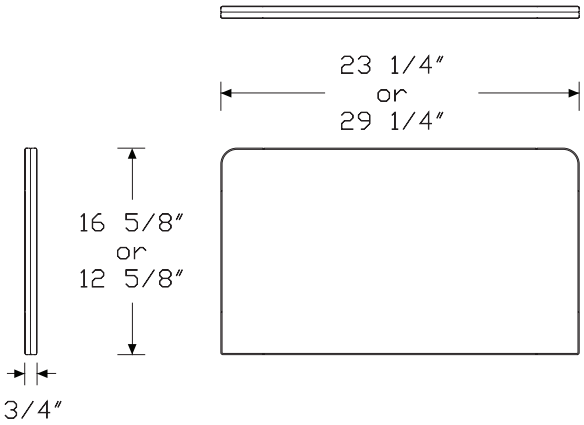

Specification Information

Step 1.

GNSPXS. A

Step 2. Height

42 42" high A

46 46" high A

Step 3. Width

24 24" wide A

30 30" wide A

Step 4. Location

EL end-of-run, left-hand A

ER end-of-run, right-hand A

Prices for Steps 1-4.

		EL	ER
GNSPXS. 42	**24**	$312	312
	30	$338	338
46	**24**	$338	338
	30	$368	368

Step 5. Bracket Finish

MS	metallic silver A	+$0

Step 6. Surface Finish

Price Category 1	+$0
Price Category 2	+$6
Price Category 3	+$10
Price Category 4	+$21
Price Category E	+$0

Generic Beam Clamp GNSG.

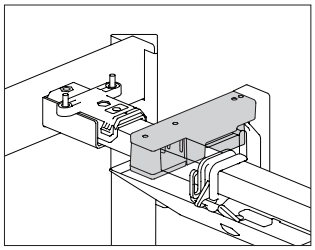

Product Information

Description

These beam clamps are used to attach a single-sided cable management tray.

Notes

If screens are being used, generic beam clamps are not required.

Specified as a single clamp. Order 2 for each cable management tray.

Dimensions

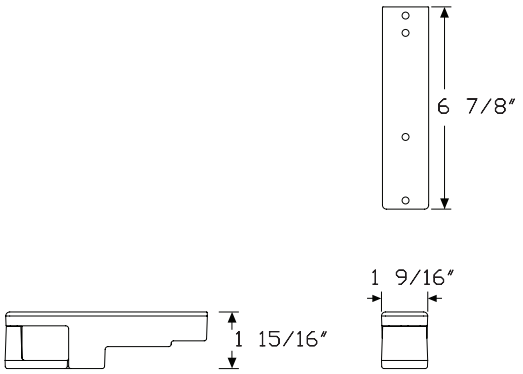

Specification Information

Step 1.

GNSG.	$36

Suspended End Cubby Hardware Kit LSH.

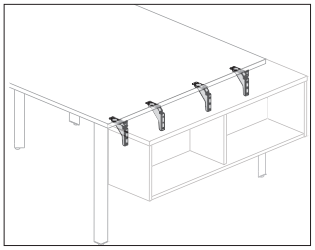

Product Information

Description

This hardware kit attaches a suspended end cubby to the outside of a Layout Studio® double desk end leg.

Notes

Order suspended end cubby (L2ES.B) separately.

Dimensions

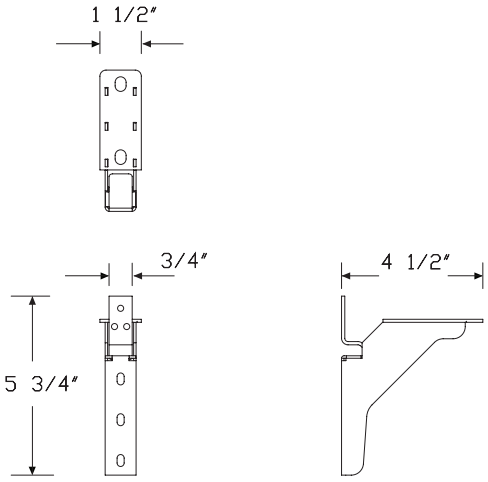

Specification Information

Step 1.

LSH. A

Step 2. Application

B	suspended below surface A	

Prices for Steps 1-2.

LSH.	**B**	$371

Step 3. Finish

Metallic Paint

MS	metallic silver A	+$0

Sand Texture Paint

91	white A	+$0
BK	black A	+$0
G1	graphite A	+$0

Smooth Paint

98	studio white A	+$0

Storage Attachment Kit, End Leg L2SL.

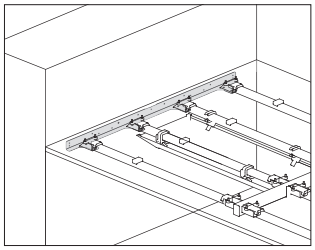

Product Information

Description

This hardware kit attaches Layout Studio® beams to a Tu® Wood end-of-run storage unit to allow the storage unit to replace a Layout Studio double end leg. The kit is available for use with a 48"-wide or a 60"-wide freestanding storage case. Finish is cool grey neutral.

Notes

To replace a Layout Studio double leg with a storage unit, order a Tu Wood end-of-run cabinet (L2ER.) separately.

Specify storage base option to match base option on storage unit.

Dimensions

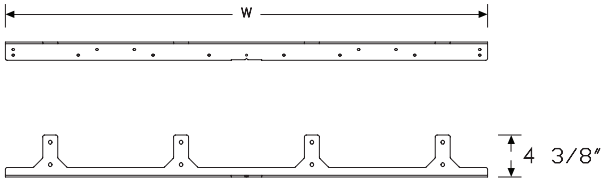

Specification Information

Step 1.

L2SL. A

Step 2. Depth

48	48" double end leg A	
60	60" double end leg A	

Prices for Steps 1-2.

L2SL.	**48**	$347
	60	$374

Step 3. Storage Base Option

1	base A	+$0
3	base with fronts to floor A	+$0
5	foot A	+$0
9	c-foot A	+$0

Index by Product Name

Layout Studio®	
Access Door	page(s) 109, 29
Beams, 120°	108
Beams, Meeting End	107, 24
Beams, Rectangular Primary	104, 23
Beams, Rectangular Return	105
Block Connector, 4-Circuit	113, 33
Cable Management Clips, Double Tray	122, 43
Closed Leg, Desk End, Double	98, 17
Closed Leg, Desk End, Single	95
Closed Leg, Desk End, Single, Performance Rail	14
Closed Leg, Standing End, Double	101, 20
Corner Post	169
Data Module	121, 42
Duplex Receptacle, 4-Circuit	116, 36
End Cap, Performance Rail	26
End Cap, Performance Rail, Package	27
Engage Leg, Asymmetrical Desk End, Double	88, 8
Engage Leg, Back-to-Back Bracing Leg	91
Engage Leg, Back-to-Back Bracing Leg, Performance Rail	10
Engage Leg, Corner Leg	90
Engage Leg, Desk End, Double	86, 6
Engage Leg, Desk End, Double, Meeting End	89, 9
Engage Leg, Desk End, Single	85
Engage Leg, Desk End, Single, Performance Rail	5
Engage Leg, Intermediate Desk	87
Engage Leg, Intermediate Desk, Performance Rail	7
Engage Leg, Intermediate Standing	93, 12
Engage Leg, Standing Back-to-Back Bracing Leg	94, 13
Engage Leg, Standing End, Double	92, 11
Flat Edge Screen, Delineation	176
Flat Edge Screen, Delineation, Performance Rail	69
Flat Edge Screen, Desk Up	145
Flat Edge Screen, Desk Up, Performance Rail	55
Flat Edge Screen, End of Run	67
Flat Edge Screen, Modesty	156
Floor Power Entry Cover	123, 44
Framed Screen, Delineation	165
Framed Screen, Desk Up	150
Framed Screen, Modesty	161
Frameless Glass Screen Filler Kit	170
Gallery Panel, Leg-Attached	171, 63
Generic Beam Clamp	177
Glass Screen, Desk Up, Frameless	152
Glass Screen, Desk Up, Frameless, Performance Rail	56
Hardware Pack, Fixed Surfaces	140, 51
Hardware Pack, Quick Release Attachment	141, 52
Hardware Pack - Sliding - Rectangular Primary	142, 53
Harness Cover	115, 35
Individual Cubby	72
Junction Block, 4-Circuit	111, 31
Junction Block Attachment Bracket	110
Junction Block Attachment Bracket, Performance Rail	30
Junction Block-to-Junction Block Jumper	114, 34
Layout Studio® Laminate Screen, Desk Up	147
Layout Studio® Laminate Screen, Desk Up, Performance Rail	58
Layout Studio® Laminate Screen, Modesty	158
Meeting End, Rectangular	135, 49
Pari Screen, Delineation	175
Pari Screen, Delineation, Performance Rail	68
Pari Screen, Desk Up	143
Pari Screen, Desk Up, Performance Rail	54
Pari Screen, End of Run	174, 66
Pari Screen, Modesty	154
Performance Rail	25
Personal Side Screen, Delineation	163, 61
Power Entry, 4-Circuit	117, 37
Power Entry, 4-Circuit, New York City	118, 38
Primary Work Surface, 120°	137
Primary Work Surface, Rectangular	125
Primary Worksurface, Rectangular, Performance Rail	46
Project Table, Rectangular	132
Return Leg Beam Replacement Kit	106
Return Work Surface, Rectangular	130
Screen Bracket, Delineation, Pari or Flat Edge	70
Screen Brackets	167
Screen Connectors	168
Screen - Modesty - Metal, Performance Rail-Attached	60
Shared Cubby	74
Shared Cubby Insert	84
Stanchion Kit, Performance Rail	80
Storage Attachment Kit, End Leg	179, 83
Suspended End Cubby	77
Suspended End Cubby Hardware Kit	178, 82
Trim Strip, Performance Rail Center Channel	28
Umbilical Riser, Fixed Height	124, 45
Wire Management Tray	119, 40
Wire Management Tray, Single, Performance Rail	39

Index by Product Number

GN1351 Power Entry, 4-Circuit page(s) 117, 37
GN1352 Power Entry, 4-Circuit, New York City 118, 38
GN1353 Junction Block-to-Junction Block Jumper 114, 34
GN1354 Block Connector, 4-Circuit 113, 33
GN1355 Duplex Receptacle, 4-Circuit 116, 36
GN1358 Junction Block, 4-Circuit 111, 31
GNBA. Beams, Rectangular Return 105
GNBB.
GNBD. Return Leg Beam Replacement Kit 106
GNBF. Beams, 120° 108
GNBG.
GNBM. Beams, Meeting End 107, 24
GNBR. Beams, Rectangular Primary 104, 23
GNCFEL Closed Leg, Desk End, Single 95
GNCFEL Closed Leg, Desk End, Single, Performance Rail 14
GNCFEN Closed Leg, Desk End, Double 98, 17
GNCFER Closed Leg, Desk End, Single 95
GNCFER Closed Leg, Desk End, Single, Performance Rail 14
GNCSEN Closed Leg, Standing End, Double 101, 20
GNHDA. Hardware Pack, Quick Release Attachment 141, 52
GNHDF. Hardware Pack, Fixed Surfaces 140, 51
GNHPA. Hardware Pack, Quick Release Attachment 141, 52
GNHPF. Hardware Pack, Fixed Surfaces 140, 51
GNHRS. Hardware Pack - Sliding - Rectangular Primary 142, 53
GNHSF. Hardware Pack, Fixed Surfaces 140, 51
GNLFAL Engage Leg, Asymmetrical Desk End, Double 88, 8
GNLFAR
GNLFBN Engage Leg, Back-to-Back Bracing Leg 91
GNLFBN Engage Leg, Back-to-Back Bracing Leg, Performance Rail 10
GNLFCN Engage Leg, Corner Leg 90
GNLFEL Engage Leg, Desk End, Single 85
GNLFEL Engage Leg, Desk End, Single, Performance Rail 5
GNLFEN Engage Leg, Desk End, Double 86, 6
GNLFER Engage Leg, Desk End, Single 85
GNLFER Engage Leg, Desk End, Single, Performance Rail 5
GNLFPN Engage Leg, Desk End, Double, Meeting End 89, 9
GNLFSN Engage Leg, Intermediate Desk 87
GNLFSN Engage Leg, Intermediate Desk, Performance Rail 7
GNLSBN Engage Leg, Standing Back-to-Back Bracing Leg 94, 13
GNLSEN Engage Leg, Standing End, Double 92, 11
GNLSSN Engage Leg, Intermediate Standing 93, 12
GNMRF. Screen - Modesty - Metal, Performance Rail-Attached 60
GNPA. Junction Block Attachment Bracket 110
GNPA. Junction Block Attachment Bracket, Performance Rail 30
GNPC. Floor Power Entry Cover 123, 44
GNPD. Access Door 109, 29
GNPH. Harness Cover 115, 35
GNRC. End Cap, Performance Rail 26
GNRC. End Cap, Performance Rail, Package 27
GNRD. Performance Rail 25
GNRS.
GNRT. Trim Strip, Performance Rail Center Channel 28
GNSA. Screen Brackets 167
GNSB.
GNSC.
GNSDFT Framed Screen, Desk Up 150
GNSDL. Layout Studio® Laminate Screen, Desk Up 147
GNSDNT Framed Screen, Desk Up 150
GNSDRG Glass Screen, Desk Up, Frameless, Performance Rail 56
GNSDRL Layout Studio® Laminate Screen, Desk Up, Performance Rail 58
GNSDRS Flat Edge Screen, Desk Up, Performance Rail 55
GNSDRT Pari Screen, Desk Up, Performance Rail 54
GNSDRU Layout Studio® Laminate Screen, Desk Up, Performance Rail 58
GNSD. Screen Bracket, Delineation, Pari or Flat Edge 70
GNSDTT Framed Screen, Desk Up 150
GNSDU. Layout Studio® Laminate Screen, Desk Up 147
GNSDXG Glass Screen, Desk Up, Frameless 152
GNSDXS Flat Edge Screen, Desk Up 145
GNSDXT Pari Screen, Desk Up 143
GNSE. Screen Connectors 168
GNSFXS Flat Edge Screen, End of Run 67
GNSFXT Pari Screen, End of Run 174, 66
GNSG. Generic Beam Clamp 177
GNSH. Screen Connectors 168
GNSJ.
GNSML. Layout Studio® Laminate Screen, Modesty 158
GNSMNT Framed Screen, Modesty 161
GNSMU. Layout Studio® Laminate Screen, Modesty 158
GNSMXS Flat Edge Screen, Modesty 156
GNSMXT Pari Screen, Modesty 154
GNSND. Corner Post 169
GNSNM.
GNSPNT Framed Screen, Delineation 165
GNSPXP Pari Screen, Delineation 175
GNSPXP Pari Screen, Delineation, Performance Rail 68
GNSPXS Flat Edge Screen, Delineation 176
GNSPXS Flat Edge Screen, Delineation, Performance Rail 69
GNSPXT Personal Side Screen, Delineation 163, 61
GNSTA. Gallery Panel, Leg-Attached 171, 63
GNSX. Frameless Glass Screen Filler Kit 170
GNTAD. Primary Work Surface, 120° 137
GNTAF.

GNTAG.		
GNTAN.		
GNTDG.	Meeting End, Rectangular	135, 49
GNTDN.		
GNTPA.	Project Table, Rectangular	132
GNTPN.		
GNTRD.	Primary Work Surface, Rectangular	125
GNTRF.		
GNTRG.		
GNTRN.		
GNTRR.	Primary Worksurface, Rectangular, Performance Rail	46
GNTSN.	Return Work Surface, Rectangular	130
GNWC.	Cable Management Clips, Double Tray	122, 43
GNWD.	Wire Management Tray	119, 40
GNWF.	Umbilical Riser, Fixed Height	124, 45
GNWG.		
GNWM.	Data Module	121, 42
GNWS.	Wire Management Tray	119, 40
GNWS.	Wire Management Tray, Single, Performance Rail	39
L2EC.	Individual Cubby	72
L2ES.	Suspended End Cubby	77
L2EY.	Shared Cubby	74
L2SL.	Storage Attachment Kit, End Leg	179, 83
L2SS.	Stanchion Kit, Performance Rail	80
LLCM.	Shared Cubby Insert	84
LSH.	Suspended End Cubby Hardware Kit	178, 82

20-Day or Less/Assigned Lead-Time Order Information

20-Day or Less and Assigned Lead-Time Programs

20-day or less and assigned lead-time products are designed for established Herman Miller dealers with pre-approved credit.

Products are distributed from multiple manufacturing facilities across the United States. All products and options not designated by an Assigned Lead-Time icon [A] will ship in 20 business days or less after being acknowledged by Herman Miller. Products and options designated by an [A] are on the assigned lead-time program and will ship in 20 days, less than 20 days, or more than 20 days from order acknowledgement.

Ordering Procedure

Please place orders through Order Manager. If this is not available to you, place orders through mail or fax. Verbal purchase orders will not be accepted.

Order Entry fax number for Passage®, 5000 Series, and Meridian® Filing and Storage: (616) 846 9236.

Order Entry fax number for all other products: (616) 654 3085.

For more information, contact your Customer Care representative at: (866) 854 3048 EXT 3400.

Shipments and Delivery

Per Herman Miller Terms and Conditions.

Changes and Cancellation

Per Herman Miller Terms and Conditions.

Stain-to-Match Program

Program Overview

The Stain-to-Match program gives you the option of using veneer finishes that are not listed in the standard offering. The program allows Herman Miller to match a customer's existing recut or natural veneer, or create a new finish that is unique to an installation.

Specific information on approval, ordering, pricing, and warranty for the Stain-to-Match program is listed below. Questions and requests for assistance may be directed to Herman Miller Options at:

(800) 654 3910

Stain-to-Match Process

1. Fill out the Options Stain-to-Match Request Form and send along with a color sample (2" x 3" minimum) to the Herman Miller Options Applications Team at the address provided on the form. The form can be found on Omni.
2. Within 7-10 working days, Herman Miller Options will send a sample of the color-matched stain on Herman Miller veneer to the requester for the customer's signed approval.
3. If the sample meets the customer 's approval, sign the reverse side of the sample, scan and email the approval to:
   options@hermanmiller.com.
4. After the stain has been approved, a formal quotation with special number and pricing can be provided, or the product can be specified through the Vary Easy program, if available. Work with the Options team on final product needs and how to specify.
5. A purchase order can then be placed.

Stain-to-Match Warranty

Herman Miller warrants its products to be free from defects in craftsmanship from the date of delivery for the applicable warranty period. Herman Miller is responsible for the physical properties of the veneers available through the Stain-to-Match program, which include:

STA: Stain-to-Match on Recut Ash
STB: Stain-to-Match on Beech
STC: Stain-to-Match on Cherry
STD: Stain-to-Match on Oak
STK: Stain-to-Match on Reltech Anigre (Geiger)
STM: Stain-to-Match on Recut Mahogany
STP: Stain-to-Match on Maple
STU: Stain-to-Match on Walnut (Geiger)

See your specification tool for product specific finish offering limitations.

Customer's Own Material Order Information — Workspaces

Customer's Own Material

Program Overview

The Customer's Own Material (COM) program gives you the option of using textiles other than those listed. Herman Miller will test textiles for application to Herman Miller products and will process orders for those with approved COM textiles only. COM textiles are on assigned lead times.

Omni lists an overview of fabrics that have been tested and indicates whether or not they were approved for application to Herman Miller products.

Specific information on the terms and conditions, testing, approval, and ordering process for COM is listed below. Questions about the COM program and requests for assistance may be directed to your COM representative at:
(616) 654 3400
(866) 854 3048 EXT 6543400

Customer's Own Material Warranty

Herman Miller does not warrant COM textiles. COM textiles are tested for application only; they are not tested for performance. The Herman Miller warranty does apply to the underlying products.

Suppliers of COM textiles are responsible for color consistency within commercial tolerances, UV stability, and resistance to soiling and perspiration.

Customer's Own Material Pricing

COM is a Category 1 fabric. There are no application charges for COM fabrics.

Ordering and payment for COM textile yardage are the responsibility of the customer and the textile supplier.

If desired, Herman Miller will purchase COM textiles directly from Maharam, Camira, C.F. Stinson, Guilford of Maine, Luna Textiles, Momentum Textiles and Ultrafabrics to simplify ordering and shipment. For this service, refer to the Supplier Connection program in Omni.

Application Note

Herman Miller does not guarantee that Customer's Own Material (COM) fabric patterns will align across panels/tiles or from one screen to the next. We also do not guarantee that COM fabric designs will be positioned consistently in the same location across several panels, tiles, or screens.

Textile Approval

1. Select a COM textile and a Herman Miller product.
2. If your textile does not show as tested in Omni, submit a request. You will be required to select a specific color of the textile and feature of the product to test, i.e., seat, back, etc.
3. Herman Miller will notify you of approval or disapproval within 4 days from receipt of the test yardage.

Ordering Products with COM

1. Refer to the specific products to determine the yardage required for COM textiles.
   Note: Yardage requirements are based on nondirectional, 54"-wide textiles. 66"-wide textiles are needed for application on 60"-wide products. Additional yardage may be needed due to the unique characteristics of a textile.
2. Obtain the COM ID# in Omni. If the color you are ordering does not have a COM ID# assigned, click "Create ID".
3. Enter your order on Order Manager in Omni.
4. Upon receipt of your purchase order, Herman Miller will send you a PO acknowledgment.
5. Arrangements must be made for the textiles to be shipped from the supplier to Herman Miller for application to the Herman Miller products. Textiles must be tagged with the assigned identification number and the roll yardage quantity. See Omni for shipping procedures and current shipping addresses or contact a COM representative at (616) 654 3400 or (866) 854 3048 EXT 6543400.

   Products will be scheduled for production when COM textiles are received at Herman Miller. Standard lead times in effect at that time will apply.

   Note: If textiles are to be purchased directly by Herman Miller through the Supplier Connection program, Herman Miller will handle the ordering and shipping process and will schedule your order for production upon receipt of your purchase order (dependent on textile availability). Refer to the Supplier Connection program for more information.

Supplier Connection

Program Overview

The Supplier Connection program is a service offered by Herman Miller to purchase approved COM textiles directly from Maharam, Camira, C.F. Stinson, Guilford of Maine, Luna Textiles, Momentum Textiles and Ultrafabrics. When you select a textile through this program, Herman Miller will facilitate the ordering, scheduling, and shipment of the textile directly with the supplier.

Suppliers included in the Supplier Connection program keep an active inventory of textiles that are pre-approved for application to Herman Miller products. Pre-approval applies only to the suitability of a textile for manufacturing and application to a Herman Miller product. Omni provides an overview of fabrics that have been tested and indicates whether or not they were approved for application to Herman Miller products.

Specific information on the terms and conditions, testing, approval, and ordering process for the Supplier Connection program is listed below. Questions and requests for assistance may be directed to your COM representative at:
(616) 654 3400
(866) 854 3048 EXT 6543400

Supplier Connection Warranty

Textiles purchased by Herman Miller through the Supplier Connection program are COM and are not warranted by Herman Miller. COM textiles are tested for application only; they are not tested for performance. The Herman Miller warranty does apply to the underlying products.

Suppliers of COM textiles are responsible for color consistency within commercial tolerances, UV stability, and resistance to soiling and perspiration.

Supplier Connection Pricing

Textiles purchased by Herman Miller through the Supplier Connection program are COM. COM is a Category 1 fabric. There are no application charges for COM fabrics.

Payment for textiles purchased by Herman Miller through the Supplier Connection program is the responsibility of the customer or dealer. Herman Miller will invoice the order at a total product cost based on the supplier's price published at the time of the order.

Textile Approval

1. Select a COM textile and a Herman Miller product.
2. If your textile does not show as tested in Omni, submit a request. You will be required to select a specific color of the textile and feature of the product to test, i.e., seat, back, etc.
3. Herman Miller will notify you of approval or disapproval within 4 days from receipt of the test yardage.

Ordering Products with Supplier Connection COM

1. Identify and include the following information on your purchase order:
   - Product number and option
   - Herman Miller's COM identification number
2. Enter your order on Order Manager in Omni.
3. Upon receipt of the purchase order, Herman Miller will process your order and send you a PO acknowledgment. Herman Miller will determine the yardage required to produce your product and will order and schedule for delivery the required textile. Standard lead times in effect at the time the textile is allocated at the supplier will apply to products ordered through this program.

Proprietary Textiles Application Chart — Workspaces

• *Available*

A *Assigned lead-time textile.*

See page 2 for exception notes.

	Action Office® Panels/Connectors	Action Office/Ethospace® B-Style Storage	Action Office B-Style Tackboards	Action Office/Ethospace E-Style Storage	Ethospace Tiles/Connectors	Ethospace/Canvas Office Landscape® Privacy Doors	Canvas Tiles/Extended Width Tiles/Channel Tiles	Canvas B-/E-Style Storage	Canvas Standing Screen and Team Wall Infill	Canvas Tackboards	Canvas Metal Desk Hutch Back Panel	Canvas Vista™ Movable Insert and Display Unit	Layout Studio® Framed Screen	Overlay™ Performance Wall Cladding	Pari™ Screens/Flat Edge Screens/Channel Screens	Prospect™ Exterior Acoustic Pad	Public Office Landscape® Screen/Desk Top Divider	Renew™ Link Screens	Exclave® Tackable Boards and Stowage Tackable Backdrop	Exclave Video-Friendly Tackable Boards and Stowage Tackable Backdrop	Personal Side Screen	Tu® Wood Storage Cubby Tackboard	Seating
Price Category 1																							
COM Customer's Own Material A	1	1	1	1	1	1	1	1	1	1	1		1		1		1	1			1		1
2V_ _ Chain	•	•	•	•	•	•	22	•	•	•	•	•	•	•	•		•	•				•	
8T_ _ Crossing (85_ _)	2	2	2	•	•	•	•	2	•	•	•		•	•	•	•	•	•	•	8		•	18
3DE_ _ Dex	6	2	2	•	•	•	•	2	•	•	•		•	•	•		•	•	•		•	•	•
95_ _ Gem	2	2	2	•	•	•	•	2	•	•	•		•	•							•	•	•
2I_ _ Grasscloth	•	•	•	•	•	•	•	•	•	•	•	•		•	•	•	•	•			•	•	
1MN_ _ Monologue	2	2	2	•	•	•	•	2	•	•	•	•	•	•	•		•	•			•	•	•
5T_ _ Resonance	•	•	•	•	•	•	•	•	•	•	•	•	•	•							•	•	
2M_ _ Silkworm	•	•	•	•	•	•	•	•	•	•	•	•	•	•							•	•	
22F_ _ Slant	6		•		•	•	•		•	•	•	•	•	•								•	
235_ _ Tailored A	•	•		•	•	•	8	•	•	•	•	•		•								•	•
1WS_ _ Whisper	2	2	2	•	•	•	•	2	•	•	•	•	•	•	•	•	•	•	•		•		•
Price Category 2																							
3AR_ _ Aristo	2	2	2	•	•	•	•	2	•	•	•		•	•	•		•	•	•		•	•	•
1CD_ _ Code	•	•	•	•	•	•	•	•	•	•	•	•	•	•					•				
51_ _ Cord	•	•	•	•	•	•	•	•	•	•	•	•	•	•								•	
92_ _ Crepe	2	•	•	•	•	•	•	•	•	•	•	•	•	•		•			•	8	•		•
3EP_ _ Epic	2	2	2	•	•	•	•	2	•	•	•		•	•	•		•	•	•			•	•
22Q_ _ Fish Net		2	2	•	•	•	•	2	•		•	•	•	•	•	•	•	•					•
57_ _ Frost	•	•	•	•	•	•	•	•	•	•	•	•	•	•	•		•	•			•	•	
84_ _ Grosgrain	4	•	•	•	•	•	8	•	•		•	•	•	•							19	•	
4N_ _ Horizon	2	2	2	•	•	•	•	•	•	•	•	•	•	•							•	•	
1LM_ _ Loom	2	2	2	•		•	•	•		•	•		•	•	•		•	•	•				•
1HA_ _ Medley	2	2	2	•	•	•	•	•	•	•	•	•	•	•	•	•	•	•	•	8	•		•
3RA_ _ Rain	•	•	•	•	•	•	•	•	•	•	•	•	•	•	•		•	•	•		•	•	
1RV_ _ Rivet	2	2	2	•	•	•	•	2	•	•	•	•		•	•	•	•	•			•	•	•
3SL_ _ Sequel		2		2				2															•
3TW_ _ Twine	•	•	•	•	21	•	•	•	•	•	•	•	•	•	•		•	•	•		•	•	
8R_ _ Twist (5S_ _)	5	2	2	•	•	•	•	2	•	•	•	•	•	•	•	•	•	•			•	•	18
22T_ _ Well Suited		2		•	•		•	2	•		•	•		•									•

continued on next page

Proprietary Textiles Application Chart — Workspaces

continued

	Action Office® Panels/Connectors	Action Office/Ethospace® B-Style Storage	Action Office B-Style Tackboards	Action Office/Ethospace E-Style Storage	Ethospace Tiles/Connectors	Ethospace/Canvas Office Landscape® Privacy Doors	Canvas Tiles/Extended Width Tiles/Channel Tiles	Canvas B-/E-Style Storage	Canvas Standing Screen and Team Wall Infill	Canvas Tackboards	Canvas Metal Desk Hutch Back Panel	Canvas Vista™ Movable Insert and Display Unit	Layout Studio® Framed Screen	Overlay™ Performance Wall Cladding	Pari™ Screens/Flat Edge Screens/Channel Screens	Prospect™ Exterior Acoustic Pad	Public Office Landscape® Screen/Desk Top Divider	Renew™ Link Screens	Exclave® Tackable Boards and Stowage Tackable Backdrop	Exclave Video-Friendly Tackable Boards and Stowage Tackable Backdrop	Personal Side Screen	Tu® Wood Storge Cubby Tackboard	Seating
Price Category 3																							
70_ _ Bento	2	2	2	•			•	2	•	•	•	•		•	•		•	•				•	•
1FC _ Current	•	•	•	•	•	•	•	•	•	•	•	•	•				•				•	•	
8Z_ _ Glaze	•	•	•	•	•	•	•	•	•	•	•	•	•	•							•	•	
47_ _ Ground Cloth®	•	•	•	•	•	•	•	•	•	•	•	•	•	•	•		•	•	•	8	•	•	
5D_ _ Kira 2	2	2	2	•	•	•	•	2	•	•	•	•	•	•	•		•	•			•	•	
8L_ _ Savannah	•	20	•	•	•	•	•	•	•	•	•	•	•	•		•						•	
8W_ _ Strands	•	•	•	•	•	•	•	•	•	•	•		•	•	•		•	•			•	•	
22V_ _ String Plaid	2	2	2	•		•	•	2	•	•	•	•	•	•	•		•	•					•
Price Category 4																							
2X_ _ Glisten	•	•	•	•	•	•	•	•	•	•	•	•	•	•				•				•	
22L_ _ Loft A		2	2	•	•	•	•	2	•	•	•	•	•	•	•	•	•	•	•	8	•	•	
6S_ _ Quilty	2	2	2	•	•	•	•	2			•		•	•							•		•
Price Category 5																							
14A_ _Hopsak	2	2	2	•	•		•	2	•	•	•	•	•	•					•			•	•
Price Category 6																							
No fabrics available at this time.																							

1 *Refer to price book appendices and Omni for COM information.*

2 *Available on all products except 54" and 60" wide.*

4 *Not available on Action Office (AO®) acoustical panels.*

5 *(8R_ _), (8T_ _), (85_ _), and (5S_ _) not available on AO acoustical panels and not available on 54"- or 60"-wide products.*

6 *Not available on Action Office (AO®) connectors, cable management, and spacers.*

8 *Available in select colors. See the "Proprietary Textile Colors — Workspaces" appendix.*

18 *Available on seating products in select colors. See the "Proprietary Textile Colors — Seating" appendix.*

19 *Not available in Grosgrain (84_ _) fabric colors 8401, 8405, and 8413.*

20 *Available only on Ethospace B-Style.*

21 *Not available on Ethospace connectors and cable management tiles.*

22 *Not available as railroaded application option for* Chain *(2V00) on Canvas Extended Width Tiles.*

Application Note: Herman Miller cannot guarantee material/pattern alignment in adjacent products. For example, a fabric's pattern may not align from one screen to the next, or from one panel to the next.

Price Category 1

Customer's Own Material	
See Order Information in Appendices.	
Assigned lead-time textile. A	

Chain	
66" wide	
100% recycled polyester	
2V01	Pearl
2V02	Oyster
2V03	Wheat
2V04	Linen
2V05	Wicker
2V06	Bamboo
2V07	Sage
2V08	Spring Wood
2V09	Iceberg

Crossing	
54" wide	
86% antimony-free polyester	
14% polyester	
8T03	Wicker *
8T04	Porcelain *
8T05	Warm Grey *
8T06	Sepia
8T07	Pumpkin
8T08	Copper
8T09	Cranberry
8T10	Tomato
8T11	Mulberry
8T12	Plum
8T13	Green Apple
8T14	Loden
8T15	Spruce
8T16	Periwinkle
8T17	Cerulean
8T18	Indigo
8T19	Shale *
8T20	Brownstone
8T21	Bark
8T22	Tin *
8T23	Graphite
8T24	Black

Crossing	
For workspaces products only.	
54" wide	
86% antimony-free polyester	
14% polyester	
8501	Ivory *
8502	Oyster *

* Colors available on Exclave®
Video-friendly Tackable
Boards and Stowage Tackable
Backdrop

Dex	
54" wide	
50% recycled polyester	
50% polyester	
3DE01	Frost
3DE02	Silver Pine
3DE03	Stone
3DE04	Shale
3DE05	Charcoal

Gem	
54" wide	
100% antimony-free polyester	
9502	Tangerine
9503	Red
9507	Twilight
9508	Bayou
9510	Berry Blue
9511	Aqua Green
9512	Green Apple
9514	Black
9515	Slate Grey
9516	Fog

Grasscloth	
66" wide	
100% recycled polyester	
2I01	Silver Birch
2I02	Pampas
2I03	Sedge
2I07	Lea
2I08	Taro
2I09	Steam Grey
2I10	Cayenne
2I11	Bottle Green
2I12	Surf
2I13	Gravel

Monologue	
54" wide	
56% recycled polyester	
44% polyester	
1MN01	Linen
1MN02	Alabaster
1MN03	Truffle
1MN04	Folkstone
1MN05	Silver Pine
1MN06	Slate
1MN07	Seed
1MN08	Yellow Oxide
1MN09	Persimmon
1MN10	Tundra
1MN11	Meadow
1MN12	Blue Sky
1MN13	Blue Spruce
1MN14	Deep Sea

Resonance	
66" wide	
100% polyester	
5T04	Greige
5T05	Porcelain
5T06	Alabaster
5T15	Iris
5T28	Sugar
5T47	Tobacco
5T54	Saltbush
5T57	Seed
5T58	Sepia
5T60	Iceberg
5T65	Red
5T67	Boysenberry
5T68	Pistachio
5T69	Green Apple
5T71	Jade
5T72	Blue Green
5T74	Twilight

Silkworm	
66" wide	
58% recycled polyester	
42% polyester	
2M01	Cocoon
2M02	Pongee
2M03	Saffron
2M04	Tussah
2M05	Ceylon
2M06	Jasmine
2M07	Shale
2M08	Monsoon

Price category 1 continued on next page

Price Category 1
continued

Slant	
66” wide	
51% polyester	
49% recycled polyester	
22F04	Pesto
22F06	Neptune
22F07	Blueberry
22F10	Pumpkin
22F12	Silver Birch
22F13	Bluestone
22F15	Shale

Tailored	
Assigned lead-time textile. A	
54” wide	
56% polyester	
44% recycled polyester	
23501	Studio White *
23502	Sugar
23503	Tomato
23504	Orchid
23505	Boysenberry
23506	Chive
23507	Bluegrass
23508	Cobalt
23509	Cadet
23510	Fog
23511	Graphite
23512	Black
23513	Coffee

* Color not available on Canvas Tiles.

Whisper	
54” wide	
73% recycled polyester	
27% polyester	
1WS01	Sand Dollar
1WS02	Pebble
1WS03	Silver Birch
1WS04	Iceberg
1WS05	Silver Pine
1WS06	Carbon
1WS07	Cumin
1WS08	Adobe
1WS09	Strawberry
1WS10	Blush
1WS11	Eggplant
1WS12	Willow
1WS13	Sea Grass
1WS14	Pool
1WS15	Blueberry

Price Category 2

Aristo	
54” wide	
88% recycled polyester	
12% polyester	
Acrylic backing	
3AR01	Forest Moss
3AR02	Light Brindle
3AR03	Mink
3AR04	Copper
3AR05	Adobe
3AR06	Cherry
3AR07	Lilac
3AR08	Green Apple
3AR09	Surf
3AR10	Waterfall
3AR11	Cadet
3AR12	Tin
3AR13	Pewter
3AR14	Grey Brindle
3AR15	Grey Black

Code	
66” wide	
100% Repreve recycled polyester	
1CD01	Linen
1CD02	Khaki
1CD03	Iceberg
1CD04	Zinc
1CD05	Blue Black

Cord	
66” wide	
51% antimony-free polyester	
49% polyester	
5101	Ivory
5102	White Ash
5103	Linen
5104	Bamboo
5105	Sepia
5106	Wicker
5107	Sesame
5108	Kiwi Green
5109	Bayou
5110	Shade
5111	Spring Wood
5112	Summer White

Crepe	
54” wide	
100% recycled polyester	
9201	Licorice
9203	Smoke
9207	Cherry
9209	Claret
9212	Raisin
9218	Aquamarine
9223	Cadet
9241	Beachglass
9243	Midnight
9244	Artichoke
9248	Warm White *
9249	Stone *
9250	Earth
9251	Fog *
9252	Slate Grey
9253	Yellow Dark
9254	Coral
9255	Blush Grey *
9256	Wild Berry
9257	Clover
9258	Caribbean
9259	Cerulean
9260	Brownstone
9261	Shale
9262	Graphite
9263	Tomato
9264	Green Apple

* Colors available on Exclave® Video-friendly Tackable Boards and Stowage Tackable Backdrop.

Price category 2 continued on next page

Price Category 2
continued

Epic	
54” wide	
56% recycled polyester	
44% polyester	
Acrylic backing	
3EP01	Alabaster
3EP02	Smoke
3EP03	Falcon
3EP04	Citrus Spring
3EP05	Copper
3EP06	Urban Orange
3EP07	Poppy
3EP08	Wild Plum
3EP09	Sugar Plum
3EP10	Clover
3EP11	Loden
3EP12	Everglade
3EP13	Mist
3EP14	Peacock
3EP15	Cadet
3EP16	Indigo
3EP17	Spring Wood
3EP18	Grey Brindle
3EP19	Seed
3EP20	Carbon Dark

Fish Net	
55” wide	
100% recycled polyester	
22Q01	Oyster
22Q02	Stone
22Q03	Citrus
22Q04	Curry
22Q05	Chipotle
22Q06	Cherry
22Q07	Fuschia
22Q08	Claret
22Q09	Purple
22Q10	Clover
22Q11	Pesto
22Q12	Peacock
22Q13	Lagoon
22Q14	Twilight
22Q15	Bluestone
22Q16	Storm
22Q17	Black
22Q18	Cocoa

Frost	
66” wide	
100% recycled polyester	
5703	Porcelain
5704	Honey
5705	Iceberg
5706	Sage
5710	Sable Grey

Grosgrain	
66” wide	
100% recycled polyester	
8401	Pearl * **
8402	White Ash
8403	Warm Grey
8404	Khaki
8405	Oyster *
8406	Celadon
8408	Spa Blue
8409	Bud
8410	Kiwi Green
8411	Bayou
8412	Tin
8413	Iceberg *

* Colors not available on Canvas Dock Mounted Screens, Locale® Workbase Screen, Public Office Landscape® Screen/Desk Top Divider, and Thrive® Personal Side Screen.
** Color not available on Canvas Tiles.

Horizon	
54” wide	
65% antimony-free polyester	
35% polyester	
4N01	Rye Grass
4N02	Sugar Pine
4N03	Silver Pine
4N04	White Ash
4N05	Spring Wood
4N06	Tamarack
4N07	Mushroom
4N08	Haystack
4N09	Oat Grass
4N10	Forest Moss
4N11	Hickory
4N12	Beech Nut
4N13	Pine Cone
4N14	Poplar
4N15	Elderberry

Loom	
54” wide	
100% polyester	
1LM01	Linen
1LM02	Brown Sugar and Spice
1LM03	Brick and Mortar
1LM04	Salt and Pepper
1LM05	Black
1LM06	Lemongrass
1LM07	Poppy
1LM08	Wild Berry
1LM09	Loden
1LM10	Jade
1LM11	Deep Sea

Medley	
54” wide	
100% polyester	
1HA01	Stone *
1HA02	Trail
1HA03	Charcoal
1HA04	Cinder
1HA05	Citrus
1HA06	Papaya
1HA07	Chutney
1HA08	Tundra
1HA09	Feather Grey *
1HA10	Chartreuse
1HA11	Loden
1HA12	Peacock
1HA13	Bayou *
1HA14	Blue Grotto
1HA15	Blueberry
1HA22	Khaki
1HA23	Pewter
1HA24	Yellow Oxide
1HA25	Vintage Rose
1HA26	Raspberry
1HA27	Acai Berry

* Colors available on Exclave® Video-friendly Tackable Boards and Stowage Tackable Backdrop

Price category 2 continued on next page

Price Category 2
continued

Rain	
66” wide	
100% recycled polyester	
3RA01	Iceberg
3RA02	Frost
3RA03	Pewter
3RA04	Graphite
3RA05	Warm White
3RA06	Linen
3RA07	Rye
3RA08	Light Brindle

Rivet	
54” wide	
100% recycled polyester	
1RV01	Twig
1RV02	Deep Clay
1RV03	Woodrose
1RV04	Otter
1RV05	Hemlock
1RV06	Olive
1RV07	Lagoon
1RV08	Deep Sea
1RV09	Charcoal
1RV10	Grey Brindle

Sequel	
54” wide	
100% vinyl	
100% polyester knit backing	
Resilience® finish	
3SL01	White
3SL02	Pebble
3SL03	Mushroom
3SL04	Stone
3SL05	Chestnut
3SL06	Rattan
3SL07	Black Cherry
3SL08	Tundra
3SL09	Seal
3SL10	Blue Fog
3SL11	Folkstone
3SL12	Shale
3SL13	Slate Grey
3SL14	Charcoal
3SL15	Carbon Dark

Twine	
66” wide	
100% recycled polyester	
3TW01	Silver Birch
3TW02	Ivory
3TW03	Alabaster
3TW04	Bamboo
3TW05	Iceberg
3TW06	Charcoal
3TW07	Feather Grey
3TW08	Shale

Twist	
54” wide	
80% antimony-free polyester	
13% recycled polyester	
7% polyester	
8R05	Wicker
8R10	Poppy
8R14	Tin
8R15	Shale
8R16	Graphite
8R17	Birch
8R18	Sepia
8R22	Blueberry
8R23	Green Apple
8R26	Gunmetal
8R27	Cinder
8R28	Citrus
8R29	Pekoe
8R30	Tangerine
8R31	Red Plum
8R32	Wisteria
8R33	Forest
8R34	Jade Dark
8R35	Waterfall
8R36	Midnight Blue
8R37	Carbon Dark

Twist	
For workspaces products only.	
54” wide	
80% antimony-free polyester	
13% recycled polyester	
7% polyester	
5S01	Pearl
5S02	Ivory
5S03	Oyster

Well Suited	
55” wide	
79% polyester	
21% recycled polyester	
22T01	Oyster
22T02	Raffia
22T03	Peppermint
22T08	Cool Grey
22T16	Jade
22T17	Peacock
22T18	Blueberry

Price Category 3

Bento	
54” wide	
100% antimony-free polyester	
7001	Frost
7002	Linen
7003	Khaki
7004	Truffle
7005	Grey Black
7006	Pumpkin
7007	Cranberry
7008	Everglade
7009	Cobalt

Current	
66” wide	
100% antimony-free polyester	
1FC1	Oyster
1FC2	Linen
1FC3	Iceberg
1FC4	Silver Pine
1FC5	Apricot
1FC6	Cumin
1FC7	Green Apple
1FC8	Slate Blue
1FC9	Metal

Glaze	
66” wide	
100% recycled polyester	
8Z01	Wicker
8Z02	Honey
8Z03	Porcelain
8Z04	Celadon
8Z06	Rye
8Z07	Frost
8Z08	Silver Birch

Price category 3 continued on next page

Price Category 3
continued

Ground Cloth®
66” wide
100% polyester

4701	Vapor Grey
4721	Warm White *
4722	Fog *
4723	Straw *
4724	Red Orange *
4725	Wild Berry *
4726	Green Apple *
4727	Caribbean *
4728	Midnight *
4729	Cappuccino *

* Colors available on Exclave® Video-friendly Tackable Boards and Stowage Tackable Backdrop

Kira 2
54” wide
100% recycled polyester

5D11	Flaxen
5D12	Papyrus
5D13	Oasis
5D14	Incense
5D15	Ash
5D16	Falcon

Savannah
66” wide
76% recycled polyester
24% polypropylene

8L01	Pearl
8L02	Oyster
8L03	Wheat
8L04	Jute
8L05	Bamboo
8L06	Metal
8L07	Linen
8L08	Celadon
8L09	Moss
8L10	Frost
8L11	Shale
8L12	Pewter

Strands
66” wide
100% recycled polyester

8W01	Pebble
8W02	Porcelain
8W03	Taupe
8W04	Honey
8W05	Khaki
8W06	Rye
8W07	Wicker
8W08	Tin
8W09	Cool Grey

String Plaid
54” wide
100% recycled polyester

22V01	Warm White on Khaki
22V02	Mint on Yellow Green
22V03	Mist on Blue Grey
22V04	Sky Blue on Red
22V05	Lime on Magenta
22V06	Bright Green on Green
22V07	Aqua Blue on Cerulean
22V08	Ivory on Black

Price Category 4

Glisten
66” wide
84% polyester
16% recycled polyester

2X02	Rye
2X05	Iceberg
2X09	Pewter
2X10	Ash

Loft
Assigned lead-time textile. A
54” wide
100% wool

22L01	Heathered Light Green
22L02	Heathered Dark Green
22L03	Heathered Turquoise
22L04	Heathered Navy
22L08	Heathered Grey *
22L09	Heathered Blue *
22L11	Heathered Dark Grey

* Colors available on Exclave® Video-friendly Tackable Boards and Stowage Tackable Backdrop

Quilty
56” wide
100% antimony-free polyester
GreenShield

6S03	Khaki
6S04	Straw
6S07	Brick
6S10	Mink
6S11	Green Apple
6S13	Indigo
6S14	Zinc
6S15	Slate
6S16	Beachwood
6S17	Paprika
6S18	Plum
6S19	Juniper
6S20	Grey Black

Price Category 5

Hopsak
56” wide
100% recycled polyester

14A20	Black
14A22	Raw Umber Dark
14A26	Grey Blue Dark
14A30	Sepia Dark
14A38	Emerald Dark
14A39	Yellow Dark
14A40	Orange
14A41	Sienna
14A42	Olive Green Dark
14A43	Crimson
14A44	Crimson Dark Dark
14A45	Violet Dark
14A46	Pink Dark Dark
14A47	Ultramarine Dark
14A48	Cobalt Blue
14A49	Terra Cotta
14A50	Ochre Dark

For more information about our products and services or to see a list of dealers, please visit us at HermanMiller.com or call (800) 851 1196.

© 2020 Herman Miller, Inc., Zeeland, Michigan

Distribution Rights

Working together since 1956, Herman Miller and Vitra are the authentic sources of designs by Charles and Ray Eames, Alexander Girard, and George Nelson. All the designs shown in this book are protected by law. Herman Miller has obtained all rights to make and sell these designs. Also, Herman Miller holds exclusive worldwide manufacturing and distribution rights for these products with the following exceptions:

Charles and Ray Eames, George Nelson, and Alexander Girard—Worldwide distribution rights for furniture in all areas except Europe and the Middle East. For those areas, please contact Vitra.

Isamu Noguchi—Worldwide distribution rights for the Noguchi Rudder Table. Distribution rights for the Noguchi Table in North America and Central America only. For all other areas, please contact Vitra.

Magis—Exclusive distribution rights in the US and Canada. For all other areas, please contact Magis.

Mattiazzi—Exclusive distribution rights in the US and Canada. For all other areas, please contact Mattiazzi.

® HermanMiller, ⓗ, 3D Intelligent, AO, Action Office, Aeron, ArcSpan, Aside, Avall, Bubble Lamps, Canvas Office Landscape, Caper, Celle, Co/Struc, Daisyone, Distil, Eames, Eco-Dematerialized, Embody, Envelop, Ethospace, Exclave, Fine-Tune, FlexFront, Flo, Formcoat, Formwork, Ground Cloth, Herman Miller for the Home, Herman Miller for Healthcare, Intersect, Kinemat, Layout Studio, Lifework, Limerick, Live Unframed, Living Office, Locale, Maharam, Meridian, Mirra, Motia, Pellicle, Perspectives, Plex, PostureFit, Public Office Landscape, Resolve, Rodney, Sayl, Setu, Thrive, Tu, Wishbone, and Y-Tower are among the registered trademarks of Herman Miller, Inc., and its owned subsidiaries.

™ 8Z Pellicle, About Face, AireWeave, Albert, Backfit, Bubbletack, Burdick Group, Butterfly Back, Cellular Suspension, Clam, Commend, Compass, Connect, Cosm, DOT, Duracare, Durawrap, Eames Soft Pad, EnhancedAccess, Everywhere, Flex-Edge, Flute, Harmonic, Headway, Herman Miller Select, Hopsak 2, Intent, Iota, Jaw, Keyless Entry, Keyn Chair Group by Herman Miller, Latitude, Lino, Locale, Logic Mini, Logic Power Access Solutions, Live Platform, Loop, Lyris, Lyris 2, Made-to-Measure Storage, Mora, Multiscrim, Nelson, Nevi, Overlay, Pari, Pixelated Support, PostureFit SL, Prospect, Renew, Sense, Soft Pad, Stackable, Stackable Storage, Striad, Swoop, Tone, TriFlex, Twist, Ubi, Valor, Verus, Vista and Wireframe are among the trademarks of Herman Miller, Inc., and its owned subsidiaries.

SM Herman Miller Options is among the service marks of Herman Miller, Inc.

AAP™ is a trademark of Extron Electronics.

Alexander Girard® is a registered trademark of The Alexander Girard Estate.

Chemsurf® is a registered trademark of Wilsonart International.

Corian® is a registered trademark of E. I. du Pont de Nemours and Company Corporation.

Crypton® is a registered trademark of Crypton, Inc.

DACRON® is a registered trademark of INVISTA S.a r.l.

Danzer® is a registered trademark of Danzer Holding AG.

Decora® is a registered trademark of Leviton Manufacturing Co., Inc.

Edelman® Leather is a registered trademark of Edelman Leather, Inc.

Extron® is a registered trademark of RGB Systems, Inc.

FENIX NTM® is a registered trademark of Arpa Industriale S.p.A.

FLEXNET™ is a trademark of Milliken & Company.

Floor Saver Glide® is a registered trademark of Carpin Manufacturing, Inc.

Geiger® is a registered trademark, and Bumper™, Saiba™, and Ward Bennett™ are trademarks, of Geiger International.

Goetz™ is a trademark of Mark W. Goetz.

Hang-It-All® is a registered trademark of Lucia Eames Demetrios, d.b.a. Eames Office.

Holophane® is a registered trademark of Holophane.

Ingeo™ is a trademark of Cargill Dow LLC.

iPad® is a registered trademark of Apple, Inc.

Leviton® is a registered trademark of Leviton Manufacturing Co., Inc.

LifeSize® is a registered trademark of LifeSize Communications, Inc.

Magis®, Bombo®, and Me Too® are registered trademarks of Magis S.p.A.

Microsoft® and Natural® Keyboard are registered trademarks of Microsoft Corporation.

Noguchi® and the Noguchi table configuration (trade dress) are registered trademarks, and Rudder Table™ is a trademark, of The Isamu Noguchi Foundation and Garden Museum.

Place Textiles® is a registered trademark of Place Textiles.

SuperSeat™ is a trademark of Dahti Seating, a division of ITW.