Prices effective September 3, 2019

Published September 2019

Everywhere™ Tables

Introduction	**page 2**
Everywhere™ Tables	**3**
Standard-Height Tables	5
Standard-Height Table Legs and Bases	58
Standing-Height Tables	62
Occasional Tables	68
Screens	74
Power and Data Support	93
Accessories	111
Indices	**143**
By Name	143
By Number	145
Appendices	
20-Day or Less/Assigned Lead-Time Order Information	
Vary Easy Program	
Stain-to-Match Program	

For the latest materials information, refer to the Materials pages on HermanMiller.com.

Introduction

A Note on the Organization of This Book

There are a few signals that will help you understand the organization of this book. Once you know them, you should be able to find your way around easily.

Like a newspaper, this book is formatted with columns of text and illustrations that run vertically.

Information wraps from one column to the next and continues for as many pages as it needs to.

Black bars are clues.

A black bar at the top of a page signals the start of information about a product.

This information is divided into two sections, each signaled by a black bar. Product Information includes a description, additional notes, and dimensional drawings. Specification Information, which always begins at the top of a column, includes a series of steps. Each step represents a decision you need to make in order to complete your product number. Steps must be followed sequentially. The number of pages needed to complete information on a product varies; some will be complete in one page; others may fill three or four pages. Just continue going through the steps until you run into the next product, signaled by the black bar at the top of the page.

Black tabs running along the outside edge of the page help you locate what section you are in or what section you want to go to. You can thumb forwards or backwards to find a section; tabs and text appear on both sides of the page.

The additional pages in the back of the book include the appendices and indices. They are signaled by a long black bar running along the outside edge of the page.

The index is presented two ways.

The first index is in alphabetical order by product name. It can be helpful if you are new to the products and numbering scheme or if you are looking for a type of product, such as work chair or round table.
The second index is by product number. It lists, in alphanumeric order, the base product number, typically a five-digit number.

General Information

This book is effective September 3, 2019, subject to change without notice. Products may be purchased from authorized Herman Miller dealers who will quote prices upon request. For more information about our products and services or to see a list of dealers, visit www.HermanMiller.com.

All prices are list prices. Additional services, such as planning services, design, storage, and installation, are not included and must be added to these prices when the additional services are requested.

Illustrations, specifications, and prices are based on the latest information at the time of publication. The right is reserved to make changes at any time without notice in prices, fabrics, finishes, materials, specifications, and models, and also to discontinue models and finishes.

Dimensions shown in the drawings are engineering drawing dimensions rounded up to the nearest 1/8". Product is shipped set up or knocked down. Products that include "Shipped knocked down" in the description require some assembly. If this statement does not appear in the description, the product is shipped assembled.

Service problems are normally handled by a Herman Miller authorized dealer. Where this cannot be accomplished on a local level, service problems should be referred to the Customer Care Representative for your region, Herman Miller, Inc., Zeeland, Michigan 49464.

20-Day or Less/Assigned Lead-Time Shipments

All products and options in this price book not designated by an Assigned Program icon [A] will ship in **20 business days or less** after being acknowledged by Herman Miller.

Products and options designated by an [A] are on the assigned lead-time program and may ship in 20 days, less than 20 days, or more than 20 days from order acknowledgement.

Standard-Height Tables

Standard-Height Table Legs and Bases

Standing-Height Tables

Occasional Tables

Screens

Power and Data Support

Accessories

Rectangular Table

DT1AE.
DT1AS.
DT1AT.

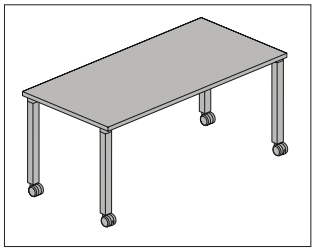

Product Information

Description

This rectangular table comes in multiple edge styles and has a laminate top with thermoplastic edge, laminate top with a thermoplastic backed plywood edge, veneer top and edge, or painted top and edge. It has multiple leg options, and is available with casters or glides. The caster option has 2 locking and 2 non-locking casters. Glides have 1/2″ leveling range. Shipped knocked down.

Height-adjustable legs have a 5″ range in 1″ increments.

Notes

18″ depth available with square edge only.

C-leg and D-leg cannot be used with either the 18″ deep or 36″ deep tops.

When specifying grommets (253, 254, 255), cutouts will be located in the center of table.

Cutouts available for all Connect™ power and data accessories (see Thrive® Portfolio). Cutouts will be located in the center, laterally, and approximately 3″ from the rear edge of surface.

Reinforcement channels are used under table tops 54″ and wider. They will be located along the center line for 18″ deep and 24″ deep surfaces, and 19″ from the front edge for 30″ deep surfaces.

For additional details on available edge options see Appendices.

For additional size, edge, finish, and cable management options, see Vary Easy Program in Appendices.

Note: UL listed when used with Connect single circuit electrical product (Y137x.) with post leg (P), T-leg (T) and C-leg (C) options.

Dimensions

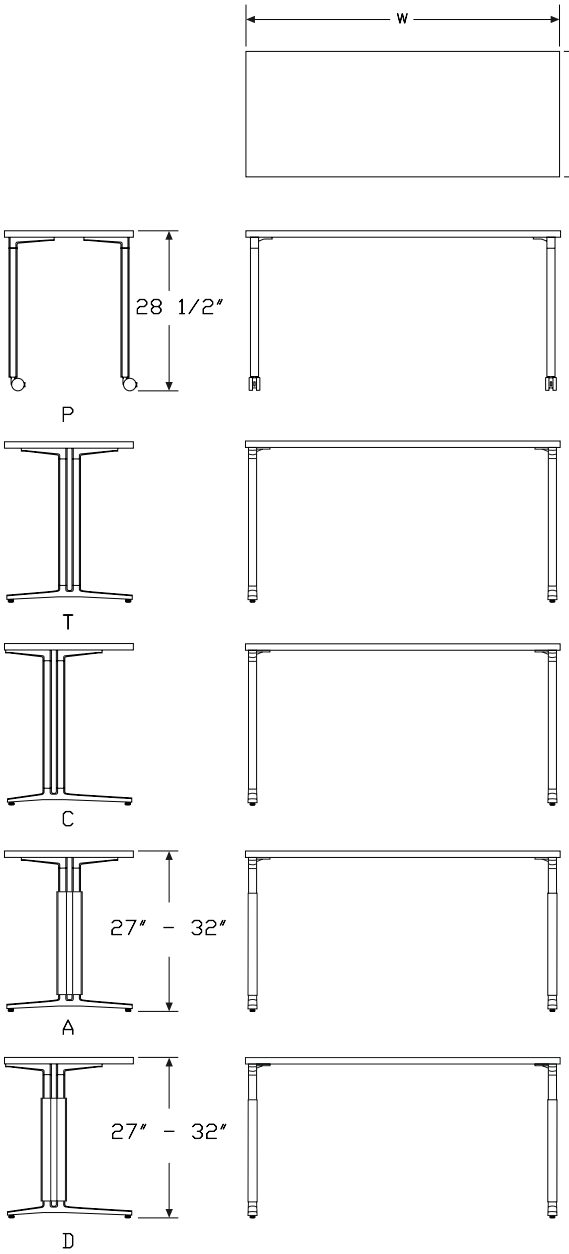

Specification Information

Step 1.

DT1A

Step 2. Edge

S. squared-edge
T. thin-edge
E. eased-edge

Step 3. Depth

For squared-edge (S.)

18 18″ deep
24 24″ deep
30 30″ deep
36 36″ deep

For thin-edge (T.) or eased-edge (E.)

24 24″ deep
30 30″ deep
36 36″ deep

Step 4. Width

For 18″ deep (18)

48 48″ wide
60 60″ wide
72 72″ wide

For 24″ deep (24) or 30″ deep (30)

36 36″ wide
42 42″ wide
48 48″ wide
54 54″ wide
60 60″ wide
66 66″ wide
72 72″ wide

For 36″ deep (36)

42 42″ wide
48 48″ wide
54 54″ wide
60 60″ wide
66 66″ wide
72 72″ wide

Step 5. Surface Material

For squared-edge (S.)

L laminate top/thermoplastic edge
U laminate top/universal edge
W veneer top/veneer edge A
P painted Formcoat® top/edge

For thin-edge (T.)

W veneer top/veneer edge A
P painted Formcoat® top/edge

For eased-edge (E.)

P painted Formcoat® top/edge

Step 6. Leg Type

For 18″ deep (18) or 36″ deep (36)

P post leg
T T-leg
A T-leg with height adjustment

For 24″ deep (24) or 30″ deep (30)

P post leg
T T-leg
A T-leg with height adjustment
C C-leg
D C-leg with height adjustment

Prices for Steps 1-6.

		LP	LT	LA	LC	LD	UP
DT1AS. 18	**48**	$766	993	1243	—	—	766
	60	$841	1093	1365	—	—	841
	72	$908	1179	1474	—	—	908
24	**36**	$766	993	1243	993	1243	766
	42	$804	1045	1304	1045	1304	804
	48	$842	1095	1369	1095	1369	842
	54	$894	1162	1449	1162	1449	894
	60	$947	1230	1536	1230	1536	947
	66	$1013	1317	1646	1317	1646	1013
	72	$1086	1410	1759	1410	1759	1086

30	**36**	$796	1033	1290	1033	1290	796
	42	$835	1086	1357	1086	1357	835
	48	$879	1140	1422	1140	1422	879
	54	$930	1207	1509	1207	1509	930
	60	$986	1280	1599	1280	1599	986
	66	$1054	1369	1710	1369	1710	1054
	72	$1128	1463	1831	1463	1831	1128
36	**42**	$911	1173	1476	—	—	911
	48	$924	1164	1489	—	—	924
	54	$1009	1254	1574	—	—	1009
	60	$1028	1269	1588	—	—	1028
	66	$1085	1390	1750	—	—	1085
	72	$1155	1478	1859	—	—	1155

		UT	UA	UC	UD	WP	WT
DT1AS. 18	**48**	$993	1243	—	—	933	1230
	60	$1093	1365	—	—	1032	1360
	72	$1179	1474	—	—	1120	1472
24	**36**	$993	1243	993	1243	933	1230
	42	$1045	1304	1045	1304	982	1295
	48	$1095	1369	1095	1369	1035	1362
	54	$1162	1449	1162	1449	1099	1447
	60	$1230	1536	1230	1536	1169	1536
	66	$1317	1646	1317	1646	1255	1649
	72	$1410	1759	1410	1759	1347	1768
30	**36**	$1033	1290	1033	1290	973	1282
	42	$1086	1357	1086	1357	1022	1348
	48	$1140	1422	1140	1422	1079	1419
	54	$1207	1509	1207	1509	1145	1508
	60	$1280	1599	1280	1599	1218	1601
	66	$1369	1710	1369	1710	1307	1717
	72	$1463	1831	1463	1831	1406	1840
36	**42**	$1173	1476	—	—	1307	1573
	48	$1164	1489	—	—	1341	1598
	54	$1254	1574	—	—	1449	1711
	60	$1269	1588	—	—	1497	1760
	66	$1390	1750	—	—	1697	2110
	72	$1478	1859	—	—	1778	2340

		WA	WC	WD	PP	PT	PA
DT1AS. 18	**48**	$1551	—	—	882	1143	1429
	60	$1712	—	—	970	1258	1571
	72	$1856	—	—	1047	1358	1694

24	**36**	$1551	1230	1551	882	1143	1429
	42	$1633	1295	1633	924	1201	1498
	48	$1717	1362	1717	971	1260	1575
	54	$1824	1447	1824	1027	1335	1669
	60	$1938	1536	1938	1091	1416	1767
	66	$2076	1649	2076	1166	1516	1892
	72	$2225	1768	2225	1249	1619	2023
30	**36**	$1616	1282	1616	913	1189	1487
	42	$1700	1348	1700	962	1249	1562
	48	$1788	1419	1788	1010	1310	1637
	54	$1899	1508	1899	1067	1387	1734
	60	$2017	1601	2017	1135	1472	1839
	66	$2163	1717	2163	1212	1575	1966
	72	$2317	1840	2317	1298	1684	2104
36	**42**	$1850	—	—	1050	1349	1695
	48	$1882	—	—	1063	1338	1712
	54	$1991	—	—	1161	1442	1808
	60	$2066	—	—	1183	1459	1826
	66	$2410	—	—	1201	1571	1992
	72	$2704	—	—	1216	1697	2136

		PC	PD
DT1AS. 24	**36**	$1143	1429
	42	$1201	1498
	48	$1260	1575
	54	$1335	1669
	60	$1416	1767
	66	$1516	1892
	72	$1619	2023
30	**36**	$1189	1487
	42	$1249	1562
	48	$1310	1637
	54	$1387	1734
	60	$1472	1839
	66	$1575	1966
	72	$1684	2104

		UT	UA	UC	UD	WP	WT
DT1AT. 24	**36**	—	—	—	—	$1120	1480
	42	—	—	—	—	$1177	1553
	48	—	—	—	—	$1243	1636
	54	—	—	—	—	$1320	1738
	60	—	—	—	—	$1404	1843
	66	—	—	—	—	$1506	1978
	72	—	—	—	—	$1615	2123

30	36	—	—	—	—	$1166	1537
	42	—	—	—	—	$1227	1616
	48	—	—	—	—	$1295	1703
	54	—	—	—	—	$1374	1807
	60	—	—	—	—	$1461	1921
	66	—	—	—	—	$1570	2059
	72	—	—	—	—	$1684	2208
36	42	—	—	—	—	$1570	1887
	48	—	—	—	—	$1609	1916
	54	—	—	—	—	$1742	2052
	60	—	—	—	—	$1798	2114
	66	—	—	—	—	$2037	2529
	72	—	—	—	—	$2130	2808

		WA	WC	WD	PP	PT	PA
DT1AT. 24	36	$1862	1480	1862	938	1218	1522
	42	$1959	1553	1959	985	1278	1597
	48	$2059	1636	2059	1032	1341	1678
	54	$2189	1738	2189	1094	1421	1778
	60	$2324	1843	2324	1162	1509	1882
	66	$2491	1978	2491	1243	1612	2016
	72	$2670	2123	2670	1329	1725	2156
30	36	$1941	1537	1941	975	1265	1583
	42	$2040	1616	2040	1024	1329	1660
	48	$2144	1703	2144	1075	1395	1744
	54	$2279	1807	2279	1139	1481	1848
	60	$2419	1921	2419	1207	1569	1959
	66	$2594	2059	2594	1289	1678	2094
	72	$2780	2208	2780	1380	1795	2242
36	42	$2220	—	—	1117	1437	1806
	48	$2260	—	—	1133	1425	1823
	54	$2388	—	—	1236	1535	1927
	60	$2481	—	—	1260	1557	1945
	66	$2892	—	—	1306	1623	2169
	72	$3243	—	—	1406	1820	2277

		PC	PD
DT1AT. 24	36	$1218	1522
	42	$1278	1597
	48	$1341	1678
	54	$1421	1778
	60	$1509	1882
	66	$1612	2016
	72	$1725	2156
30	36	$1265	1583
	42	$1329	1660
	48	$1395	1744
	54	$1481	1848
	60	$1569	1959
	66	$1678	2094
	72	$1795	2242

		WA	WC	WD	PP	PT	PA
DT1AE. 24	36	—	—	—	$938	1218	1522
	42	—	—	—	$985	1278	1597
	48	—	—	—	$1032	1341	1678
	54	—	—	—	$1094	1421	1778
	60	—	—	—	$1162	1509	1882
	66	—	—	—	$1243	1612	2016
	72	—	—	—	$1329	1725	2156
30	36	—	—	—	$975	1265	1583
	42	—	—	—	$1024	1329	1660
	48	—	—	—	$1075	1395	1744
	54	—	—	—	$1139	1481	1848
	60	—	—	—	$1207	1569	1959
	66	—	—	—	$1289	1678	2094
	72	—	—	—	$1380	1795	2242
36	42	—	—	—	$1117	1437	1806
	48	—	—	—	$1133	1425	1823
	54	—	—	—	$1236	1535	1927
	60	—	—	—	$1260	1557	1945
	66	—	—	—	$1315	1711	2187
	72	—	—	—	$1411	1830	2277

		PC	PD
DT1AE. 24	36	$1218	1522
	42	$1278	1597
	48	$1341	1678
	54	$1421	1778
	60	$1509	1882
	66	$1612	2016
	72	$1725	2156
30	36	$1265	1583
	42	$1329	1660
	48	$1395	1744
	54	$1481	1848
	60	$1569	1959
	66	$1678	2094
	72	$1795	2242

Step 7.

Top Finish

For laminate top/thermoplastic edge (L) or laminate top/universal edge (U)

76	light brown walnut	+$0
91	white	+$0
98	studio white	+$0
8Q	folkstone grey	+$0
CL	cool grey neutral	+$0
HF	inner tone light	+$0
HM	natural maple	+$0
HP	light anigre	+$0
HT	inner tone	+$0
HX	aged cherry	+$0
HY	walnut on cherry	+$0
LA	light ash	+$0
LBA	clear on ash	+$0
LBR	phantom ecru	+$0
LBS	phantom cocoa	+$0
LBU	medium matte walnut	+$0
LBV	warm grey teak	+$0
LBB	oak on ash	+$0
LBC	walnut on ash	+$0
LBD	dark brown walnut	+$0
LBE	medium red walnut	+$0
LBF	neutral twill	+$0
LBG	sarum twill	+$0
LBH	earthen twill	+$0
LBJ	graphite twill	+$0
LBM	crisp linen	+$0
LBN	classic linen	+$0
LBP	casual linen	+$0
LBQ	white twill	+$0
LU	soft white	+$0
OG	honey maple	+$0
WL	sandstone	+$0
WN	warm grey neutral	+$0

Top/Edge Finish: Wood Veneer

For veneer top/veneer edge (W)

2U	light brown walnut A	+$50
40	dark brown walnut A	+$50
ED	aged cherry A	+$50
EK	medium red walnut A	+$50
EW	medium matte walnut A	+$50
ET	clear on ash A	+$50
EU	oak on ash A	+$50
EV	walnut on ash A	+$50
UL	natural maple A	+$50
UX	walnut on cherry A	+$50

Top/Edge Finish: Opaque Formcoat®

For painted Formcoat® top/edge (P)

8Q	folkstone grey	+$0
91	white	+$0
CL	cool grey neutral	+$0
LU	soft white	+$0
WL	sandstone	+$0
WN	warm grey neutral	+$0

Step 8. Edge Finish

For laminate top/thermoplastic edge (L)

76	light brown walnut	+$0
8Q	folkstone grey	+$0
91	white	+$0
98	studio white	+$0
CL	cool grey neutral	+$0
LA	light ash	+$0
LBA	clear on ash	+$0
LBR	phantom ecru	+$0
LBS	phantom cocoa	+$0
LBU	medium matte walnut	+$0
LBV	warm grey teak	+$0
LBB	oak on ash	+$0
LBC	walnut on ash	+$0
LBD	dark brown walnut	+$0
LBE	medium red walnut	+$0
LBF	neutral twill	+$0
LBG	sarum twill	+$0
LBH	earthen twill	+$0
LBJ	graphite twill	+$0
LBK	pewter mesh	+$0
LBL	steel mesh	+$0
LBM	crisp linen	+$0

LBN	classic linen	+$0
LBP	casual linen	+$0
LBQ	white twill	+$0
WL	sandstone	+$0
WN	warm grey neutral	+$0
HF	inner tone light	+$0
HM	natural maple	+$0
HP	light anigre	+$0
HT	inner tone	+$0
HX	aged cherry	+$0
HY	walnut on cherry	+$0
LU	soft white	+$0
9V	tapestry beige	+$0
OG	honey maple	+$0

For laminate top/universal edge (U)

PLY	plywood edge	+$50

Step 9. Leg Finish

Metallic Paint

For post leg (P), T-leg (T), or C-leg (C)

CN	metallic champagne	+$0
EH	metallic bronze	+$0
MS	metallic silver	+$0

Sand Texture Paint

For post leg (P), T-leg (T), or C-leg (C)

BK	black	+$0

Smooth Paint

For post leg (P), T-leg (T), or C-leg (C)

8Q	folkstone grey	+$0
91	white	+$0
98	studio white	+$0
BU	black umber	+$0
CL	cool grey neutral	+$0
G2	graphite satin	+$0
HF	inner tone light	+$0
LU	soft white	+$0
MT	medium tone	+$0
SG	slate grey	+$0
WL	sandstone	+$0
WN	warm grey neutral	+$0

For post leg (P), T-leg (T), or C-leg (C)

CD	polished aluminum	+$110

Metallic Paint

For T-leg with height adjustment (A) or C-leg with height adjustment (D)

CN	metallic champagne	+$0
EH	metallic bronze	+$0
MS	metallic silver	+$0

Smooth Paint

For T-leg with height adjustment (A) or C-leg with height adjustment (D)

8Q	folkstone grey	+$0
91	white	+$0
98	studio white	+$0
BU	black umber	+$0
CL	cool grey neutral	+$0
G2	graphite satin	+$0
HF	inner tone light	+$0
LU	soft white	+$0
MT	medium tone	+$0
SG	slate grey	+$0
WL	sandstone	+$0
WN	warm grey neutral	+$0

For T-leg with height adjustment (A) or C-leg with height adjustment (D)

CD	polished aluminum	+$110

Step 10. Casters/Glides

20	casters	+$0
57	glides	+$0

Step 11. Grommets

For squared-edge (S.) with 18" deep (18)

NTG	no grommet	+$0

For 24" deep (24), 30" deep (30) AND 36" deep (36)

NTG	no grommet	+$0
253	cutout for Y1420. or Y1425. - 3 port	+$27
254	cutout for Y1420. or Y1425. - 5 port	+$27
255	cutout for Y1420. or Y1425. - 6 port	+$27

Square Table

DT1BE.
DT1BS.
DT1BT.

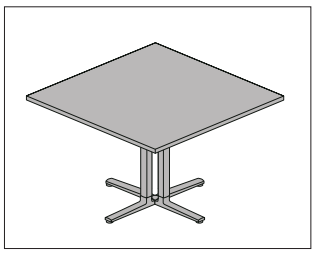

Product Information

Description

This square table comes in multiple edge styles and has a laminate top with thermoplastic edge, laminate top with a thermoplastic backed plywood edge, veneer top and edge, or painted top and edge. It has multiple leg/base options, and is available with casters or glides. The caster option has 2 locking and 2 non-locking casters. Glides have 1/2" leveling range. Shipped knocked down.

Notes

48" tops available only with post leg option for optimum stability.

42" top (4242) with 4-column base (X) available only with glides. Casters are not compatible with this top/base combination.

For additional details on available edge options see Appendices.

For additional size, edge, and finish options, see Vary Easy Program in Appendices.

UL listed when used with Connect™ single circuit electrical product (Y137x.) with post leg (P) option.

Dimensions

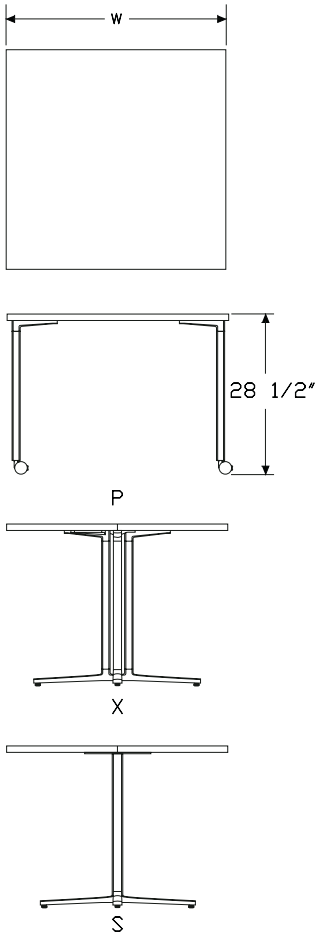

Specification Information

Step 1.

DT1B

Step 2. Edge

S. squared-edge
T. thin-edge
E. eased-edge

Step 3. Depth/Width

3030 30" deep x 30" wide
3636 36" deep x 36" wide
4242 42" deep x 42" wide
4848 48" deep x 48" wide

Step 4. Surface Material

For squared-edge (S.)

L laminate top/thermoplastic edge
U laminate top/universal edge
W veneer top/veneer edge [A]
P painted Formcoat® top/edge

For thin-edge (T.)

W veneer top/veneer edge [A]
P painted Formcoat® top/edge

For eased-edge (E.)

P painted Formcoat® top/edge

Step 5. Leg/Base Type

For 30" deep x 30" wide (3030)

P post leg
X 4-column base
S single-column base [A]

For 36" deep x 36" wide (3636)

P post leg
X 4-column base
S single-column base [A]

For 42" deep x 42" wide (4242)

P post leg
X 4-column base

For 48" deep x 48" wide (4848)

P post leg

Prices for Steps 1-5.

		P	X	S
DT1BS. 3030	**L**	$728	944	804
	U	$728	944	804
	W	$919	1212	1020
	P	$837	1088	924
3636	**L**	$874	1133	964
	U	$874	1133	964
	W	$1116	1466	1240
	P	$1005	1303	1107
4242	**L**	$1003	1302	—
	U	$1003	1302	—
	W	$1289	1694	—
	P	$1152	1496	—
4848	**L**	$1123	—	—
	U	$1123	—	—
	W	$1514	—	—
	P	$1290	—	—

		P	X	S
DT1BT. 3030	**W**	$1102	1455	1226
	P	$893	1159	985
3636	**W**	$1338	1759	1487
	P	$1068	1386	1179
4242	**W**	$1547	2035	—
	P	$1227	1595	—
4848	**W**	$1816	—	—
	P	$1375	—	—

		P	X	S
DT1BE. 3030	**P**	$893	1159	985
3636	**P**	$1068	1386	1179
4242	**P**	$1227	1595	—
4848	**P**	$1375	—	—

Step 6.

Top Finish

For laminate top/thermoplastic edge (L) or laminate top/universal edge (U)

76	light brown walnut	+$0
91	white	+$0
98	studio white	+$0
8Q	folkstone grey	+$0
CL	cool grey neutral	+$0
HF	inner tone light	+$0
HM	natural maple	+$0
HP	light anigre	+$0
HT	inner tone	+$0
HX	aged cherry	+$0
HY	walnut on cherry	+$0
LA	light ash	+$0
LBA	clear on ash	+$0
LBR	phantom ecru	+$0
LBS	phantom cocoa	+$0
LBU	medium matte walnut	+$0
LBV	warm grey teak	+$0
LBB	oak on ash	+$0
LBC	walnut on ash	+$0
LBD	dark brown walnut	+$0
LBE	medium red walnut	+$0
LBF	neutral twill	+$0
LBG	sarum twill	+$0
LBH	earthen twill	+$0
LBJ	graphite twill	+$0
LBM	crisp linen	+$0
LBN	classic linen	+$0
LBP	casual linen	+$0
LBQ	white twill	+$0
LU	soft white	+$0
OG	honey maple	+$0
WL	sandstone	+$0
WN	warm grey neutral	+$0

Top/Edge Finish: Wood Veneer

For veneer top/veneer edge (W)

2U	light brown walnut A	+$50
40	dark brown walnut A	+$50
ED	aged cherry A	+$50
EK	medium red walnut A	+$50
EW	medium matte walnut A	+$50
ET	clear on ash A	+$50
EU	oak on ash A	+$50
EV	walnut on ash A	+$50
UL	natural maple A	+$50
UX	walnut on cherry A	+$50

Top/Edge Finish: Opaque Formcoat®

For painted Formcoat® top/edge (P)

8Q	folkstone grey	+$0
91	white	+$0
CL	cool grey neutral	+$0
LU	soft white	+$0
WL	sandstone	+$0
WN	warm grey neutral	+$0

Step 7. Edge Finish

For laminate top/thermoplastic edge (L)

76	light brown walnut	+$0
8Q	folkstone grey	+$0
91	white	+$0
98	studio white	+$0
CL	cool grey neutral	+$0
LA	light ash	+$0
LBA	clear on ash	+$0
LBR	phantom ecru	+$0
LBS	phantom cocoa	+$0
LBU	medium matte walnut	+$0
LBV	warm grey teak	+$0
LBB	oak on ash	+$0
LBC	walnut on ash	+$0
LBD	dark brown walnut	+$0
LBE	medium red walnut	+$0
LBF	neutral twill	+$0
LBG	sarum twill	+$0
LBH	earthen twill	+$0
LBJ	graphite twill	+$0
LBK	pewter mesh	+$0
LBL	steel mesh	+$0
LBM	crisp linen	+$0

LBN	classic linen	+$0
LBP	casual linen	+$0
LBQ	white twill	+$0
WL	sandstone	+$0
WN	warm grey neutral	+$0
HF	inner tone light	+$0
HM	natural maple	+$0
HP	light anigre	+$0
HT	inner tone	+$0
HX	aged cherry	+$0
HY	walnut on cherry	+$0
LU	soft white	+$0
OG	honey maple	+$0

For laminate top/universal edge (U)

PLY	plywood edge	+$50

Step 8. Leg Finish

Metallic Paint

CN	metallic champagne	+$0
EH	metallic bronze	+$0
MS	metallic silver	+$0

Sand Texture Paint

BK	black	+$0

Smooth Paint

8Q	folkstone grey	+$0
91	white	+$0
98	studio white A	+$0
BU	black umber	+$0
CL	cool grey neutral	+$0
G2	graphite satin	+$0
HF	inner tone light	+$0
LU	soft white	+$0
MT	medium tone	+$0
SG	slate grey	+$0
WL	sandstone	+$0
WN	warm grey neutral	+$0
CD	polished aluminum	+$110

Step 9. Casters/Glides

20	casters	+$0
57	glides	+$0

For 4-column base (X)

57	glides	+$0

Round Table

DT1CE.
DT1CS.
DT1CT.

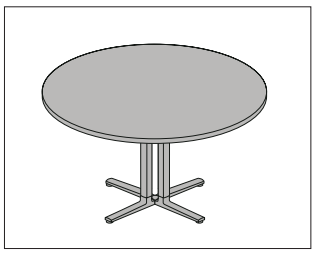

Product Information

Description

This round table comes in multiple edge styles and has a laminate top with thermoplastic edge, veneer top and edge, or painted top and edge. It has multiple leg/base options, and is available with casters or glides. The caster option has 2 locking and 2 non-locking casters. Glides have 1/2″ leveling range. Shipped knocked down.

Notes

48″ and 60″ tops available only with post leg option for optimum stability.

For additional details on available edge options see Appendices.

For additional size, edge, and finish options, see Vary Easy Program in Appendices.

UL listed when used with Connect™ single circuit electrical product (Y137x.) with post leg (P) option.

Dimensions

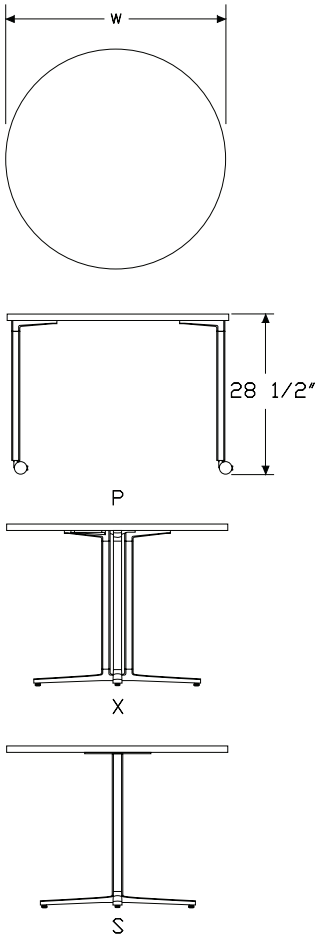

Specification Information

Step 1.

DT1C

Step 2. Edge

S.	squared-edge
T.	thin-edge
E.	eased-edge

Step 3. Diameter

30	30" diameter
36	36" diameter
42	42" diameter
48	48" diameter
60	60" diameter

Step 4. Surface Material

For squared-edge (S.)

L	laminate top/thermoplastic edge
W	veneer top/veneer edge [A]
P	painted Formcoat® top/edge

For thin-edge (T.)

W	veneer top/veneer edge [A]
P	painted Formcoat® top/edge

For eased-edge (E.)

P	painted Formcoat® top/edge

Step 5. Leg/Base Type

For 30" diameter (30) or 36" diameter (36)

P	post leg
X	4-column base
S	single-column base [A]

For 42" diameter (42)

P	post leg
X	4-column base

For 48" diameter (48) or 60" diameter (60)

P	post leg

Prices for Steps 1-5.

		P	X	S
DT1CS. 30	**L**	$835	1088	924
	W	$1058	1393	1174
	P	$962	1251	1063
36	**L**	$1005	1302	1060
	W	$1058	1686	1423
	P	$1155	1496	1219
42	**L**	$1152	1431	—
	W	$1485	1949	—
	P	$1326	1646	—
48	**L**	$1289	—	—
	W	$1741	—	—
	P	$1486	—	—
60	**L**	$1408	—	—
	W	$1906	—	—
	P	$1616	—	—

		P	X	S
DT1CT. 30	**W**	$1269	1673	1410
	P	$1024	1332	1133
36	**W**	$1269	2023	1708
	P	$1229	1595	1299
42	**W**	$1781	2338	—
	P	$1413	1753	—
48	**W**	$2088	—	—
	P	$1580	—	—
60	**W**	$2286	—	—
	P	$1723	—	—

		P	X	S
DT1CE. 30	**P**	$1024	1332	1133
36	**P**	$1229	1595	1299
42	**P**	$1413	1753	—
48	**P**	$1580	—	—
60	**P**	$1723	—	—

Step 6.

Top Finish

For laminate top/thermoplastic edge (L)

38	twilight	+$0
39	desert	+$0
76	light brown walnut	+$0
91	white	+$0
98	studio white	+$0
8Q	folkstone grey	+$0
CL	cool grey neutral	+$0
HF	inner tone light	+$0
HM	natural maple	+$0
HP	light anigre	+$0
HT	inner tone A	+$0
HX	aged cherry	+$0
HY	walnut on cherry	+$0
LA	light ash	+$0
LBA	clear on ash	+$0
LBR	phantom ecru	+$0
LBS	phantom cocoa	+$0
LBU	medium matte walnut	+$0
LBV	warm grey teak	+$0
LBB	oak on ash	+$0
LBC	walnut on ash	+$0
LBD	dark brown walnut	+$0
LBE	medium red walnut	+$0
LBF	neutral twill	+$0
LBG	sarum twill	+$0
LBH	earthen twill	+$0
LBJ	graphite twill	+$0
LBM	crisp linen	+$0
LBN	classic linen	+$0
LBP	casual linen	+$0
LBQ	white twill	+$0
LU	soft white	+$0
WL	sandstone	+$0
WN	warm grey neutral	+$0

Top/Edge Finish: Wood Veneer

For veneer top/veneer edge (W)

2U	light brown walnut A	+$50
40	dark brown walnut A	+$50
ED	aged cherry A	+$50
EK	medium red walnut A	+$50
EW	medium matte walnut A	+$50
ET	clear on ash A	+$50
EU	oak on ash A	+$50
EV	walnut on ash A	+$50
UL	natural maple A	+$50
UX	walnut on cherry A	+$50

Top/Edge Finish: Opaque Formcoat®

For painted Formcoat® top/edge (P)

8Q	folkstone grey	+$0
91	white	+$0
CL	cool grey neutral	+$0
LU	soft white	+$0
WL	sandstone	+$0
WN	warm grey neutral	+$0

Step 7. Edge Finish

For laminate top/thermoplastic edge (L)

76	light brown walnut	+$0
8Q	folkstone grey	+$0
91	white	+$0
98	studio white	+$0
CL	cool grey neutral	+$0
LA	light ash	+$0
LBA	clear on ash	+$0
LBR	phantom ecru	+$0
LBS	phantom cocoa	+$0
LBU	medium matte walnut	+$0
LBV	warm grey teak	+$0
LBB	oak on ash	+$0
LBC	walnut on ash	+$0
LBD	dark brown walnut	+$0
LBE	medium red walnut	+$0
LBF	neutral twill	+$0
LBG	sarum twill	+$0
LBH	earthen twill	+$0
LBJ	graphite twill	+$0
LBK	pewter mesh	+$0
LBL	steel mesh	+$0
LBM	crisp linen	+$0
LBN	classic linen	+$0

LBP	casual linen	+$0
LBQ	white twill	+$0
WL	sandstone	+$0
WN	warm grey neutral	+$0
HF	inner tone light	+$0
HM	natural maple	+$0
HP	light anigre	+$0
HT	inner tone A	+$0
HX	aged cherry	+$0
HY	walnut on cherry	+$0
LU	soft white	+$0

Step 8. Leg/Base Finish

Metallic Paint

CN	metallic champagne	+$0
EH	metallic bronze	+$0
MS	metallic silver	+$0

Sand Texture Paint

BK	black	+$0

Smooth Paint

8Q	folkstone grey	+$0
91	white	+$0
98	studio white A	+$0
BU	black umber	+$0
CL	cool grey neutral	+$0
G2	graphite satin	+$0
HF	inner tone light	+$0
LU	soft white	+$0
MT	medium tone	+$0
SG	slate grey	+$0
WL	sandstone	+$0
WN	warm grey neutral	+$0
CD	polished aluminum	+$110

Step 9. Casters/Glides

20	casters	+$0
57	glides	+$0

Oval Table

DT1DE.
DT1DS.
DT1DT.

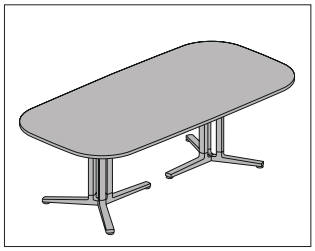

Product Information

Description

This oval table comes in multiple edge styles and has a laminate top with thermoplastic edge, veneer top and edge, or painted top and edge. It has multiple leg/base options, and is available with casters or glides. The caster option has 2 locking and 2 non-locking casters. Glides have 1/2" leveling range. Shipped knocked down.

Notes

When specifying grommets (253, 254, 255), cutouts will be located in the center of table.

Cutouts available for all Connect™ power and data accessories (see Thrive® Portfolio). Cutouts will be located in the center, laterally and front to back.

For additional details on available edge options see Appendices.

For additional size, edge, and finish options, see Vary Easy Program in Appendices.

Dimensions

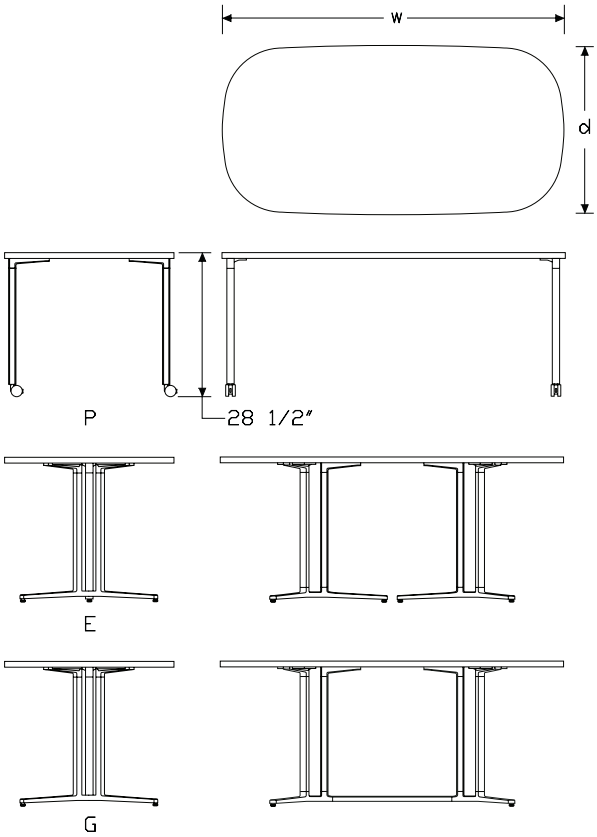

Specification Information

Step 1.

DT1D

Step 2. Edge

S. squared-edge
T. thin-edge
E. eased-edge

Step 3. Depth

30 30″ deep
36 36″ deep
42 42″ deep

Step 4. Width

For 30″ deep (30)

48 48″ wide
60 60″ wide

For 36″ deep (36)

60 60″ wide
72 72″ wide

For 42″ deep (42)

72 72″ wide
84 84″ wide

Step 5. Surface Material

For squared-edge (S.)

L laminate top/thermoplastic edge
W veneer top/veneer edge A
P painted Formcoat® top/edge

For thin-edge (T.)

W veneer top/veneer edge A
P painted Formcoat® top/edge

For eased-edge (E.)

P painted Formcoat® top/edge

Step 6. Leg/Base Type

For 48″ wide (48) or 60″ wide (60)

P post leg
G double 3-column base, spanner

For 72″ wide (72) or 84″ wide (84)

P post leg
E double 3-column base
G double 3-column base, spanner

Prices for Steps 1-6.

		LP	LE	LG	WP	WE	WG
DT1DS. 30	**48**	$980	—	1613	1452	—	2439
	60	$1058	—	1744	1574	—	2639
36	**60**	$1174	—	1936	1756	—	2938
	72	$1350	2292	2226	2028	3491	3389
42	**72**	$1445	2452	2381	2176	3741	3631
	84	$1487	2521	2447	2238	3847	3735

		PP	PE	PG
DT1DS. 30	**48**	$1126	—	1858
	60	$1216	—	2006
36	**60**	$1350	—	2226
	72	$1553	2638	2561
42	**72**	$1662	2821	2738
	84	$1708	2900	2815

		LP	LE	LG	WP	WE	WG
DT1DT. 30	**48**	—	—	—	$1744	—	2925
	60	—	—	—	$1888	—	3165
36	**60**	—	—	—	$2108	—	3525
	72	—	—	—	$2435	4189	4067
42	**72**	—	—	—	$2612	4490	4357
	84	—	—	—	$2684	4618	4482

		PP	PE	PG
DT1DT. 30	**48**	$1200	—	1976
	60	$1296	—	2133
36	**60**	$1438	—	2371
	72	$1653	2808	2726
42	**72**	$1769	3003	2917
	84	$1821	3089	2998

		PP	PE	PG
DT1DE. 30	**48**	$1200	—	1976
	60	$1296	—	2133
36	**60**	$1438	—	2371
	72	$1653	2808	2726
42	**72**	$1769	3003	2917
	84	$1821	3089	2998

Step 7.

Top Finish

For laminate top/thermoplastic edge (L)

28	canyon	+$0
29	misted	+$0
38	twilight	+$0
39	desert	+$0
76	light brown walnut	+$0
8Q	folkstone grey	+$0
91	white	+$0
98	studio white	+$0
CL	cool grey neutral	+$0
HF	inner tone light	+$0
HM	natural maple	+$0
HP	light anigre	+$0
HT	inner tone A	+$0
HX	aged cherry	+$0
HY	walnut on cherry	+$0
LA	light ash	+$0
LBA	clear on ash	+$0
LBB	oak on ash	+$0
LBC	walnut on ash	+$0
LBD	dark brown walnut	+$0
LBE	medium red walnut	+$0
LBF	neutral twill	+$0
LBG	sarum twill	+$0
LBH	earthen twill	+$0
LBJ	graphite twill	+$0
LBM	crisp linen	+$0
LBN	classic linen	+$0
LBP	casual linen	+$0
LBQ	white twill	+$0
LBR	phantom ecru	+$0
LBS	phantom cocoa	+$0
LBU	medium matte walnut	+$0
LBV	warm grey teak	+$0
LT	light tone A	+$0
LU	soft white	+$0
MT	medium tone	+$0
OG	honey maple A	+$0
WL	sandstone	+$0
WN	warm grey neutral	+$0
X1	chalk white A	+$0

Top/Edge Finish: Wood Veneer

For veneer top/veneer edge (W)

2U	light brown walnut A	+$50
40	dark brown walnut A	+$50
ED	aged cherry A	+$50
EK	medium red walnut A	+$50
EW	medium matte walnut A	+$50
ET	clear on ash A	+$50
EU	oak on ash A	+$50
EV	walnut on ash A	+$50
UL	natural maple A	+$50
UX	walnut on cherry A	+$50

Top/Edge Finish: Opaque Formcoat®

For painted Formcoat® top/edge (P)

8Q	folkstone grey	+$0
91	white	+$0
CL	cool grey neutral	+$0
LU	soft white	+$0
WL	sandstone	+$0
WN	warm grey neutral	+$0

Step 8. Edge Finish

For laminate top/thermoplastic edge (L)

28	canyon	+$0
29	misted	+$0
38	twilight	+$0
39	desert	+$0
76	light brown walnut	+$0
8Q	folkstone grey	+$0
8Z	neutral grey	+$0
91	white	+$0
98	studio white	+$0
9V	tapestry beige	+$0
BU	black umber A	+$0
CL	cool grey neutral	+$0
CM	cinnamon	+$0
CO	chamomile	+$0
G2	graphite satin	+$0
HF	inner tone light	+$0
HM	natural maple	+$0
HP	light anigre	+$0
HT	inner tone A	+$0
HX	aged cherry	+$0
HY	walnut on cherry	+$0
JB	millwork cherry	+$0
LA	light ash	+$0

LBA	clear on ash	+$0
LBB	oak on ash	+$0
LBC	walnut on ash	+$0
LBD	dark brown walnut	+$0
LBE	medium red walnut	+$0
LBF	neutral twill	+$0
LBG	sarum twill	+$0
LBH	earthen twill	+$0
LBJ	graphite twill	+$0
LBK	pewter mesh	+$0
LBL	steel mesh	+$0
LBM	crisp linen	+$0
LBN	classic linen	+$0
LBP	casual linen	+$0
LBQ	white twill	+$0
LBR	phantom ecru	+$0
LBS	phantom cocoa	+$0
LBU	medium matte walnut	+$0
LBV	warm grey teak	+$0
LM	mahogany	+$0
LT	light tone A	+$0
LU	soft white	+$0
MT	medium tone	+$0
N3	cool grey	+$0
OG	honey maple A	+$0
SG	slate grey	+$0
WA	wheat	+$0
WL	sandstone	+$0
WN	warm grey neutral	+$0
X1	chalk white A	+$0

Step 9. Leg/Base Finish

Metallic Paint

CN	metallic champagne	+$0
EH	metallic bronze	+$0
MS	metallic silver	+$0

Sand Texture Paint

BK	black	+$0

Smooth Paint

8Q	folkstone grey	+$0
91	white	+$0
98	studio white	+$0
BU	black	+$0
CL	cool grey neutral	+$0
G2	graphite satin	+$0
HF	inner tone light	+$0
LU	soft white	+$0
MT	medium tone	+$0
SG	slate grey	+$0
WL	sandstone	+$0
WN	warm grey neutral	+$0
CD	polished aluminum	+$110

Step 10. Casters/Glides

20	casters	+$0
57	glides	+$0

Step 11. Grommets

NTG	no grommet	+$0
253	cutout for Y1420. or Y1425. - 3 port	+$27
254	cutout for Y1420. or Y1425. - 5 port	+$27
255	cutout for Y1420. or Y1425. - 6 port	+$27

D-Shaped Table

DT1EE.
DT1ES.
DT1ET.

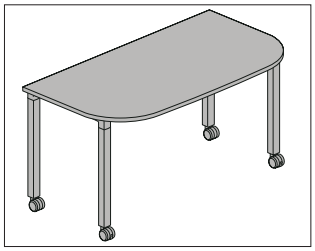

Product Information

Description

This D-shaped table comes in multiple edge styles and has a laminate top with thermoplastic edge, veneer top and edge, or painted top and edge. It has multiple leg options, and is available with casters or glides. The caster option has 2 locking and 2 non-locking casters. Glides have 1/2″ leveling range. Shipped knocked down.

Height-adjustable legs have a 5″ range in 1″ increments.

Notes

Thin edge and eased edge tops available only with 30″ deep surfaces.

T-leg and T-leg with height adjustment cannot be used with 18″ deep tops.

Cable grommet options available through Vary Easy Program for round pass through grommet with 2 1/4″ hole clearance. Holes are located 3″ from rear edge and 6″ from end for the L and R options. Covers not provided with painted surface option.

Cutouts available for all Connect™ power and data accessories (see Thrive® Portfolio). Cutouts will be located in the center, laterally, and approximately 3″ from the rear edge of surface.

Reinforcement channels are used under table tops 54″ and wider. They will be located along the center line for 18″ deep and 24″ deep surfaces, and 19″ from the front edge for 30″ deep surfaces.

For additional details on available edge options see Appendices.

For additional size, edge, and finish options, see Vary Easy Program in Appendices.

UL listed when used with Connect single circuit electrical product (Y137x.) with post leg (P) and T-leg (T) options.

Dimensions

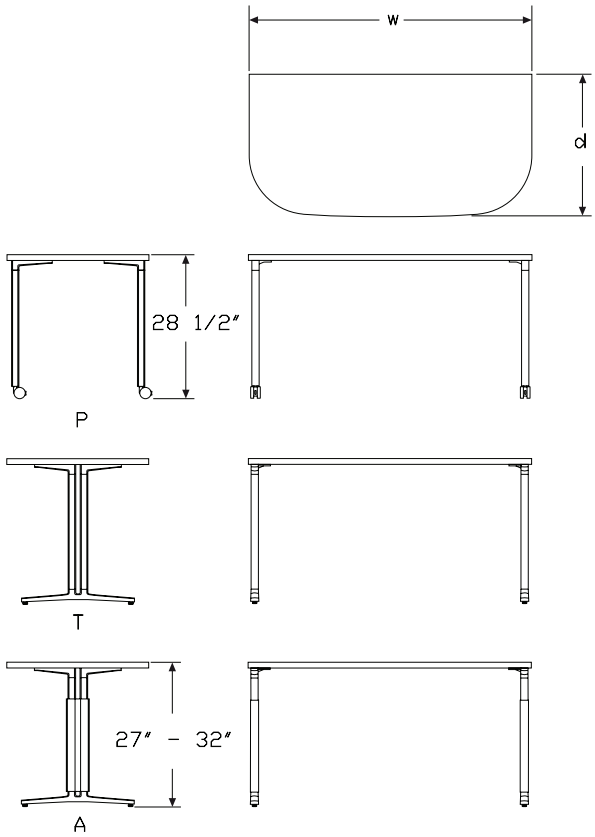

Specification Information

Step 1.

DT1E

Step 2. Edge

S.	squared-edge
T.	thin-edge
E.	eased-edge

Step 3. Depth/Width

For thin-edge (T.) or eased-edge (E.)

3060	30" deep x 60" wide

For squared-edge (S.)

1836	18" deep x 36" wide
2448	24" deep x 48" wide
3060	30" deep x 60" wide

Step 4. Surface Material

For squared-edge (S.)

L	laminate top/thermoplastic edge
W	veneer top/veneer edge A
P	painted Formcoat® top/edge

For thin-edge (T.)

W	veneer top/veneer edge A
P	painted Formcoat® top/edge

For eased-edge (E.)

P	painted Formcoat® top/edge

Step 5. Leg Type

For 18" deep x 36" wide (1836)

P	post leg

For 30" deep x 60" wide (3060) or 24" deep x 48" wide (2448)

P	post leg
T	T-leg
A	T-leg with height adjustment

Prices for Steps 1-5.

			P	T	A
DT1ES.	**1836**	**L**	$764	—	—
		W	$890	—	—
		P	$880	—	—
	2448	**L**	$916	1438	1742
		W	$1080	1619	2057
		P	$1054	1653	2001
	3060	**L**	$1053	1652	2000
		W	$1251	1881	2389
		P	$1211	1900	2299

			P	T	A
DT1ET.	**3060**	**W**	$1499	2258	2867
		P	$1288	2023	2449

			P	T	A
DT1EE.	**3060**	**P**	$1288	2023	2449

Step 6.

Top Finish

For laminate top/thermoplastic edge (L)

28	canyon	+$0
29	misted	+$0
38	twilight	+$0
39	desert	+$0
76	light brown walnut	+$0
91	white	+$0
98	studio white	+$0
8Q	folkstone grey	+$0
CL	cool grey neutral	+$0
HF	inner tone light	+$0
HM	natural maple	+$0
HP	light anigre	+$0
HT	inner tone	+$0
HX	aged cherry	+$0
HY	walnut on cherry	+$0
LA	light ash	+$0
LBA	clear on ash	+$0
LBR	phantom ecru	+$0
LBS	phantom cocoa	+$0
LBU	medium matte walnut	+$0
LBV	warm grey teak	+$0
LBB	oak on ash	+$0
LBC	walnut on ash	+$0
LBD	dark brown walnut	+$0

LBE	medium red walnut	+$0
LBF	neutral twill	+$0
LBG	sarum twill	+$0
LBH	earthen twill	+$0
LBJ	graphite twill	+$0
LBM	crisp linen	+$0
LBN	classic linen	+$0
LBP	casual linen	+$0
LBQ	white twill	+$0
LT	light tone	+$0
LU	soft white	+$0
MT	medium tone	+$0
OG	honey maple	+$0
WL	sandstone	+$0
WN	warm grey neutral	+$0
X1	chalk white	+$0

Top/Edge Finish: Wood Veneer

For veneer top/veneer edge (W)

2U	light brown walnut A	+$50
40	dark brown walnut A	+$50
ED	aged cherry A	+$50
EK	medium red walnut A	+$50
EW	medium matte walnut A	+$50
ET	clear on ash A	+$50
EU	oak on ash A	+$50
EV	walnut on ash A	+$50
UL	natural maple A	+$50
UX	walnut on cherry A	+$50

Top/Edge Finish: Opaque Formcoat®

For painted Formcoat® top/edge (P)

8Q	folkstone grey	+$0
91	white	+$0
CL	cool grey neutral	+$0
LU	soft white	+$0
WL	sandstone	+$0
WN	warm grey neutral	+$0

Step 7. Edge Finish

For laminate top/thermoplastic edge (L)

76	light brown walnut	+$0
8Q	folkstone grey	+$0
91	white	+$0
98	studio white	+$0
CL	cool grey neutral	+$0
LA	light ash	+$0
LBA	clear on ash	+$0
LBR	phantom ecru	+$0
LBS	phantom cocoa	+$0
LBU	medium matte walnut	+$0
LBV	warm grey teak	+$0
LBB	oak on ash	+$0
LBC	walnut on ash	+$0
LBD	dark brown walnut	+$0
LBE	medium red walnut	+$0
LBF	neutral twill	+$0
LBG	sarum twill	+$0
LBH	earthen twill	+$0
LBJ	graphite twill	+$0
LBK	pewter mesh	+$0
LBL	steel mesh	+$0
LBM	crisp linen	+$0
LBN	classic linen	+$0
LBP	casual linen	+$0
LBQ	white twill	+$0
WL	sandstone	+$0
WN	warm grey neutral	+$0
HF	inner tone light	+$0
HM	natural maple	+$0
HP	light anigre	+$0
HT	inner tone	+$0
HX	aged cherry	+$0
HY	walnut on cherry	+$0
LU	soft white	+$0

Step 8. Leg Finish

Metallic Paint

For post leg (P) or T-leg (T)

CN	metallic champagne	+$0
EH	metallic bronze	+$0
MS	metallic silver	+$0

Sand Texture Paint

For post leg (P) or T-leg (T)

BK	black	+$0

Smooth Paint

For post leg (P) or T-leg (T)

8Q	folkstone grey	+$0
91	white	+$0
98	studio white	+$0
BU	black umber	+$0
CL	cool grey neutral	+$0
G2	graphite satin	+$0
HF	inner tone light	+$0
LU	soft white	+$0
MT	medium tone	+$0
SG	slate grey	+$0
WL	sandstone	+$0
WN	warm grey neutral	+$0

For post leg (P) or T-leg (T)

CD	polished aluminum	+$110

Metallic Paint

For T-leg with height adjustment (A)

CN	metallic champagne	+$0
EH	metallic bronze	+$0
MS	metallic silver	+$0

Smooth Paint

For T-leg with height adjustment (A)

8Q	folkstone grey	+$0
91	white	+$0
98	studio white	+$0
BU	black umber	+$0
CL	cool grey neutral	+$0
G2	graphite satin	+$0
HF	inner tone light	+$0
LU	soft white	+$0
MT	medium tone	+$0
SG	slate grey	+$0
WL	sandstone	+$0
WN	warm grey neutral	+$0

For T-leg with height adjustment (A)

CD	polished aluminum	+$110

Step 9. Casters/Glides

20	casters	+$0
57	glides	+$0

Soft Rectangle - Meeting Table

DT1FE.
DT1FS.
DT1FT.

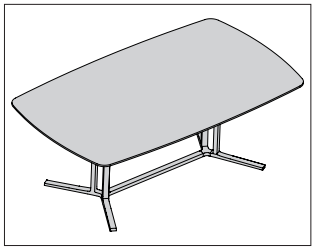

Product Information

Description

This rectangular table comes in multiple edge styles and has a laminate top with thermoplastic edge, veneer top and edge, or painted top and edge. It has multiple leg/base options, and is available with casters or glides. The caster option has 2 locking and 2 non-locking casters. Glides have 1/2" leveling range. Shipped knocked down.

Notes

When specifying grommets (253, 254, 255), cutouts will be located in the center of table.

Cutouts available for all Connect™ power and data accessories (see Thrive® Portfolio). Cutouts will be located in the center, laterally and front to back.

For additional details on available edge options see Appendices.

For additional size, edge, and finish options, see Vary Easy Program in Appendices.

Dimensions

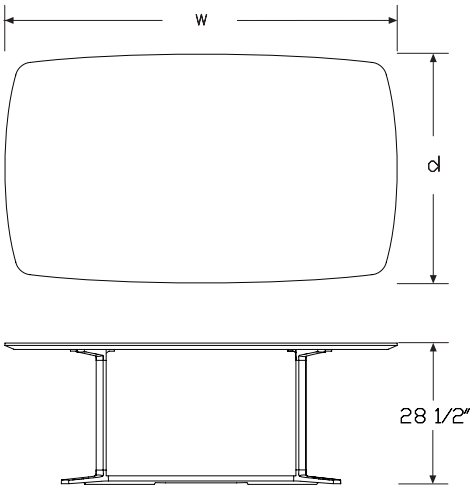

Specification Information

Step 1.

DT1F

Step 2. Edge

S. squared-edge
T. thin-edge
E. eased-edge

Step 3. Depth

30 30" deep
36 36" deep
42 42" deep

Step 4. Width

For 30" deep (30)

48 48" wide
60 60" wide

For 36" deep (36)

60 60" wide
72 72" wide

For 42" deep (42)

72 72" wide
84 84" wide

Step 5. Surface Material

For squared-edge (S.)

L laminate top/thermoplastic edge
W veneer top/veneer edge [A]
P painted Formcoat® top/edge

For thin-edge (T.)

W veneer top/veneer edge [A]
P painted Formcoat® top/edge

For eased-edge (E.)

P painted Formcoat® top/edge

Soft Rectangle - Meeting Table

continued

Step 6. Leg/Base Type

For 48" wide (48) or 60" wide (60)

P	post leg
G	double 3-column base, spanner
T	T-leg
A	T-leg with height adjustment

For 72" wide (72) or 84" wide (84)

P	post leg
E	double 3-column base
G	double 3-column base, spanner

Prices for Steps 1-6.

		LP	LE	LG	LT	LA	WP
DT1FS. 30	**48**	$1126	—	1857	1588	1981	1672
	60	$1216	—	2005	1735	2283	1808
36	**60**	$1350	—	2226	1959	2000	2019
	72	$1553	2638	2560	—	—	2333
42	**84**	$1708	2897	2813	—	—	2572
	72	$1662	2821	2738	—	—	2500

		WE	WG	WT	WA	PP	PE
DT1FS. 30	**48**	—	$2803	2536	2525	1293	—
	60	—	$3034	2765	2915	1398	—
36	**60**	—	$3379	3111	2615	1551	—
	72	$4016	3898	—	—	1785	3032
42	**84**	$4425	4294	—	—	1964	3332
	72	$4301	4175	—	—	1911	3243

		PG	PT	PA
DT1FS. 30	**48**	$2133	1826	2280
	60	$2302	1997	2626
36	**60**	$2560	2251	2299
	72	$2943	—	—
42	**84**	$3235	—	—
	72	$3150	—	—

		LP	LE	LG	LT	LA	WP
DT1FT. 30	**48**	—	—	—	—	—	$2005
	60	—	—	—	—	—	$2172
36	**60**	—	—	—	—	—	$2422
	72	—	—	—	—	—	$2799
42	**84**	—	—	—	—	—	$3088
	72	—	—	—	—	—	$3001

		WE	WG	WT	WA	PP	PE
DT1FT. 30	**48**	—	$3362	3041	3032	1377	—
	60	—	$3639	3317	3498	1489	—
36	**60**	—	$4053	3731	3138	1652	—
	72	$4818	4675	—	—	1902	3229
42	**84**	$5308	5152	—	—	2092	3552
	72	$5160	5009	—	—	2035	3452

		PG	PT	PA
DT1FT. 30	**48**	$2273	2916	3640
	60	$2454	3187	4191
36	**60**	$2725	3595	3674
	72	$3134	—	—
42	**84**	$3447	—	—
	72	$3354	—	—

		WE	WG	WT	WA	PP	PE
DT1FE. 30	**48**	—	—	—	—	$1377	—
	60	—	—	—	—	$1489	—
36	**60**	—	—	—	—	$1652	—
	72	—	—	—	—	$1902	3229
42	**84**	—	—	—	—	$2092	3552
	72	—	—	—	—	$2035	3452

		PG	PT	PA
DT1FE. 30	**48**	$2273	1945	2429
	60	$2454	2126	2795
36	**60**	$2725	2397	2449
	72	$3134	—	—
42	**84**	$3447	—	—
	72	$3354	—	—

Step 7.

Top Finish

For laminate top/thermoplastic edge (L)

28	canyon	+$0
29	misted	+$0
38	twilight	+$0
39	desert	+$0
76	light brown walnut	+$0
91	white	+$0
98	studio white	+$0
8Q	folkstone grey	+$0
CL	cool grey neutral	+$0
HF	inner tone light	+$0
HM	natural maple	+$0

HP	light anigre	+$0
HT	inner tone	+$0
HX	aged cherry	+$0
HY	walnut on cherry	+$0
LA	light ash	+$0
LBA	clear on ash	+$0
LBR	phantom ecru	+$0
LBS	phantom cocoa	+$0
LBU	medium matte walnut	+$0
LBV	warm grey teak	+$0
LBB	oak on ash	+$0
LBC	walnut on ash	+$0
LBD	dark brown walnut	+$0
LBE	medium red walnut	+$0
LBF	neutral twill	+$0
LBG	sarum twill	+$0
LBH	earthen twill	+$0
LBJ	graphite twill	+$0
LBM	crisp linen	+$0
LBN	classic linen	+$0
LBP	casual linen	+$0
LBQ	white twill	+$0
LM	mahogany	+$0
LT	light tone	+$0
LU	soft white	+$0
MT	medium tone	+$0
OG	honey maple	+$0
WL	sandstone	+$0
WN	warm grey neutral	+$0
X1	chalk white	+$0

Top/Edge Finish

For veneer top/veneer edge (W)

2U	light brown walnut A	+$85
40	dark brown walnut A	+$85
ED	aged cherry A	+$85
EK	medium red walnut A	+$85
EW	medium matte walnut A	+$85
ET	clear on ash A	+$85
EU	oak on ash A	+$85
EV	walnut on ash A	+$85
UL	natural maple A	+$85
UX	walnut on cherry A	+$85

Top/Edge Finish: Opaque Formcoat®

For painted Formcoat® top/edge (P)

8Q	folkstone grey	+$0
91	white	+$0
CL	cool grey neutral	+$0
LU	soft white	+$0
WL	sandstone	+$0
WN	warm grey neutral	+$0

Step 8. Edge Finish

For laminate top/thermoplastic edge (L)

76	light brown walnut	+$0
8Q	folkstone grey	+$0
91	white	+$0
98	studio white	+$0
CL	cool grey neutral	+$0
LA	light ash	+$0
LBA	clear on ash	+$0
LBR	phantom ecru	+$0
LBS	phantom cocoa	+$0
LBU	medium matte walnut	+$0
LBV	warm grey teak	+$0
LBB	oak on ash	+$0
LBC	walnut on ash	+$0
LBD	dark brown walnut	+$0
LBE	medium red walnut	+$0
LBF	neutral twill	+$0
LBG	sarum twill	+$0
LBH	earthen twill	+$0
LBJ	graphite twill	+$0
LBK	pewter mesh	+$0
LBL	steel mesh	+$0
LBM	crisp linen	+$0
LBN	classic linen	+$0
LBP	casual linen	+$0
LBQ	white twill	+$0
WL	sandstone	+$0
WN	warm grey neutral	+$0
HF	inner tone light	+$0
HM	natural maple	+$0
HP	light anigre	+$0
HT	inner tone	+$0
HX	aged cherry	+$0
HY	walnut on cherry	+$0
LU	soft white	+$0
X1	chalk white	+$0

Soft Rectangle - Meeting Table

continued

Step 9. Leg/Base Finish

Metallic Paint

For post leg (P), double 3-column base (E), double 3-column base, spanner (G), or T-leg (T)

CN	metallic champagne	+$0
EH	metallic bronze	+$0
MS	metallic silver	+$0

Sand Texture Paint

For post leg (P), double 3-column base (E), double 3-column base, spanner (G), or T-leg (T)

BK	black	+$0

Smooth Paint

For post leg (P), double 3-column base (E), double 3-column base, spanner (G), or T-leg (T)

8Q	folkstone grey	+$0
91	white	+$0
98	studio white	+$0
BU	black umber	+$0
CL	cool grey neutral	+$0
G2	graphite satin	+$0
HF	inner tone light	+$0
LU	soft white	+$0
MT	medium tone	+$0
SG	slate grey	+$0
WL	sandstone	+$0
WN	warm grey neutral	+$0

For post leg (P), double 3-column base (E), double 3-column base, spanner (G), or T-leg (T)

CD	polished aluminum	+$110

Metallic Paint

For T-leg with height adjustment (A)

CN	metallic champagne	+$0
EH	metallic bronze	+$0
MS	metallic silver	+$0

Smooth Paint

For T-leg with height adjustment (A)

8Q	folkstone grey	+$0
91	white	+$0
98	studio white	+$0
BU	black umber	+$0
CL	cool grey neutral	+$0
G2	graphite satin	+$0
HF	inner tone light	+$0
LU	soft white	+$0
MT	medium tone	+$0
SG	slate grey	+$0
WL	sandstone	+$0
WN	warm grey neutral	+$0

For T-leg with height adjustment (A)

CD	polished aluminum	+$110

Step 10. Casters/Glides

20	casters	+$0
57	glides	+$0

Step 11. Grommets

NTG	no grommet	+$0
253	cutout for Y1420. or Y1425. - 3 port	+$27
254	cutout for Y1420. or Y1425. - 5 port	+$27
255	cutout for Y1420. or Y1425. - 6 port	+$27

Video Oval - Meeting Table

DT1GE.
DT1GS.
DT1GT.

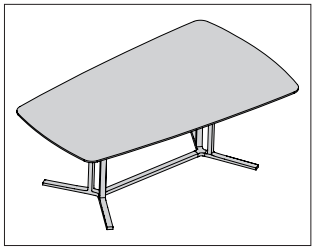

Product Information

Description

This oval table comes in multiple edge styles and has a laminate top with thermoplastic edge, veneer top and edge, or painted top and edge. It has multiple leg/base options, and is available with casters or glides. The caster option has 2 locking and 2 non-locking casters. Glides have 1/2" leveling range. Shipped knocked down.

Notes

When specifying grommets (253, 254, 255), cutouts will be located in the center of table.

Cutouts available for all Connect™ power and data accessories (see Thrive® Portfolio). Cutouts will be located in the center, laterally and front to back.

For optimum viewing, video camera should be placed 42" from large end of table.

For additional details on available edge options see Appendices.

For additional size, edge, and finish options, see Vary Easy Program in Appendices.

Dimensions

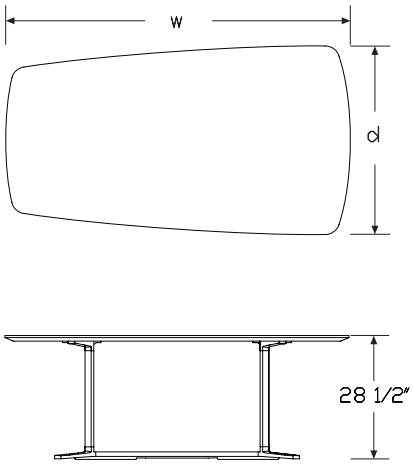

Specification Information

Step 1.

DT1G

Step 2. Edge

S. squared-edge
T. thin-edge
E. eased-edge

Step 3. Depth

42 42" deep

Step 4. Width

72 72" wide
84 84" wide

Step 5. Surface Material

For squared-edge (S.)

L laminate top/thermoplastic edge
W veneer top/veneer edge A
P painted Formcoat® top/edge

For thin-edge (T.)

W veneer top/veneer edge A
P painted Formcoat® top/edge

For eased-edge (E.)

P painted Formcoat® top/edge

Step 6. Leg/Base Type

E double 3-column base
G double 3-column base, spanner

Prices for Steps 1-6.

		LE	LG	WE	WG	PE	PG
DT1GS. 42	**72**	$2821	2738	4301	4175	3243	3150
	84	$2897	2813	4425	4294	3332	3235
DT1GT. 42	**72**	—	—	$5160	5009	3972	3858
	84	—	—	$5308	5152	4081	3962
DT1GE. 42	**72**	—	—	—	—	$3452	3354
	84	—	—	—	—	$3552	3447

Step 7.

Top Finish

For laminate top/thermoplastic edge (L)

28	canyon	+$0
29	misted	+$0
38	twilight	+$0
39	desert	+$0
76	light brown walnut	+$0
91	white	+$0
98	studio white	+$0
8Q	folkstone grey	+$0
CL	cool grey neutral	+$0
HF	inner tone light	+$0
HM	natural maple	+$0
HP	light anigre	+$0
HT	inner tone	+$0
HX	aged cherry	+$0
HY	walnut on cherry	+$0
LA	light ash	+$0
LBA	clear on ash	+$0
LBR	phantom ecru	+$0
LBS	phantom cocoa	+$0
LBU	medium matte walnut	+$0
LBV	warm grey teak	+$0
LBB	oak on ash	+$0
LBC	walnut on ash	+$0
LBD	dark brown walnut	+$0
LBE	medium red walnut	+$0
LBF	neutral twill	+$0
LBG	sarum twill	+$0
LBH	earthen twill	+$0
LBJ	graphite twill	+$0
LBM	crisp linen	+$0
LBN	classic linen	+$0
LBP	casual linen	+$0
LBQ	white twill	+$0
LT	light tone	+$0
LU	soft white	+$0
MT	medium tone	+$0
OG	honey maple	+$0
WL	sandstone	+$0
WN	warm grey neutral	+$0
X1	chalk white	+$0

Top/Edge Finish

For veneer top/veneer edge (W)

2U	light brown walnut A	+$85
40	dark brown walnut A	+$85
ED	aged cherry A	+$85
EK	medium red walnut A	+$85
EW	medium matte walnut A	+$85
ET	clear on ash A	+$85
EU	oak on ash A	+$85
EV	walnut on ash A	+$85
UL	natural maple A	+$85
UX	walnut on cherry A	+$85

Top/Edge Finish: Opaque Formcoat®

For painted Formcoat® top/edge (P)

8Q	folkstone grey	+$0
91	white	+$0
CL	cool grey neutral	+$0
LU	soft white	+$0
WL	sandstone	+$0
WN	warm grey neutral	+$0

Step 8. Edge Finish

For laminate top/thermoplastic edge (L)

76	light brown walnut	+$0
8Q	folkstone grey	+$0
91	white	+$0
98	studio white	+$0
CL	cool grey neutral	+$0
LA	light ash	+$0
LBA	clear on ash	+$0
LBR	phantom ecru	+$0
LBS	phantom cocoa	+$0
LBU	medium matte walnut	+$0
LBV	warm grey teak	+$0
LBB	oak on ash	+$0
LBC	walnut on ash	+$0
LBD	dark brown walnut	+$0
LBE	medium red walnut	+$0
LBF	neutral twill	+$0
LBG	sarum twill	+$0
LBH	earthen twill	+$0
LBJ	graphite twill	+$0
LBK	pewter mesh	+$0
LBL	steel mesh	+$0
LBM	crisp linen	+$0
LBN	classic linen	+$0

LBP	casual linen	+$0
LBQ	white twill	+$0
WL	sandstone	+$0
WN	warm grey neutral	+$0
HF	inner tone light	+$0
HM	natural maple	+$0
HP	light anigre	+$0
HT	inner tone	+$0
HX	aged cherry	+$0
HY	walnut on cherry	+$0
LU	soft white	+$0

Step 9. Leg/Base Finish

Metallic Paint

CN	metallic champagne	+$0
EH	metallic bronze	+$0
MS	metallic silver	+$0

Sand Texture Paint

BK	black	+$0

Smooth Paint

8Q	folkstone grey	+$0
91	white	+$0
98	studio white	+$0
BU	black umber	+$0
CL	cool grey neutral	+$0
G2	graphite satin	+$0
HF	inner tone light	+$0
LU	soft white	+$0
MT	medium tone	+$0
SG	slate grey	+$0
WL	sandstone	+$0
WN	warm grey neutral	+$0
CD	polished aluminum	+$110

Step 10. Casters/Glides

20	casters	+$0
57	glides	+$0

Step 11. Grommets

NTG	no grommet	+$0
253	cutout for Y1420. or Y1425. - 3 port	+$27
254	cutout for Y1420. or Y1425. - 5 port	+$27
255	cutout for Y1420. or Y1425. - 6 port	+$27

Concave Rectangle

DT1HE.
DT1HS.
DT1HT.

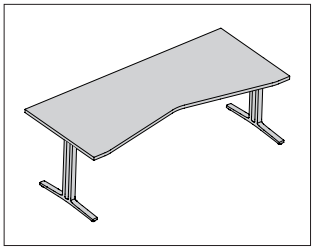

Product Information

Description

This rectangular table comes in multiple edge styles and has a laminate top with thermoplastic edge, veneer top and edge, or painted top and edge. It has multiple leg options, and is available with casters or glides. The caster option has 2 locking and 2 non-locking casters. Glides have 1/2" leveling range. Shipped knocked down.

Height-adjustable legs have a 5" range in 1" increments.

Notes

When specifying grommets (253, 254, 255), cutouts will be located in the center of table.

Cutouts available for all Connect™ power and data accessories (see Thrive® Portfolio). Cutouts will be located in the center, laterally, and approximately 3" from the rear edge of surface.

Reinforcement channels are used under table tops 54" and wider. They will be located along the center line for 18" deep and 24" deep surfaces, and 19" from the front edge for 30" deep surfaces.

For additional details on available edge options see Appendices.

For additional size, edge, finish, and cable management options, see Vary Easy Program in Appendices.

UL listed when used with Connect single circuit electrical product (Y137x.) with post leg (P), T-leg (T) and C-leg (C) options.

Dimensions

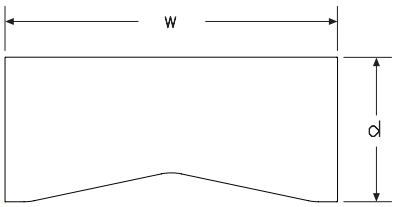

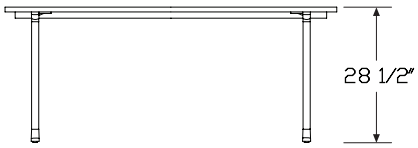

Specification Information

Step 1.

DT1H

Step 2. Edge

S. squared-edge
T. thin-edge
E. eased-edge

Step 3. Depth

30 30" deep
36 36" deep

Step 4. Width

60 60" wide
66 66" wide
72 72" wide

Step 5. Surface Material

For squared-edge (S.)

L laminate top/thermoplastic edge
W veneer top/veneer edge [A]
P painted Formcoat® top/edge

For thin-edge (T.)

W veneer top/veneer edge [A]
P painted Formcoat® top/edge

For eased-edge (E.)

P painted Formcoat® top/edge

Step 6. Leg Type

For 30" deep (30)

P post leg
T T-leg
A T-leg with height adjustment
C C-leg
D D-leg

For 36" deep (36)

P post leg
T T-leg
A T-leg with height adjustment

Prices for Steps 1-6.

		LP	LT	LA	LC	LD	WP
DT1HS. 30	**60**	$1281	1664	2077	1664	2077	1583
	66	$1373	1784	2227	1784	2227	1704
	72	$1464	1903	2378	1903	2378	1824
36	**60**	$1358	1724	2095	—	—	1643
	66	$1430	1817	2291	—	—	1762
	72	$1501	1911	2488	—	—	1882

		WT	WA	WC	WD	PP	PT
DT1HS. 30	**60**	$2081	2620	2081	2620	1473	1912
	66	$2237	2815	2237	2815	1578	2050
	72	$2392	3010	2392	3010	1684	2189
36	**60**	$2139	2680	—	—	1563	1981
	66	$2296	2875	—	—	1645	2090
	72	$2450	3071	—	—	1727	2196

		PA	PC	PD
DT1HS. 30	**60**	$2389	1912	2389
	66	$2562	2050	2562
	72	$2733	2189	2733
36	**60**	$2409	—	—
	66	$2634	—	—
	72	$2862	—	—

		LP	LT	LA	LC	LD	WP
DT1HT. 30	**60**	—	—	—	—	—	$1899
	66	—	—	—	—	—	$2042
	72	—	—	—	—	—	$2189
36	**60**	—	—	—	—	—	$1970
	66	—	—	—	—	—	$2115
	72	—	—	—	—	—	$2260

		WT	WA	WC	WD	PP	PT
DT1HT. 30	**60**	$2495	3146	2495	3146	1569	2037
	66	$2682	3379	2682	3379	1681	2183
	72	$2870	3612	2870	3612	1795	2331
36	**60**	$2567	3217	—	—	1662	2112
	66	$2754	3449	—	—	1752	2225
	72	$2942	3683	—	—	1839	2339

		PA	PC	PD
DT1HT. 30	**60**	$2546	2037	2546
	66	$2727	2183	2727
	72	$2911	2331	2911
36	**60**	$2566	—	—
	66	$2805	—	—
	72	$3046	—	—

		WT	WA	WC	WD	PP	PT
DT1HE. 30	**60**	—	—	—	—	$1569	2037
	66	—	—	—	—	$1681	2183
	72	—	—	—	—	$1795	2331
36	**60**	—	—	—	—	$1662	2112
	66	—	—	—	—	$1752	2225
	72	—	—	—	—	$1839	2339

		PA	PC	PD
DT1HE. 30	**60**	$2546	2037	2546
	66	$2727	2183	2727
	72	$2911	2331	2911
36	**60**	$2566	—	—
	66	$2805	—	—
	72	$3046	—	—

Step 7.

Top Finish

For laminate top/thermoplastic edge (L)

28	canyon	+$0
29	misted	+$0
38	twilight	+$0
39	desert	+$0
76	light brown walnut	+$0
91	white	+$0
98	studio white	+$0
8Q	folkstone grey	+$0
CL	cool grey neutral	+$0
HF	inner tone light	+$0
HM	natural maple	+$0
HP	light anigre	+$0
HT	inner tone	+$0
HX	aged cherry	+$0
HY	walnut on cherry	+$0
LA	light ash	+$0
LBA	clear on ash	+$0
LBR	phantom ecru	+$0
LBS	phantom cocoa	+$0
LBU	medium matte walnut	+$0
LBV	warm grey teak	+$0
LBB	oak on ash	+$0
LBC	walnut on ash	+$0

LBD	dark brown walnut	+$0
LBE	medium red walnut	+$0
LBF	neutral twill	+$0
LBG	sarum twill	+$0
LBH	earthen twill	+$0
LBJ	graphite twill	+$0
LBM	crisp linen	+$0
LBN	classic linen	+$0
LBP	casual linen	+$0
LBQ	white twill	+$0
LT	light tone	+$0
LU	soft white	+$0
MT	medium tone	+$0
OG	honey maple	+$0
WL	sandstone	+$0
WN	warm grey neutral	+$0
X1	chalk white	+$0

Top/Edge Finish: Wood Veneer

For veneer top/veneer edge (W)

2U	light brown walnut A	+$85
40	dark brown walnut A	+$85
ED	aged cherry A	+$85
EK	medium red walnut A	+$85
EW	medium matte walnut A	+$85
ET	clear on ash	+$85
EU	oak on ash	+$85
EV	walnut on ash	+$85
UL	natural maple A	+$85
UX	walnut on cherry A	+$85

Top/Edge Finish: Opaque Formcoat®

For painted Formcoat® top/edge (P)

8Q	folkstone grey	+$0
91	white	+$0
CL	cool grey neutral	+$0
LU	soft white	+$0
WL	sandstone	+$0
WN	warm grey neutral	+$0

Step 8. Edge Finish

For laminate top/thermoplastic edge (L)

76	light brown walnut	+$0
8Q	folkstone grey	+$0
91	white	+$0
98	studio white	+$0
CL	cool grey neutral	+$0
LA	light ash	+$0
LBA	clear on ash	+$0
LBR	phantom ecru	+$0
LBS	phantom cocoa	+$0
LBU	medium matte walnut	+$0
LBV	warm grey teak	+$0
LBB	oak on ash	+$0
LBC	walnut on ash	+$0
LBD	dark brown walnut	+$0
LBE	medium red walnut	+$0
LBF	neutral twill	+$0
LBG	sarum twill	+$0
LBH	earthen twill	+$0
LBJ	graphite twill	+$0
LBK	pewter mesh	+$0
LBL	steel mesh	+$0
LBM	crisp linen	+$0
LBN	classic linen	+$0
LBP	casual linen	+$0
LBQ	white twill	+$0
WL	sandstone	+$0
WN	warm grey neutral	+$0
HF	inner tone light	+$0
HM	natural maple	+$0
HP	light anigre	+$0
HT	inner tone	+$0
HX	aged cherry	+$0
HY	walnut on cherry	+$0
LU	soft white	+$0

Step 9. Leg Finish

Metallic Paint

For post leg (P), T-leg (T), C-leg (C), or D-leg (D)

CN	metallic champagne	+$0
EH	metallic bronze	+$0
MS	metallic silver	+$0

Sand Texture Paint

For post leg (P), T-leg (T), C-leg (C), or D-leg (D)

BK	black	+$0

Smooth Paint		
For post leg (P), T-leg (T), C-leg (C), or D-leg (D)		
8Q	folkstone grey	+$0
91	white	+$0
98	studio white	+$0
BU	black umber	+$0
CL	cool grey neutral	+$0
G2	graphite satin	+$0
HF	inner tone light	+$0
LU	soft white	+$0
MT	medium tone	+$0
SG	slate grey	+$0
WL	sandstone	+$0
WN	warm grey neutral	+$0

For post leg (P), T-leg (T), C-leg (C), or D-leg (D)		
CD	polished aluminum	+$110

Metallic Paint		
For T-leg with height adjustment (A)		
CN	metallic champagne	+$0
EH	metallic bronze	+$0
MS	metallic silver	+$0

Smooth Paint		
For T-leg with height adjustment (A)		
8Q	folkstone grey	+$0
91	white	+$0
98	studio white	+$0
BU	black umber	+$0
CL	cool grey neutral	+$0
G2	graphite satin	+$0
HF	inner tone light	+$0
LU	soft white	+$0
MT	medium tone	+$0
SG	slate grey	+$0
WL	sandstone	+$0
WN	warm grey neutral	+$0

For T-leg with height adjustment (A)		
CD	polished aluminum	+$110

Step 10. Casters/Glides		
20	casters	+$0
57	glides	+$0

Step 11. Grommets		
NTG	no grommet	+$0
253	cutout for Y1420. or Y1425. - 3 port	+$27
254	cutout for Y1420. or Y1425. - 5 port	+$27
255	cutout for Y1420. or Y1425. - 6 port	+$27

Soft Square Table

DT1JE.
DT1JS.
DT1JT.

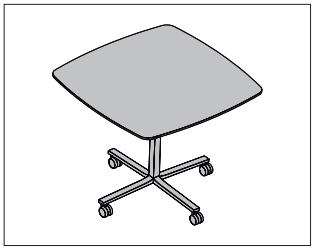

Product Information

Description

This square table comes in multiple edge styles and has a laminate top with thermoplastic edge, veneer top and edge, or painted top and edge. It has multiple leg/base options, and is available with casters or glides. The caster option has 2 locking and 2 non-locking casters. Glides have 1/2" leveling range. Shipped knocked down.

Notes

48" tops available only with post leg option for optimum stability.

For additional details on available edge options see Appendices.

For additional size, edge, and finish options, see Vary Easy Program in Appendices.

UL listed when used with Connect™ single circuit electrical product (Y137x.) with post leg (P) option.

Dimensions

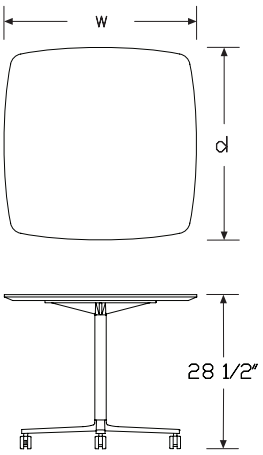

Specification Information

Step 1.

DT1J

Step 2. Edge

S. squared-edge
T. thin-edge
E. eased-edge

Step 3. Depth/Width

3030 30" deep x 30" wide
3636 36" deep x 36" wide
4242 42" deep x 42" wide
4848 48" deep x 48" wide

Step 4. Surface Material

For squared-edge (S.)

L laminate top/thermoplastic edge
W veneer top/veneer edge [A]
P painted Formcoat® top/edge

For thin-edge (T.)

W veneer top/veneer edge [A]
P painted Formcoat® top/edge

For eased-edge (E.)

P painted Formcoat® top/edge

Step 5. Leg/Base Type

For 30" deep x 30" wide (3030) or 36" deep x 36" wide (3636)

P post leg
S single-column base [A]

For 42" deep x 42" wide (4242)

P post leg

For 48" deep x 48" wide (4848)

P post leg

Prices for Steps 1-5.

			P	S
DT1JS.	**3030**	**L**	$858	947
		W	$1086	1205
		P	$986	1090

	3636	**L**	$1030	1137
		W	$1316	1460
		P	$1183	1306
	4242	**L**	$1181	—
		W	$1523	—
		P	$1360	—
	4848	**L**	$1325	—
		W	$1785	—
		P	$1523	—

			P	**S**
DT1JT.	**3030**	**W**	$1301	1445
		P	$1051	1162
	3636	**W**	$1578	1753
		P	$1261	1392
	4242	**W**	$1826	—
		P	$1447	—
	4848	**W**	$2140	—
		P	$1621	—

			P	**S**
DT1JE.	**3030**	**P**	$1051	1162
	3636	**P**	$1261	1392
	4242	**P**	$1447	—
	4848	**P**	$1621	—

Step 6.

Top Finish

For laminate top/thermoplastic edge (L)

28	canyon	+$0
29	misted	+$0
38	twilight	+$0
39	desert	+$0
76	light brown walnut	+$0
91	white	+$0
98	studio white	+$0
8Q	folkstone grey	+$0
CL	cool grey neutral	+$0
HF	inner tone light	+$0
HM	natural maple	+$0
HP	light anigre	+$0
HT	inner tone	+$0
HX	aged cherry	+$0
HY	walnut on cherry	+$0
LA	light ash	+$0
LBA	clear on ash	+$0
LBR	phantom ecru	+$0
LBS	phantom cocoa	+$0
LBU	medium matte walnut	+$0
LBV	warm grey teak	+$0
LBB	oak on ash	+$0
LBC	walnut on ash	+$0
LBD	dark brown walnut	+$0
LBE	medium red walnut	+$0
LBF	neutral twill	+$0
LBG	sarum twill	+$0
LBH	earthen twill	+$0
LBJ	graphite twill	+$0
LBM	crisp linen	+$0
LBN	classic linen	+$0
LBP	casual linen	+$0
LBQ	white twill	+$0
LT	light tone	+$0
LU	soft white	+$0
MT	medium tone	+$0
OG	honey maple	+$0
WL	sandstone	+$0
WN	warm grey neutral	+$0
X1	chalk white	+$0

Top/Edge Finish: Wood Veneer

For veneer top/veneer edge (W)

2U	light brown walnut	+$85
40	dark brown walnut	+$85
ED	aged cherry	+$85
EK	medium red walnut	+$85
EW	medium matte walnut	+$85
ET	clear on ash	+$85
EU	oak on ash	+$85
EV	walnut on ash	+$85
UL	natural maple	+$85
UX	walnut on cherry	+$85

Top/Edge Finish: Opaque Formcoat®

For painted Formcoat® top/edge (P)

8Q	folkstone grey	+$0
91	white	+$0
CL	cool grey neutral	+$0
LU	soft white	+$0
WL	sandstone	+$0
WN	warm grey neutral	+$0

Step 7. Edge Finish		
For laminate top/thermoplastic edge (L)		
76	light brown walnut	+$0
8Q	folkstone grey	+$0
91	white	+$0
98	studio white	+$0
CL	cool grey neutral	+$0
LA	light ash	+$0
LBA	clear on ash	+$0
LBR	phantom ecru	+$0
LBS	phantom cocoa	+$0
LBU	medium matte walnut	+$0
LBV	warm grey teak	+$0
LBB	oak on ash	+$0
LBC	walnut on ash	+$0
LBD	dark brown walnut	+$0
LBE	medium red walnut	+$0
LBF	neutral twill	+$0
LBG	sarum twill	+$0
LBH	earthen twill	+$0
LBJ	graphite twill	+$0
LBK	pewter mesh	+$0
LBL	steel mesh	+$0
LBM	crisp linen	+$0
LBN	classic linen	+$0
LBP	casual linen	+$0
LBQ	white twill	+$0
WL	sandstone	+$0
WN	warm grey neutral	+$0
HF	inner tone light	+$0
HM	natural maple	+$0
HP	light anigre	+$0
HT	inner tone	+$0
HX	aged cherry	+$0
HY	walnut on cherry	+$0
LU	soft white	+$0

Step 8. Leg Finish		
Metallic Paint		
CN	metallic champagne	+$0
EH	metallic bronze	+$0
MS	metallic silver	+$0
Sand Texture Paint		
BK	black	+$0
Smooth Paint		
8Q	folkstone grey	+$0
91	white	+$0
98	studio white	+$0
BU	black umber	+$0
CL	cool grey neutral	+$0
G2	graphite satin	+$0
HF	inner tone light	+$0
LU	soft white	+$0
MT	medium tone	+$0
SG	slate grey	+$0
WL	sandstone	+$0
WN	warm grey neutral	+$0
CD	polished aluminum	+$110

Step 9. Casters/Glides		
20	casters	+$0
57	glides	+$0

Tear Drop Table

DT1KE.
DT1KS.
DT1KT.

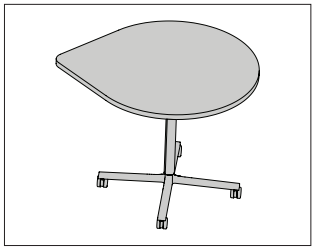

Product Information

Description

This tear drop table comes in multiple edge styles and has a laminate top with thermoplastic edge, veneer top and edge, or painted top and edge. It has multiple leg/base options, and is available with casters or glides. The caster option has 2 locking and 2 non-locking casters. Glides have 1/2" leveling range. Shipped knocked down.

Notes

For additional details on available edge options see Appendices.

For additional size, edge, and finish options, see Vary Easy Program in Appendices.

Dimensions

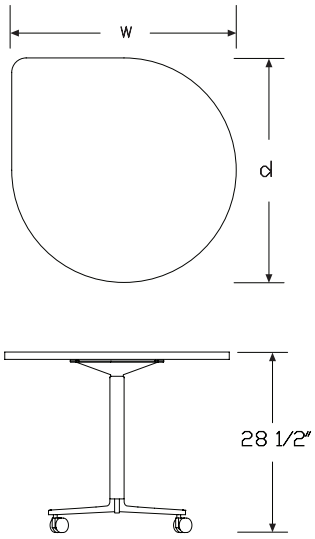

Specification Information

Step 1.

DT1K A

Step 2. Edge

S. squared-edge
T. thin-edge
E. eased-edge

Step 3. Diameter

30 30" diameter
36 36" diameter

Step 4. Surface Material

For eased-edge (E.)

P painted Formcoat® top/edge

For thin-edge (T.)

W veneer top/veneer edge
P painted Formcoat® top/edge

For squared-edge (S.)

L laminate top/thermoplastic edge
W veneer top/veneer edge
P painted Formcoat® top/edge

Step 5. Leg/Base Type

S single-column base A

Prices for Steps 1-5.

			S
DT1KS.	**30**	**L**	$972
		W	$1231
		P	$1116
	36	**L**	$1112
		W	$1495
		P	$1279

			S
DT1KT.	**30**	**W**	$1481
		P	$1189
	36	**W**	$1794
		P	$1362

			S
DT1KE.	**30**	**P**	$1189

36 P		$1362

Step 6.

Top Finish

For laminate top/thermoplastic edge (L)

28	canyon	+$0
29	misted	+$0
38	twilight	+$0
39	desert	+$0
76	light brown walnut	+$0
91	white	+$0
98	studio white	+$0
8Q	folkstone grey	+$0
CL	cool grey neutral	+$0
HF	inner tone light	+$0
HM	natural maple	+$0
HP	light anigre	+$0
HT	inner tone	+$0
HX	aged cherry	+$0
HY	walnut on cherry	+$0
LA	light ash	+$0
LBA	clear on ash	+$0
LBR	phantom ecru	+$0
LBS	phantom cocoa	+$0
LBU	medium matte walnut	+$0
LBV	warm grey teak	+$0
LBB	oak on ash	+$0
LBC	walnut on ash	+$0
LBD	dark brown walnut	+$0
LBE	medium red walnut	+$0
LBF	neutral twill	+$0
LBG	sarum twill	+$0
LBH	earthen twill	+$0
LBJ	graphite twill	+$0
LBM	crisp linen	+$0
LBN	classic linen	+$0
LBP	casual linen	+$0
LBQ	white twill	+$0
LT	light tone	+$0
LU	soft white	+$0
MT	medium tone	+$0
OG	honey maple	+$0
WL	sandstone	+$0
WN	warm grey neutral	+$0
X1	chalk white	+$0

Top/Edge Finish: Opaque Formcoat®

For painted Formcoat® top/edge (P)

8Q	folkstone grey	+$0
91	white	+$0
CL	cool grey neutral	+$0
LU	soft white	+$0
WL	sandstone	+$0
WN	warm grey neutral	+$0

Top/Edge Finish: Wood Veneer

For veneer top/veneer edge (W)

2U	light brown walnut A	+$85
40	dark brown walnut A	+$85
ED	aged cherry A	+$85
EK	medium red walnut A	+$85
EW	medium matte walnut A	+$85
ET	clear on ash	+$85
EU	oak on ash	+$85
EV	walnut on ash	+$85
EY	light anigre A	+$85
UL	natural maple A	+$85
UX	walnut on cherry A	+$85

Step 7. Edge Finish

For laminate top/thermoplastic edge (L)

76	light brown walnut	+$0
8Q	folkstone grey	+$0
91	white	+$0
98	studio white	+$0
CL	cool grey neutral	+$0
LA	light ash	+$0
LBA	clear on ash	+$0
LBR	phantom ecru	+$0
LBS	phantom cocoa	+$0
LBU	medium matte walnut	+$0
LBV	warm grey teak	+$0
LBB	oak on ash	+$0
LBC	walnut on ash	+$0
LBD	dark brown walnut	+$0
LBE	medium red walnut	+$0
LBF	neutral twill	+$0
LBG	sarum twill	+$0
LBH	earthen twill	+$0
LBJ	graphite twill	+$0
LBK	pewter mesh	+$0
LBL	steel mesh	+$0
LBM	crisp linen	+$0

LBN	classic linen	+$0
LBP	casual linen	+$0
LBQ	white twill	+$0
WL	sandstone	+$0
WN	warm grey neutral	+$0
HF	inner tone light	+$0
HM	natural maple	+$0
HP	light anigre	+$0
HT	inner tone	+$0
HX	aged cherry	+$0
HY	walnut on cherry	+$0
LU	soft white	+$0

Step 8. Leg/Base Finish

Metallic Paint

CN	metallic champagne	+$0
EH	metallic bronze	+$0
MS	metallic silver	+$0

Sand Texture Paint

BK	black	+$0

Smooth Paint

8Q	folkstone grey	+$0
91	white	+$0
98	studio white	+$0
BU	black umber	+$0
CL	cool grey neutral	+$0
G2	graphite satin	+$0
HF	inner tone light	+$0
LU	soft white	+$0
MT	medium tone	+$0
SG	slate grey	+$0
WL	sandstone	+$0
WN	warm grey neutral	+$0
CD	polished aluminum	+$110

Step 9. Casters/Glides

20	casters	+$0
57	glides	+$0

Classroom Curve Table

DT1LE.
DT1LS.
DT1LT.

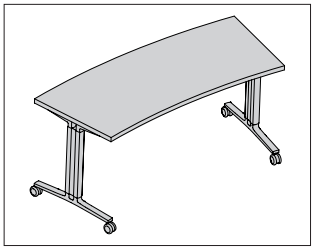

Product Information

Description

This classroom table comes in multiple edge styles and has a laminate top with thermoplastic edge, veneer top and edge, or painted top and edge. It has multiple leg options, and is available with casters or glides. The caster option has 2 locking and 2 non-locking casters. Glides have 1/2" leveling range. Shipped knocked down.

Height-adjustable legs have a 5" range in 1" increments.

Notes

Cable grommet options available through Vary Easy Program for round pass through grommet with 2 1/4" hole clearance. Holes are located 3" from rear edge and 6" from end for the L and R options. Covers not provided with painted surface option.

Reinforcement channels are used under table tops 54" and wider. They will be located along the center line for 18" deep and 24" deep surfaces, and 19" from the front edge for 30" deep surfaces.

For additional details on available edge options see Appendices.

For additional size, edge, finish, and cable management options, see Vary Easy Program in Appendices.

UL listed when used with Connect™ single circuit electrical product (Y137x.) with post leg (P) and T-leg (T) options.

Dimensions

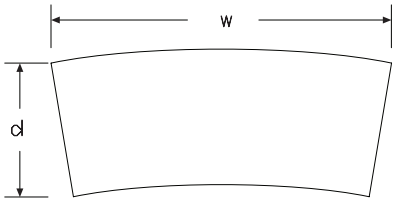

Specification Information

Step 1.

DT1L

Step 2. Edge

S. squared-edge
T. thin-edge
E. eased-edge

Step 3. Depth

For squared-edge (S.)

18 18" deep
24 24" deep

For thin-edge (T.)

24 24" deep

For eased-edge (E.)

24 24" deep

Step 4. Width

For 18" deep (18)

60 60" wide

For 24" deep (24)

48 48" wide
60 60" wide

Step 5. Surface Material

For squared-edge (S.)

L laminate top/thermoplastic edge
W veneer top/veneer edge [A]
P painted Formcoat® top/edge

For thin-edge (T.)

W veneer top/veneer edge [A]
P painted Formcoat® top/edge

For eased-edge (E.)

P painted Formcoat® top/edge

Step 6. Leg Type

For 18" deep (18)

P	post leg

For 24" deep (24)

P	post leg
T	T-leg
A	T-leg with height adjustment

Prices for Steps 1-6.

			LP	LT	LA	WP	WT	WA
DT1LS.	**18**	**60**	$1094	—	—	1341	—	—
	24	**48**	$1095	1422	1780	1343	1769	2230
		60	$1230	1600	1998	1520	1998	2518

			PP	PT	PA
DT1LS.	**18**	**60**	$1258	—	—
	24	**48**	$1259	1637	2046
		60	$1416	1839	2296

			LP	LT	LA	WP	WT	WA
DT1LT.	**24**	**48**	—	—	—	$1612	2124	2675
		60	—	—	—	$1823	2396	3020

			PP	PT	PA
DT1LT.	**24**	**48**	$1340	1744	2178
		60	$1508	1959	2446

			PP	PT	PA
DT1LE.	**24**	**48**	$1340	1744	2178
		60	$1508	1959	2446

Step 7.

Top Finish

For laminate top/thermoplastic edge (L)

28	canyon	+$0
29	misted	+$0
38	twilight	+$0
39	desert	+$0
76	light brown walnut	+$0
91	white	+$0
98	studio white	+$0
8Q	folkstone grey	+$0
CL	cool grey neutral	+$0
HF	inner tone light	+$0
HM	natural maple	+$0
HP	light anigre	+$0
HT	inner tone	+$0
HX	aged cherry	+$0
HY	walnut on cherry	+$0
LA	light ash	+$0
LBA	clear on ash	+$0
LBR	phantom ecru	+$0
LBS	phantom cocoa	+$0
LBU	medium matte walnut	+$0
LBV	warm grey teak	+$0
LBB	oak on ash	+$0
LBC	walnut on ash	+$0
LBD	dark brown walnut	+$0
LBE	medium red walnut	+$0
LBF	neutral twill	+$0
LBG	sarum twill	+$0
LBH	earthen twill	+$0
LBJ	graphite twill	+$0
LBM	crisp linen	+$0
LBN	classic linen	+$0
LBP	casual linen	+$0
LBQ	white twill	+$0
LT	light tone	+$0
LU	soft white	+$0
MT	medium tone	+$0
OG	honey maple	+$0
WL	sandstone	+$0
WN	warm grey neutral	+$0
X1	chalk white	+$0

Top/Edge Finish: Wood Veneer

For veneer top/veneer edge (W)

2U	light brown walnut A	+$85
40	dark brown walnut A	+$85
ED	aged cherry A	+$85
EK	medium red walnut A	+$85
EW	medium matte walnut A	+$85
ET	clear on ash A	+$85
EU	oak on ash A	+$85
EV	walnut on ash A	+$85
UL	natural maple A	+$85
UX	walnut on cherry A	+$85

Top/Edge Finish: Opaque Formcoat®

For painted Formcoat® top/edge (P)

8Q	folkstone grey	+$0
91	white	+$0
CL	cool grey neutral	+$0
LU	soft white	+$0
WL	sandstone	+$0
WN	warm grey neutral	+$0

Step 8. Edge Finish

For laminate top/thermoplastic edge (L)

76	light brown walnut	+$0
8Q	folkstone grey	+$0
91	white	+$0
98	studio white	+$0
CL	cool grey neutral	+$0
LA	light ash	+$0
LBA	clear on ash	+$0
LBR	phantom ecru	+$0
LBS	phantom cocoa	+$0
LBU	medium matte walnut	+$0
LBV	warm grey teak	+$0
LBB	oak on ash	+$0
LBC	walnut on ash	+$0
LBD	dark brown walnut	+$0
LBE	medium red walnut	+$0
LBF	neutral twill	+$0
LBG	sarum twill	+$0
LBH	earthen twill	+$0
LBJ	graphite twill	+$0
LBK	pewter mesh	+$0
LBL	steel mesh	+$0
LBM	crisp linen	+$0
LBN	classic linen	+$0
LBP	casual linen	+$0
LBQ	white twill	+$0
WL	sandstone	+$0
WN	warm grey neutral	+$0
HF	inner tone light	+$0
HM	natural maple	+$0
HP	light anigre	+$0
HT	inner tone	+$0
HX	aged cherry	+$0
HY	walnut on cherry	+$0
LU	soft white	+$0

Step 9. Leg Finish

Metallic Paint

For post leg (P) or T-leg (T)

CN	metallic champagne	+$0
EH	metallic bronze	+$0
MS	metallic silver	+$0

Sand Texture Paint

For post leg (P) or T-leg (T)

BK	black	+$0

Smooth Paint

For post leg (P) or T-leg (T)

8Q	folkstone grey	+$0
91	white	+$0
98	studio white	+$0
BU	black umber	+$0
CL	cool grey neutral	+$0
G2	graphite satin	+$0
HF	inner tone light	+$0
LU	soft white	+$0
MT	medium tone	+$0
SG	slate grey	+$0
WL	sandstone	+$0
WN	warm grey neutral	+$0

For post leg (P) or T-leg (T)

CD	polished aluminum	+$110

Metallic Paint

For T-leg with height adjustment (A)

CN	metallic champagne	+$0
EH	metallic bronze	+$0
MS	metallic silver	+$0

Smooth Paint		
For T-leg with height adjustment (A)		
8Q	folkstone grey	+$0
91	white	+$0
98	studio white	+$0
BU	black umber	+$0
CL	cool grey neutral	+$0
G2	graphite satin	+$0
HF	inner tone light	+$0
LU	soft white	+$0
MT	medium tone	+$0
SG	slate grey	+$0
WL	sandstone	+$0
WN	warm grey neutral	+$0

For T-leg with height adjustment (A)		
CD	polished aluminum	+$110

Step 10. Casters/Glides		
20	casters	+$0
57	glides	+$0

Conference Corner Table

DT1ME.
DT1MS.
DT1MT.

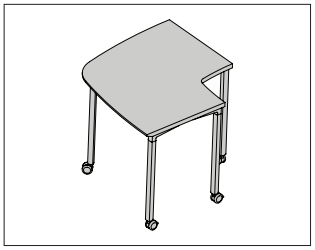

Product Information

Description

This corner table comes in multiple edge styles and has a laminate top with thermoplastic edge, veneer top and edge, or painted top and edge. It has multiple leg/base options, and is available with casters or glides. The caster option has 2 locking and 2 non-locking casters. Glides have 1/2" leveling range. Shipped knocked down.

Notes

Tables have an additional (5th) leg for stability.

Additional ganging bracket kits (Y1338.) can be used with adjacent tables.

For additional details on available edge options see Appendices.

Dimensions

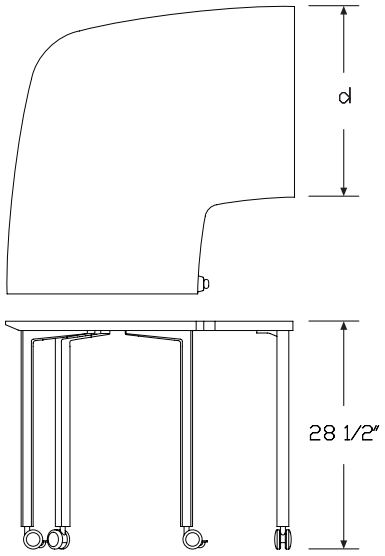

Specification Information

Step 1.

DT1M

Step 2. Edge

S. squared-edge
T. thin-edge
E. eased-edge

Step 3. Depth

24 24" deep
30 30" deep

Step 4. Surface Material

For squared-edge (S.)

L laminate top/thermoplastic edge
W veneer top/veneer edge A
P painted Formcoat® top/edge

For thin-edge (T.)

W veneer top/veneer edge A
P painted Formcoat® top/edge

For eased-edge (E.)

P painted Formcoat® top/edge

Step 5. Leg/Base Type

P post leg

Prices for Steps 1-5.

			P
DT1MS.	**24**	**L**	$1227
		W	$1551
		P	$1413
	30	**L**	$1473
		W	$1882
		P	$1693

			P
DT1MT.	**24**	**W**	$1862
		P	$1502
	30	**W**	$2260
		P	$1803

			P
DT1ME.	**24**	**P**	$1502

	30 P	$1803

Step 6.

Top Finish

For laminate top/thermoplastic edge (L)

28	canyon	+$0
29	misted	+$0
38	twilight	+$0
39	desert	+$0
76	light brown walnut	+$0
91	white	+$0
98	studio white	+$0
8Q	folkstone grey	+$0
CL	cool grey neutral	+$0
HF	inner tone light	+$0
HM	natural maple	+$0
HP	light anigre	+$0
HT	inner tone	+$0
HX	aged cherry	+$0
HY	walnut on cherry	+$0
LA	light ash	+$0
LBA	clear on ash	+$0
LBR	phantom ecru	+$0
LBS	phantom cocoa	+$0
LBU	medium matte walnut	+$0
LBV	warm grey teak	+$0
LBB	oak on ash	+$0
LBC	walnut on ash	+$0
LBD	dark brown walnut	+$0
LBE	medium red walnut	+$0
LBF	neutral twill	+$0
LBG	sarum twill	+$0
LBH	earthen twill	+$0
LBJ	graphite twill	+$0
LBM	crisp linen	+$0
LBN	classic linen	+$0
LBP	casual linen	+$0
LBQ	white twill	+$0
LT	light tone	+$0
LU	soft white	+$0
MT	medium tone	+$0
OG	honey maple	+$0
WL	sandstone	+$0
WN	warm grey neutral	+$0
X1	chalk white	+$0

Top/Edge Finish: Wood Veneer

For veneer top/veneer edge (W)

2U	light brown walnut A	+$85
40	dark brown walnut A	+$85
ED	aged cherry A	+$85
EK	medium red walnut A	+$85
EW	medium matte walnut A	+$85
ET	clear on ash A	+$85
EU	oak on ash A	+$85
EV	walnut on ash A	+$85
UL	natural maple A	+$85
UX	walnut on cherry A	+$85

Top/Edge Finish: Opaque Formcoat®

For painted Formcoat® top/edge (P)

8Q	folkstone grey	+$0
91	white	+$0
CL	cool grey neutral	+$0
LU	soft white	+$0
WL	sandstone	+$0
WN	warm grey neutral	+$0

Step 7. Edge Finish

For laminate top/thermoplastic edge (L)

76	light brown walnut	+$0
8Q	folkstone grey	+$0
91	white	+$0
98	studio white	+$0
CL	cool grey neutral	+$0
LA	light ash	+$0
LBA	clear on ash	+$0
LBR	phantom ecru	+$0
LBS	phantom cocoa	+$0
LBU	medium matte walnut	+$0
LBV	warm grey teak	+$0
LBB	oak on ash	+$0
LBC	walnut on ash	+$0
LBD	dark brown walnut	+$0
LBE	medium red walnut	+$0
LBF	neutral twill	+$0
LBG	sarum twill	+$0
LBH	earthen twill	+$0
LBJ	graphite twill	+$0
LBK	pewter mesh	+$0
LBL	steel mesh	+$0
LBM	crisp linen	+$0
LBN	classic linen	+$0

LBP	casual linen	+$0
LBQ	white twill	+$0
WL	sandstone	+$0
WN	warm grey neutral	+$0
HF	inner tone light	+$0
HM	natural maple	+$0
HP	light anigre	+$0
HT	inner tone	+$0
HX	aged cherry	+$0
HY	walnut on cherry	+$0
LU	soft white	+$0

Step 8. Leg/Base Finish

Metallic Paint

CN	metallic champagne	+$0
EH	metallic bronze	+$0
MS	metallic silver	+$0

Sand Texture Paint

BK	black	+$0

Smooth Paint

8Q	folkstone grey	+$0
91	white	+$0
98	studio white	+$0
BU	black umber	+$0
CL	cool grey neutral	+$0
G2	graphite satin	+$0
HF	inner tone light	+$0
LU	soft white	+$0
MT	medium tone	+$0
SG	slate grey	+$0
WL	sandstone	+$0
WN	warm grey neutral	+$0
CD	polished aluminum	+$110

Step 9. Casters/Glides

20	casters	+$0
57	glides	+$0

Round Corner Table

DT1NE.
DT1NS.
DT1NT.

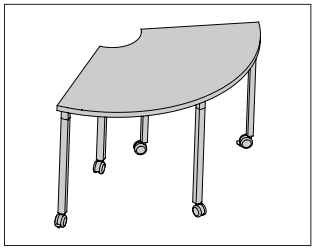

Product Information

Description

This corner table comes in multiple edge styles and has a laminate top with thermoplastic edge, veneer top and edge, or painted top and edge. It has multiple leg/base options, and is available with casters or glides. The caster option has 2 locking and 2 non-locking casters. Glides have 1/2" leveling range. Shipped knocked down.

Notes

Tables have an additional (5th) leg for stability.

3 36" deep tables ganged together make an 84" diameter table.

Additional ganging bracket kits (Y1338.), sold separately, can be used to ensure proper alignment with adjacent tables.

For additional details on available edge options see Appendices.

UL listed when used with Connect™ single circuit electrical product (Y137x.) with post leg (P) option.

Dimensions

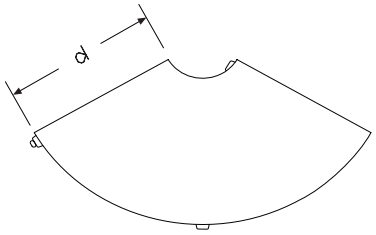

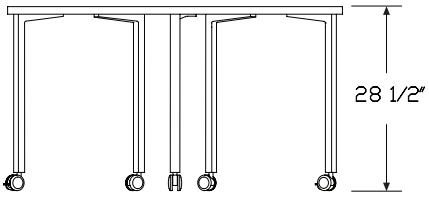

Specification Information

Step 1.

DT1N

Step 2. Edge

S. squared-edge
T. thin-edge
E. eased-edge

Step 3. Depth

24 24" deep
30 30" deep
36 36" deep

Step 4. Surface Material

For squared-edge (S.)

L laminate top/thermoplastic edge
W veneer top/veneer edge A
P painted Formcoat® top/edge

For thin-edge (T.)

W veneer top/veneer edge A
P painted Formcoat® top/edge

For eased-edge (E.)

P painted Formcoat® top/edge

Step 5. Leg/Base Type

P post leg

Prices for Steps 1-5.

			P
DT1NS.	**24**	**L**	$1227
		W	$1551
		P	$1413
	30	**L**	$1473
		W	$1882
		P	$1693
	36	**L**	$1719
		W	$2215
		P	$1975

			P
DT1NT.	**24**	**W**	$1862
		P	$1502

30	W	$2260
	P	$1803
36	W	$2656
	P	$2104

		P
DT1NE. 24	P	$1502
30	P	$1803
36	P	$2104

Step 6.

Top Finish

For laminate top/thermoplastic edge (L)

28	canyon	+$0
29	misted	+$0
38	twilight	+$0
39	desert	+$0
76	light brown walnut	+$0
91	white	+$0
98	studio white	+$0
8Q	folkstone grey	+$0
CL	cool grey neutral	+$0
HF	inner tone light	+$0
HM	natural maple	+$0
HP	light anigre	+$0
HT	inner tone	+$0
HX	aged cherry	+$0
HY	walnut on cherry	+$0
LA	light ash	+$0
LBA	clear on ash	+$0
LBR	phantom ecru	+$0
LBS	phantom cocoa	+$0
LBU	medium matte walnut	+$0
LBV	warm grey teak	+$0
LBB	oak on ash	+$0
LBC	walnut on ash	+$0
LBD	dark brown walnut	+$0
LBE	medium red walnut	+$0
LBF	neutral twill	+$0
LBG	sarum twill	+$0
LBH	earthen twill	+$0
LBJ	graphite twill	+$0
LBM	crisp linen	+$0
LBN	classic linen	+$0
LBP	casual linen	+$0
LBQ	white twill	+$0
LT	light tone	+$0
LU	soft white	+$0
MT	medium tone	+$0
OG	honey maple	+$0
WL	sandstone	+$0
WN	warm grey neutral	+$0
X1	chalk white	+$0

Top/Edge Finish: Wood Veneer

For veneer top/veneer edge (W)

2U	light brown walnut A	+$85
40	dark brown walnut A	+$85
ED	aged cherry A	+$85
EK	medium red walnut A	+$85
EW	medium matte walnut A	+$85
ET	clear on ash A	+$85
EU	oak on ash A	+$85
EV	walnut on ash A	+$85
UL	natural maple A	+$85
UX	walnut on cherry A	+$85

Top/Edge Finish: Opaque Formcoat®

For painted Formcoat® top/edge (P)

8Q	folkstone grey	+$0
91	white	+$0
CL	cool grey neutral	+$0
LU	soft white	+$0
WL	sandstone	+$0
WN	warm grey neutral	+$0

Step 7. Edge Finish

For laminate top/thermoplastic edge (L)

76	light brown walnut	+$0
8Q	folkstone grey	+$0
91	white	+$0
98	studio white	+$0
CL	cool grey neutral	+$0
LA	light ash	+$0
LBA	clear on ash	+$0
LBR	phantom ecru	+$0
LBS	phantom cocoa	+$0
LBU	medium matte walnut	+$0
LBV	warm grey teak	+$0
LBB	oak on ash	+$0
LBC	walnut on ash	+$0
LBD	dark brown walnut	+$0
LBE	medium red walnut	+$0

LBF	neutral twill	+$0
LBG	sarum twill	+$0
LBH	earthen twill	+$0
LBJ	graphite twill	+$0
LBK	pewter mesh	+$0
LBL	steel mesh	+$0
LBM	crisp linen	+$0
LBN	classic linen	+$0
LBP	casual linen	+$0
LBQ	white twill	+$0
WL	sandstone	+$0
WN	warm grey neutral	+$0
HF	inner tone light	+$0
HM	natural maple	+$0
HP	light anigre	+$0
HT	inner tone	+$0
HX	aged cherry	+$0
HY	walnut on cherry	+$0
LU	soft white	+$0

Step 8. Leg/Base Finish

Metallic Paint

CN	metallic champagne	+$0
EH	metallic bronze	+$0
MS	metallic silver	+$0

Sand Texture Paint

BK	black	+$0

Smooth Paint

8Q	folkstone grey	+$0
91	white	+$0
98	studio white	+$0
BU	black umber	+$0
CL	cool grey neutral	+$0
G2	graphite satin	+$0
HF	inner tone light	+$0
LU	soft white	+$0
MT	medium tone	+$0
SG	slate grey	+$0
WL	sandstone	+$0
WN	warm grey neutral	+$0
CD	polished aluminum	+$110

Step 9. Casters/Glides

20	casters	+$0
57	glides	+$0

Flip-Top Rectangular Table

DT5AE.
DT5AS.
DT5AT.

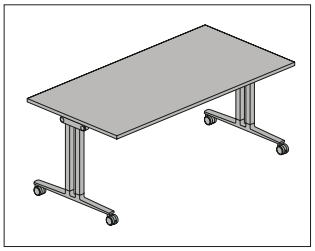

Product Information

Description

This rectangular table comes in multiple edge styles and has a laminate top with thermoplastic edge, laminate top with a thermoplastic backed plywood edge, veneer top and edge, or painted top and edge. It has 2 paddles under the front edge that allow the surface to flip up, minimizing space for storage when not in use. The table has T-legs and is available with casters or glides. The caster option has 2 locking and 2 non-locking casters. Glides have 1/2″ leveling range. Shipped knocked down.

Notes

Thin edge and eased edge tops not available with 18″-deep surfaces.

Cable grommet options available through Vary Easy Program for round pass through grommet with 2 1/4″ hole clearance. Holes are located 3″ from rear edge and 6″ from end for the L and R options. Covers not provided with painted surface option.

Cutouts available for all Connect™ power and data accessories (see Thrive® Portfolio). Cutouts will be located in the center, laterally, and approximately 3″ from the rear edge of surface.

Multiple tables can be nested for storage when surface is flipped up. First table in nest requires 23″ of floor space. All additional tables require only 9″ of additional space.

Table top overhangs the base by 2 3/4″ on each end.

For additional details on available edge options see Appendices.

Only fabric modesty panel (Y1114.) will enable flip top table to fold as intended. It is the recommended modesty panel for use with flip top tables. It is full length and folds out of the way for table storage.

For additional size, edge, finish, and cable management options, see Vary Easy Program in Appendices.

UL listed when used with Connect single circuit electrical product (Y137x.) with T-leg (T) option.

Dimensions

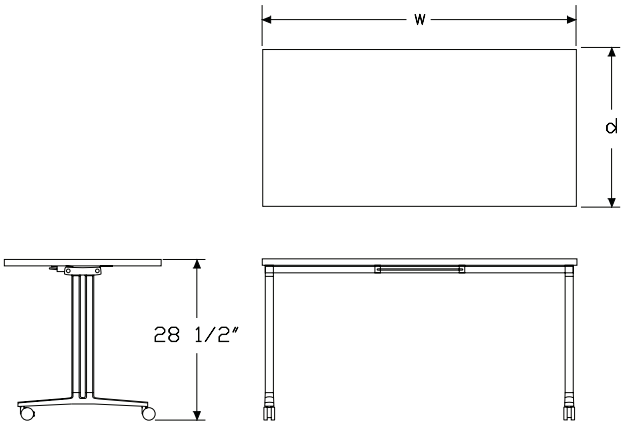

Specification Information

Step 1.

DT5A

Step 2. Edge

S.	squared-edge
T.	thin-edge
E.	eased-edge

Step 3. Depth

For squared-edge (S.)

18	18″ deep
24	24″ deep
30	30″ deep

For eased-edge (E.)

24	24″ deep
30	30″ deep

For thin-edge (T.)

24	24″ deep
30	30″ deep

Step 4. Width

48	48″ wide
60	60″ wide
72	72″ wide

Step 5. Surface Material

For squared-edge (S.)

L	laminate top/thermoplastic edge
U	laminate top/universal edge
W	veneer top/veneer edge A
P	painted Formcoat® top/edge

For thin-edge (T.)

W	veneer top/veneer edge A
P	painted Formcoat® top/edge

For eased-edge (E.)

P	painted Formcoat® top/edge

Step 6. Leg Type

T	T-leg

Prices for Steps 1-6.

		LT	UT	WT	PT
DT5AS. 18	**48**	$1543	1543	1871	1776
	60	$1619	1619	1971	1863
	72	$1701	1701	2071	1956
24	**48**	$1575	1575	1910	1811
	60	$1653	1653	2013	1903
	72	$1735	1735	2114	1997
30	**48**	$1670	1670	2028	1918
	60	$1820	1820	2216	2092
	72	$1910	1910	2329	2196
DT5AT. 24	**48**	—	—	$2291	1931
	60	—	—	$2413	2025
	72	—	—	$2536	2126
30	**48**	—	—	$2435	2045
	60	—	—	$2657	2228
	72	—	—	$2793	2339
DT5AE. 24	**48**	—	—	—	$1931
	60	—	—	—	$2025
	72	—	—	—	$2126
30	**48**	—	—	—	$2045
	60	—	—	—	$2228
	72	—	—	—	$2339

Step 7.

Top Finish

For laminate top/thermoplastic edge (L) or laminate top/universal edge (U)

76	light brown walnut	+$0
91	white	+$0
98	studio white	+$0
8Q	folkstone grey	+$0
CL	cool grey neutral	+$0
HF	inner tone light	+$0
HM	natural maple	+$0
HP	light anigre	+$0
HT	inner tone	+$0
HX	aged cherry	+$0
HY	walnut on cherry	+$0
LA	light ash	+$0
LBA	clear on ash	+$0
LBR	phantom ecru	+$0
LBS	phantom cocoa	+$0
LBU	medium matte walnut	+$0
LBV	warm grey teak	+$0
LBB	oak on ash	+$0
LBC	walnut on ash	+$0
LBD	dark brown walnut	+$0
LBE	medium red walnut	+$0
LBF	neutral twill	+$0
LBG	sarum twill	+$0
LBH	earthen twill	+$0
LBJ	graphite twill	+$0
LBM	crisp linen	+$0
LBN	classic linen	+$0
LBP	casual linen	+$0
LBQ	white twill	+$0
LU	soft white	+$0
OG	honey maple	+$0
WL	sandstone	+$0
WN	warm grey neutral	+$0

Top/Edge Finish: Wood Veneer

For veneer top/veneer edge (W)

2U	light brown walnut A	+$50
40	dark brown walnut A	+$50
ED	aged cherry A	+$50
EK	medium red walnut A	+$50
EW	medium matte walnut A	+$50
ET	clear on ash A	+$50
EU	oak on ash A	+$50
EV	walnut on ash A	+$50
UL	natural maple A	+$50
UX	walnut on cherry A	+$50

Top/Edge Finish: Opaque Formcoat®

For painted Formcoat® top/edge (P)

8Q	folkstone grey	+$0
91	white	+$0
CL	cool grey neutral	+$0
LU	soft white	+$0
WL	sandstone	+$0
WN	warm grey neutral	+$0

Step 8. Edge Finish

For laminate top/thermoplastic edge (L)

76	light brown walnut	+$0
8Q	folkstone grey	+$0
91	white	+$0
98	studio white	+$0
CL	cool grey neutral	+$0
LA	light ash	+$0
LBA	clear on ash	+$0
LBR	phantom ecru	+$0
LBS	phantom cocoa	+$0
LBU	medium matte walnut	+$0
LBV	warm grey teak	+$0
LBB	oak on ash	+$0
LBC	walnut on ash	+$0
LBD	dark brown walnut	+$0
LBE	medium red walnut	+$0
LBF	neutral twill	+$0
LBG	sarum twill	+$0
LBH	earthen twill	+$0
LBJ	graphite twill	+$0
LBK	pewter mesh	+$0
LBL	steel mesh	+$0
LBM	crisp linen	+$0

LBN	classic linen	+$0
LBP	casual linen	+$0
LBQ	white twill	+$0
WL	sandstone	+$0
WN	warm grey neutral	+$0
HF	inner tone light	+$0
HM	natural maple	+$0
HP	light anigre	+$0
HT	inner tone	+$0
HX	aged cherry	+$0
HY	walnut on cherry	+$0
LU	soft white	+$0
OG	honey maple	+$0

For laminate top/universal edge (U)

PLY	plywood edge	+$50

Step 9. Leg Finish

Metallic Paint

CN	metallic champagne	+$0
EH	metallic bronze	+$0
MS	metallic silver	+$0

Sand Texture Paint

BK	black	+$0

Smooth Paint

8Q	folkstone grey	+$0
91	white	+$0
98	studio white	+$0
BU	black umber	+$0
CL	cool grey neutral	+$0
G2	graphite satin	+$0
HF	inner tone light	+$0
LU	soft white	+$0
MT	medium tone	+$0
SG	slate grey	+$0
WL	sandstone	+$0
WN	warm grey neutral	+$0
CD	polished aluminum	+$110

Step 10. Casters/Glides

20	casters	+$0
57	glides	+$0

Standard-Height Table Leg DT2A.

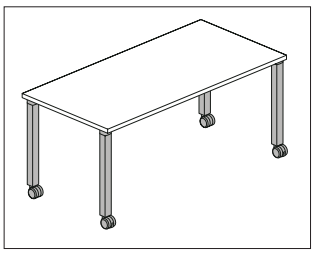

Product Information

Description

This product is a kit of a full set of table legs with attachment hardware. It has multiple leg options, and is available with casters or glides. The caster option has 2 locking and 2 non-locking casters. Glides have 1/2" leveling range. Shipped knocked down.

Notes

Height adjustable table legs have a 5" range in 1" increments.

Tabletop must be no more than 30" deep and no less than 24" deep for C and D options. Tabletop must be no more than 36" deep and no less than 18" deep for P, A, and T options.

Tabletops 54" and wider are recommended to have a steel support channel.

Not recommended for tables wider than 84".

Table leg must be located such that the floor glides are not more than 3" from the front and rear sides for table stability.

Tabletop can over hang sides of table base by no more than 15" for tops 60" and wider.

1" long screws provided with base are recommended to attach to tabletop. Ensure mounting surface is no less than 1" thick.

Dimensions

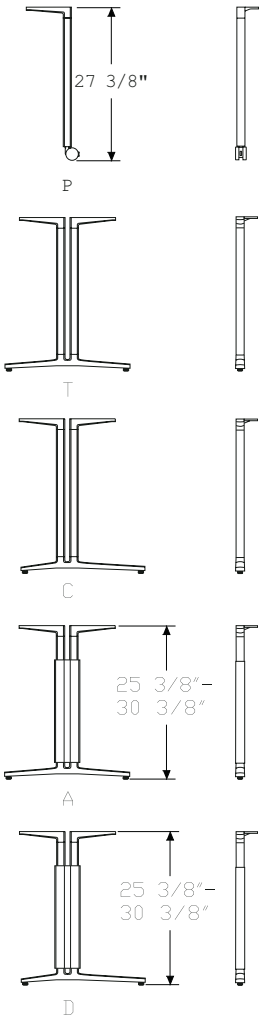

Specification Information

Step 1.

DT2A.

Step 2. Depth

18	18″ deep
24	24″ deep
30	30″ deep
36	36″ deep

Step 3. Leg Type

For 18″ deep (18) or 36″ deep (36)

P	post leg
T	T-leg
A	T-leg with height adjustment

For 24″ deep (24) or 30″ deep (30)

P	post leg
T	T-leg
A	T-leg with height adjustment
C	C-leg
D	C-leg with height adjustment

Step 4. Table Top Surface Material

For post leg (P)

P	painted table top
Z	laminate or veneer table top

For T-leg (T), T-leg with height adjustment (A), C-leg (C), or C-leg with height adjustment (D)

N	laminate, painted or veneer table top

Prices for Steps 1-4.

			N	P	Z
DT2A.	**18**	**P**	—	$577	577
		T	$731	—	—
		A	$1113	—	—
	24	**P**	—	$577	577
		T	$756	—	—
		A	$1150	—	—
		C	$756	—	—
		D	$1165	—	—
	30	**P**	—	$577	577
		T	$756	—	—
		A	$1150	—	—
		C	$756	—	—
		D	$1165	—	—
	36	**P**	—	$577	577
		T	$798	—	—
		A	$1192	—	—

Step 5. Leg Finish

Metallic Paint

For post leg (P), T-leg (T), or C-leg (C)

CN	metallic champagne	+$0
EH	metallic bronze	+$0
MS	metallic silver	+$0

Sand Texture Paint

For post leg (P), T-leg (T), or C-leg (C)

BK	black	+$0

Smooth Paint

For post leg (P), T-leg (T), or C-leg (C)

8Q	folkstone grey	+$0
91	white	+$0
98	studio white	+$0
BU	black umber	+$0
CL	cool grey neutral	+$0
G2	graphite satin	+$0
HF	inner tone light	+$0
LU	soft white	+$0
MT	medium tone	+$0
SG	slate grey	+$0
WL	sandstone	+$0
WN	warm grey neutral	+$0

For post leg (P), T-leg (T), or C-leg (C)

CD	polished aluminum	+$110

Metallic Paint

For T-leg with height adjustment (A) or C-leg with height adjustment (D)

CN	metallic champagne	+$0
EH	metallic bronze	+$0
MS	metallic silver	+$0

Smooth Paint		
For T-leg with height adjustment (A) or C-leg with height adjustment (D)		
8Q	folkstone grey	+$0
91	white	+$0
98	studio white	+$0
BU	black umber	+$0
CL	cool grey neutral	+$0
G2	graphite satin	+$0
HF	inner tone light	+$0
LU	soft white	+$0
MT	medium tone	+$0
SG	slate grey	+$0
WL	sandstone	+$0
WN	warm grey neutral	+$0

For T-leg with height adjustment (A) or C-leg with height adjustment (D)		
CD	polished aluminum	+$110

Step 6. Casters/Glides		
20	casters	+$0
57	glides	+$0

Standard-Height Table Base DT2B.

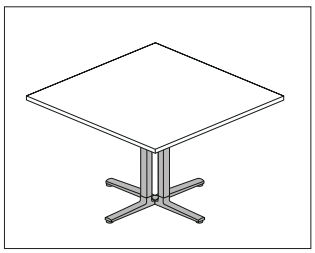

Product Information

Description

This product is a kit of a full set of center column table legs with attachment hardware. It has either single column S or 4 column X leg options, and is available with casters or glides. The caster option has 2 locking and 2 non-locking casters. Glides have 1/2" leveling range. Shipped knocked down.

Notes

Tabletop must be no more than 42" deep and no less than 30" deep for X base.

Tabletop must be no more than 36" deep and no less than 24" deep for S base.

Table base to be centered side-to-side and left-to-right under tabletop.

Tabletop can over hang sides of table base by no more than 15" for tops 60" and wider.

1" long screws provided with base are recommended to attach to tabletop. Ensure mounting surface is no less than 1" thick.

Dimensions

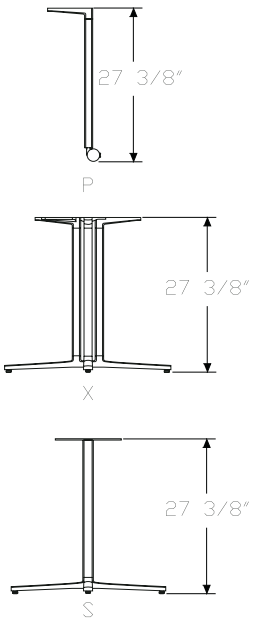

Specification Information

Step 1.

DT2B.

Step 2. Leg/Base Type

X	4-column base	
S	single-column base	

Prices for Steps 1-2.

DT2B.	**X**	$806
	S	$561

Step 3. Leg/Base Finish

Metallic Paint

CN	metallic champagne	+$0
EH	metallic bronze	+$0
MS	metallic silver	+$0

Sand Texture Paint

BK	black	+$0

Smooth Paint

8Q	folkstone grey	+$0
91	white	+$0
98	studio white	+$0
BU	black umber	+$0
CL	cool grey neutral	+$0
G2	graphite satin	+$0
HF	inner tone light	+$0
LU	soft white	+$0
MT	medium tone	+$0
SG	slate grey	+$0
WL	sandstone	+$0
WN	warm grey neutral	+$0
CD	polished aluminum	+$110

Step 4. Casters/Glides

20	casters	+$0
57	glides	+$0

Standing-Height Square Table

DT3BE.
DT3BS.
DT3BT.

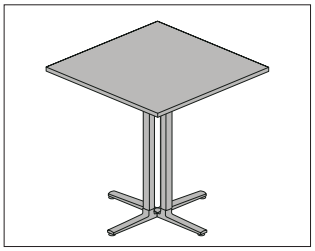

Product Information

Description

This 42"-high, square table comes in multiple edge styles and has a laminate top with thermoplastic edge, laminate top with a thermoplastic backed plywood edge, veneer top and edge, or painted top and edge. The base has glides with 1/2" leveling range. Shipped knocked down.

Notes

For additional details on available edge options see Appendices.

For additional size, edge, and finish options, see Vary Easy Program in Appendices.

Dimensions

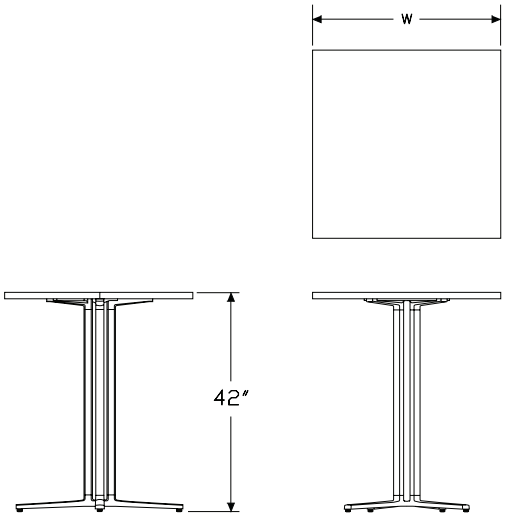

Specification Information

Step 1.

DT3B

Step 2. Edge

S. squared-edge
T. thin-edge
E. eased-edge

Step 3. Depth/Width

3030 30" deep x 30" wide
3636 36" deep x 36" wide

Step 4. Surface Material

For squared-edge (S.)

L laminate top/thermoplastic edge
U laminate top/universal edge
W veneer top/veneer edge A
P painted Formcoat® top/edge

For thin-edge (T.)

W veneer top/veneer edge A
P painted Formcoat® top/edge

For eased-edge (E.)

P painted Formcoat® top/edge

Step 5. Base Type

X 4-column base

Prices for Steps 1-5.

		X
DT3BS. 3030	**L**	$984
	U	$984
	W	$1168
	P	$1132
3636	**L**	$1179
	U	$1179
	W	$1414
	P	$1358

		X
DT3BT. 3030	**W**	$1403
	P	$1205
3636	**W**	$1694
	P	$1445

		X
DT3BE. 3030 P		$1205
	3636 P	$1445

Step 6.

Top Finish

For laminate top/thermoplastic edge (L) or laminate top/universal edge (U)

76	light brown walnut	+$0
91	white	+$0
98	studio white	+$0
8Q	folkstone grey	+$0
CL	cool grey neutral	+$0
HF	inner tone light	+$0
HM	natural maple	+$0
HP	light anigre	+$0
HT	inner tone	+$0
HX	aged cherry	+$0
HY	walnut on cherry	+$0
LA	light ash	+$0
LBA	clear on ash	+$0
LBR	phantom ecru	+$0
LBS	phantom cocoa	+$0
LBU	medium matte walnut	+$0
LBV	warm grey teak	+$0
LBB	oak on ash	+$0
LBC	walnut on ash	+$0
LBD	dark brown walnut	+$0
LBE	medium red walnut	+$0
LBF	neutral twill	+$0
LBG	sarum twill	+$0
LBH	earthen twill	+$0
LBJ	graphite twill	+$0
LBM	crisp linen	+$0
LBN	classic linen	+$0
LBP	casual linen	+$0
LBQ	white twill	+$0
LU	soft white	+$0
WL	sandstone	+$0
WN	warm grey neutral	+$0

Top/Edge Finish: Wood Veneer

For veneer top/veneer edge (W)

2U	light brown walnut A	+$50
40	dark brown walnut A	+$50
ED	aged cherry A	+$50
EK	medium red walnut A	+$50
EW	medium matte walnut A	+$50
ET	clear on ash A	+$50
EU	oak on ash A	+$50
EV	walnut on ash A	+$50
UL	natural maple A	+$50
UX	walnut on cherry A	+$50

Top/Edge Finish: Opaque Formcoat®

For painted Formcoat® top/edge (P)

8Q	folkstone grey	+$0
91	white	+$0
CL	cool grey neutral	+$0
LU	soft white	+$0
WL	sandstone	+$0
WN	warm grey neutral	+$0

Standing-Height Square Table

continued

Step 7. Edge Finish

For laminate top/thermoplastic edge (L)

76	light brown walnut	+$0
8Q	folkstone grey	+$0
91	white	+$0
98	studio white	+$0
CL	cool grey neutral	+$0
LA	light ash	+$0
LBA	clear on ash	+$0
LBR	phantom ecru	+$0
LBS	phantom cocoa	+$0
LBU	medium matte walnut	+$0
LBV	warm grey teak	+$0
LBB	oak on ash	+$0
LBC	walnut on ash	+$0
LBD	dark brown walnut	+$0
LBE	medium red walnut	+$0
LBF	neutral twill	+$0
LBG	sarum twill	+$0
LBH	earthen twill	+$0
LBJ	graphite twill	+$0
LBK	pewter mesh	+$0
LBL	steel mesh	+$0
LBM	crisp linen	+$0
LBN	classic linen	+$0
LBP	casual linen	+$0
LBQ	white twill	+$0
WL	sandstone	+$0
WN	warm grey neutral	+$0
HF	inner tone light	+$0
HM	natural maple	+$0
HP	light anigre	+$0
HT	inner tone	+$0
HX	aged cherry	+$0
HY	walnut on cherry	+$0
LU	soft white	+$0

For laminate top/universal edge (U)

PLY	plywood edge	+$50

Step 8. Base Finish

Metallic Paint

CN	metallic champagne	+$0
EH	metallic bronze	+$0
MS	metallic silver	+$0

Sand Texture Paint

BK	black	+$0

Smooth Paint

8Q	folkstone grey	+$0
91	white	+$0
98	studio white	+$0
BU	black umber	+$0
CL	cool grey neutral	+$0
G2	graphite satin	+$0
HF	inner tone light	+$0
LU	soft white	+$0
MT	medium tone	+$0
SG	slate grey	+$0
WL	sandstone	+$0
WN	warm grey neutral	+$0
CD	polished aluminum	+$110

Standing-Height Round Table

DT3CE.
DT3CS.
DT3CT.

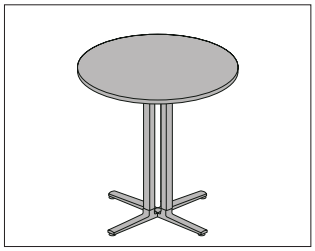

Product Information

Description

This 42"-high, round table comes in multiple edge styles and has a laminate top with thermoplastic edge, veneer top and edge, or painted top and edge. The base has glides with 1/2" leveling range. Shipped knocked down.

Notes

For additional details on available edge options see Appendices.

For additional size, edge, and finish options, see Vary Easy Program in Appendices.

Dimensions

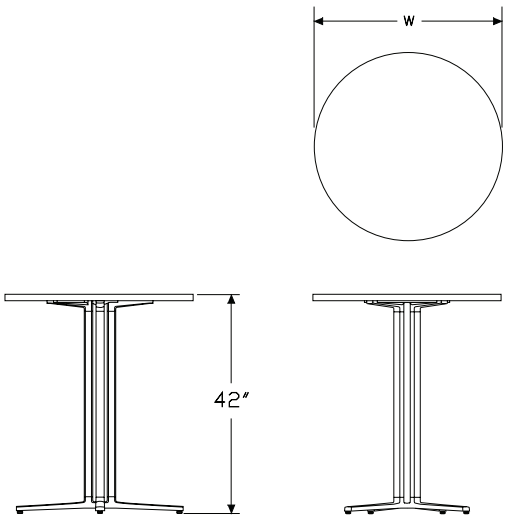

Specification Information

Step 1.

DT3C

Step 2. Edge

S. squared-edge
T. thin-edge
E. eased-edge

Step 3. Diameter

30 30" diameter
36 36" diameter

Step 4. Surface Material

For squared-edge (S.)

L laminate top/thermoplastic edge
W veneer top/veneer edge [A]
P painted Formcoat® top/edge

For thin-edge (T.)

W veneer top/veneer edge [A]
P painted Formcoat® top/edge

For eased-edge (E.)

P painted Formcoat® top/edge

Step 5. Base Type

X 4-column base

Prices for Steps 1-5.

			X
DT3CS.	**30**	**L**	$1132
		W	$1342
		P	$1302
	36	**L**	$1357
		W	$1624
		P	$1562

			X
DT3CT.	**30**	**W**	$1611
		P	$1385
	36	**W**	$1950
		P	$1660

			X
DT3CE.	**30**	**P**	$1385

36 P		$1660

Step 6.

Top Finish

For laminate top/thermoplastic edge (L)

76	light brown walnut	+$0
91	white	+$0
98	studio white	+$0
8Q	folkstone grey	+$0
CL	cool grey neutral	+$0
HF	inner tone light	+$0
HM	natural maple	+$0
HP	light anigre	+$0
HT	inner tone	+$0
HX	aged cherry	+$0
HY	walnut on cherry	+$0
LA	light ash	+$0
LBA	clear on ash	+$0
LBR	phantom ecru	+$0
LBS	phantom cocoa	+$0
LBU	medium matte walnut	+$0
LBV	warm grey teak	+$0
LBB	oak on ash	+$0
LBC	walnut on ash	+$0
LBD	dark brown walnut	+$0
LBE	medium red walnut	+$0
LBF	neutral twill	+$0
LBG	sarum twill	+$0
LBH	earthen twill	+$0
LBJ	graphite twill	+$0
LBM	crisp linen	+$0
LBN	classic linen	+$0
LBP	casual linen	+$0
LBQ	white twill	+$0
LU	soft white	+$0
WL	sandstone	+$0
WN	warm grey neutral	+$0

Top/Edge Finish: Wood Veneer

For veneer top/veneer edge (W)

2U	light brown walnut A	+$50
40	dark brown walnut A	+$50
ED	aged cherry A	+$50
EK	medium red walnut A	+$50
EW	medium matte walnut A	+$50
ET	clear on ash A	+$50
EU	oak on ash A	+$50
EV	walnut on ash A	+$50
UL	natural maple A	+$50
UX	walnut on cherry A	+$50

Top/Edge Finish: Opaque Formcoat®

For painted Formcoat® top/edge (P)

8Q	folkstone grey	+$0
91	white	+$0
CL	cool grey neutral	+$0
LU	soft white	+$0
WL	sandstone	+$0
WN	warm grey neutral	+$0

Step 7. Edge Finish

For laminate top/thermoplastic edge (L)

76	light brown walnut	+$0
8Q	folkstone grey	+$0
91	white	+$0
98	studio white	+$0
CL	cool grey neutral	+$0
LA	light ash	+$0
LBA	clear on ash	+$0
LBR	phantom ecru	+$0
LBS	phantom cocoa	+$0
LBU	medium matte walnut	+$0
LBV	warm grey teak	+$0
LBB	oak on ash	+$0
LBC	walnut on ash	+$0
LBD	dark brown walnut	+$0
LBE	medium red walnut	+$0
LBF	neutral twill	+$0
LBG	sarum twill	+$0
LBH	earthen twill	+$0
LBJ	graphite twill	+$0
LBK	pewter mesh	+$0
LBL	steel mesh	+$0
LBM	crisp linen	+$0
LBN	classic linen	+$0

LBP	casual linen	+$0
LBQ	white twill	+$0
WL	sandstone	+$0
WN	warm grey neutral	+$0
HF	inner tone light	+$0
HM	natural maple	+$0
HP	light anigre	+$0
HT	inner tone	+$0
HX	aged cherry	+$0
HY	walnut on cherry	+$0
LU	soft white	+$0

Step 8. Base Finish

Metallic Paint

CN	metallic champagne	+$0
EH	metallic bronze	+$0
MS	metallic silver	+$0

Sand Texture Paint

BK	black	+$0

Smooth Paint

8Q	folkstone grey	+$0
91	white	+$0
98	studio white	+$0
BU	black umber	+$0
CL	cool grey neutral	+$0
G2	graphite satin	+$0
HF	inner tone light	+$0
LU	soft white	+$0
MT	medium tone	+$0
SG	slate grey	+$0
WL	sandstone	+$0
WN	warm grey neutral	+$0
CD	polished aluminum	+$110

Occasional Table, Square

DT4BS.
DT4BT.

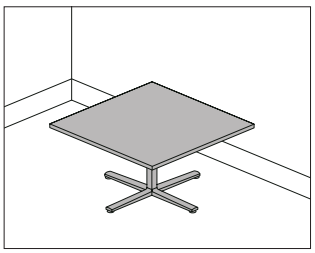

Product Information

Description

This 16″-high, square table comes in multiple edge styles and has a laminate top with thermoplastic edge, laminate top with a thermoplastic backed plywood edge, veneer top and edge, or painted top and edge. The base has glides with 1/2″ leveling range. Shipped knocked down.

Notes

For additional details on available edge options see Appendices.

For additional size, edge, and finish options, see Vary Easy Program in Appendices.

Dimensions

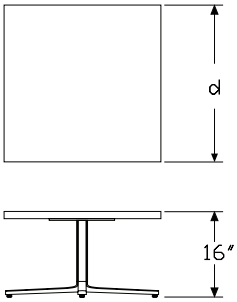

Specification Information

Step 1.

DT4B

Step 2. Edge

S. squared-edge
T. thin-edge

Step 3. Depth/Width

2424 24″ deep x 24″ wide
3030 30″ deep x 30″ wide
3636 36″ deep x 36″ wide

Step 4. Surface Material

For squared-edge (S.)

L laminate top/thermoplastic edge
U laminate top/universal edge
W veneer top/veneer edge [A]
P painted Formcoat® top/edge

For thin-edge (T.)

W veneer top/veneer edge [A]
P painted Formcoat® top/edge

Step 5. Base Type

S single-column base

Prices for Steps 1-5.

		S
DT4BS. 2424	**L**	$751
	U	$751
	W	$878
	P	$864
3030	**L**	$901
	U	$901
	W	$1063
	P	$1037
3636	**L**	$1037
	U	$1037
	W	$1231
	P	$1192

		S
DT4BT. 2424	**W**	$1052
	P	$920

3030	**W**	$1277
	P	$1102
3636	**W**	$1481
	P	$1269

Step 6.

Top Finish

For laminate top/thermoplastic edge (L) or laminate top/universal edge (U)

28	canyon	+$0
29	misted	+$0
38	twilight	+$0
39	desert	+$0
76	light brown walnut	+$0
91	white	+$0
98	studio white	+$0
8Q	folkstone grey	+$0
CL	cool grey neutral	+$0
HF	inner tone light	+$0
HM	natural maple	+$0
HP	light anigre	+$0
HT	inner tone	+$0
HX	aged cherry	+$0
HY	walnut on cherry	+$0
LA	light ash	+$0
LBA	clear on ash	+$0
LBR	phantom ecru	+$0
LBS	phantom cocoa	+$0
LBU	medium matte walnut	+$0
LBV	warm grey teak	+$0
LBB	oak on ash	+$0
LBC	walnut on ash	+$0
LBD	dark brown walnut	+$0
LBE	medium red walnut	+$0
LBF	neutral twill	+$0
LBG	sarum twill	+$0
LBH	earthen twill	+$0
LBJ	graphite twill	+$0
LBM	crisp linen	+$0
LBN	classic linen	+$0
LBP	casual linen	+$0
LBQ	white twill	+$0
LT	light tone	+$0
LU	soft white	+$0
MT	medium tone	+$0
OG	honey maple	+$0
WL	sandstone	+$0
WN	warm grey neutral	+$0
X1	chalk white	+$0

Top/Edge Finish: Wood Veneer

For veneer top/veneer edge (W)

2U	light brown walnut A	+$50
40	dark brown walnut A	+$50
ED	aged cherry A	+$50
EK	medium red walnut A	+$50
EW	medium matte walnut A	+$50
ET	clear on ash A	+$50
EU	oak on ash A	+$50
EV	walnut on ash A	+$50
UL	natural maple A	+$50
UX	walnut on cherry A	+$50

Top/Edge Finish: Opaque Formcoat®

For painted Formcoat® top/edge (P)

8Q	folkstone grey	+$0
91	white	+$0
CL	cool grey neutral	+$0
LU	soft white	+$0
WL	sandstone	+$0
WN	warm grey neutral	+$0

Step 7. Edge Finish

For laminate top/thermoplastic edge (L)

76	light brown walnut	+$0
8Q	folkstone grey	+$0
91	white	+$0
98	studio white	+$0
CL	cool grey neutral	+$0
HF	inner tone light	+$0
HM	natural maple	+$0
HP	light anigre	+$0
HT	inner tone	+$0
HX	aged cherry	+$0
HY	walnut on cherry	+$0
LA	light ash	+$0
LBA	clear on ash	+$0
LBB	oak on ash	+$0
LBC	walnut on ash	+$0
LBD	dark brown walnut	+$0
LBE	medium red walnut	+$0
LBF	neutral twill	+$0
LBG	sarum twill	+$0
LBH	earthen twill	+$0
LBJ	graphite twill	+$0
LBK	pewter mesh	+$0
LBL	steel mesh	+$0
LBM	crisp linen	+$0
LBN	classic linen	+$0
LBP	casual linen	+$0
LBQ	white twill	+$0
LBR	phantom ecru	+$0
LBS	phantom cocoa	+$0
LBU	medium matte walnut	+$0
LBV	warm grey teak	+$0
LU	soft white	+$0
WL	sandstone	+$0
WN	warm grey neutral	+$0

For laminate top/universal edge (U)

PLY	plywood edge	+$50

Step 8. Base Finish

Metallic Paint

CN	metallic champagne	+$0
EH	metallic bronze	+$0
MS	metallic silver	+$0

Sand Texture Paint

BK	black	+$0

Smooth Paint

8Q	folkstone grey	+$0
91	white	+$0
98	studio white	+$0
BU	black umber	+$0
CL	cool grey neutral	+$0
G2	graphite satin	+$0
HF	inner tone light	+$0
LU	soft white	+$0
MT	medium tone	+$0
SG	slate grey	+$0
WL	sandstone	+$0
WN	warm grey neutral	+$0
CD	polished aluminum	+$110

Occasional Table, Round

DT4CS.
DT4CT.

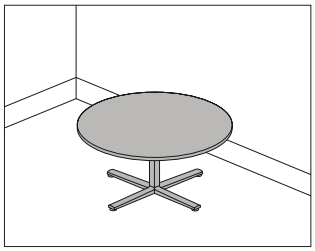

Product Information

Description

This 16"-high, round table comes in multiple edge styles and has a laminate top with thermoplastic edge, veneer top and edge, or painted top and edge. The base has glides with 1/2" leveling range. Shipped knocked down.

Notes

For additional details on available edge options see Appendices.

For additional size, edge, and finish options, see Vary Easy Program in Appendices.

Dimensions

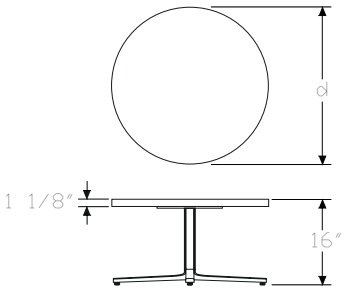

Specification Information

Step 1.

DT4C

Step 2. Edge

S. squared-edge
T. thin-edge

Step 3. Diameter

30 30" diameter
36 36" diameter

Step 4. Surface Material

For squared-edge (S.)

L laminate top/thermoplastic edge
W veneer top/veneer edge A
P painted Formcoat® top/edge

For thin-edge (T.)

W veneer top/veneer edge A
P painted Formcoat® top/edge

Step 5. Base Type

S single-column base

Prices for Steps 1-5.

			S
DT4CS.	**30**	**L**	$1035
		W	$1223
		P	$1191
	36	**L**	$1191
		W	$1417
		P	$1369

			S
DT4CT.	**30**	**W**	$1466
		P	$1268
	36	**W**	$1700
		P	$1458

Step 6.

Top Finish

For laminate top/thermoplastic edge (L)

28	canyon	+$0
29	misted	+$0

38	twilight	+$0
39	desert	+$0
76	light brown walnut	+$0
91	white	+$0
98	studio white	+$0
8Q	folkstone grey	+$0
CL	cool grey neutral	+$0
HF	inner tone light	+$0
HM	natural maple	+$0
HP	light anigre	+$0
HT	inner tone	+$0
HX	aged cherry	+$0
HY	walnut on cherry	+$0
LA	light ash	+$0
LBA	clear on ash	+$0
LBR	phantom ecru	+$0
LBS	phantom cocoa	+$0
LBU	medium matte walnut	+$0
LBV	warm grey teak	+$0
LBB	oak on ash	+$0
LBC	walnut on ash	+$0
LBD	dark brown walnut	+$0
LBE	medium red walnut	+$0
LBF	neutral twill	+$0
LBG	sarum twill	+$0
LBH	earthen twill	+$0
LBJ	graphite twill	+$0
LBM	crisp linen	+$0
LBN	classic linen	+$0
LBP	casual linen	+$0
LBQ	white twill	+$0
LT	light tone	+$0
LU	soft white	+$0
MT	medium tone	+$0
OG	honey maple	+$0
WL	sandstone	+$0
WN	warm grey neutral	+$0
X1	chalk white	+$0

Top/Edge Finish: Wood Veneer

For veneer top/veneer edge (W)

2U	light brown walnut A	+$50
40	dark brown walnut A	+$50
ED	aged cherry A	+$50
EK	medium red walnut A	+$50
EW	medium matte walnut A	+$50
ET	clear on ash A	+$50
EU	oak on ash A	+$50
EV	walnut on ash A	+$50
UL	natural maple A	+$50
UX	walnut on cherry A	+$50

Top/Edge Finish: Opaque Formcoat®

For painted Formcoat® top/edge (P)

8Q	folkstone grey	+$0
91	white	+$0
CL	cool grey neutral	+$0
LU	soft white	+$0
WL	sandstone	+$0
WN	warm grey neutral	+$0

Step 7. Edge Finish

For laminate top/thermoplastic edge (L)

76	light brown walnut	+$0
8Q	folkstone grey	+$0
91	white	+$0
98	studio white	+$0
CL	cool grey neutral	+$0
HF	inner tone light	+$0
HM	natural maple	+$0
HP	light anigre	+$0
HT	inner tone	+$0
HX	aged cherry	+$0
HY	walnut on cherry	+$0
LA	light ash	+$0
LBA	clear on ash	+$0
LBB	oak on ash	+$0
LBC	walnut on ash	+$0
LBD	dark brown walnut	+$0
LBE	medium red walnut	+$0
LBF	neutral twill	+$0
LBG	sarum twill	+$0
LBH	earthen twill	+$0
LBJ	graphite twill	+$0
LBK	pewter mesh	+$0
LBL	steel mesh	+$0

LBM	crisp linen	+$0
LBN	classic linen	+$0
LBP	casual linen	+$0
LBQ	white twill	+$0
LBR	phantom ecru	+$0
LBS	phantom cocoa	+$0
LBU	medium matte walnut	+$0
LBV	warm grey teak	+$0
LU	soft white	+$0
WL	sandstone	+$0
WN	warm grey neutral	+$0

Step 8. Base Finish

Metallic Paint

CN	metallic champagne	+$0
EH	metallic bronze	+$0
MS	metallic silver	+$0

Sand Texture Paint

BK	black	+$0

Smooth Paint

8Q	folkstone grey	+$0
91	white	+$0
98	studio white	+$0
BU	black umber	+$0
CL	cool grey neutral	+$0
G2	graphite satin	+$0
HF	inner tone light	+$0
LU	soft white	+$0
MT	medium tone	+$0
SG	slate grey	+$0
WL	sandstone	+$0
WN	warm grey neutral	+$0
CD	polished aluminum	+$110

Pari Screen, Delineation FT354.

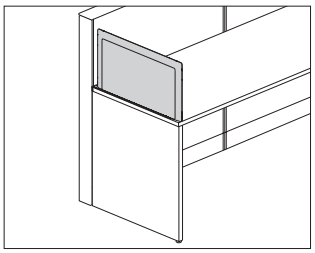

Product Information

Description

This tackable fabric screen attaches to a work surface either at the seam or at the right or left edge to provide division and boundary between workers. It attaches with no interference from supports below the work surface. Attachment hardware included.

Notes

Screen height is 13½″ or 17½″ above work surface, aligning with bead heights of 41″ and 45″.

Screen width matches work surface depths that have a 1″ gap at the back edge.

2 attachment methods ship with the end-of-run right handed (CR) and end-of-run left handed (CL) screen. The screen can be installed using the bracket, or using threaded screws that drill bayonets directly into the surface. See planning guide for exact location of holes.

End-of-run screen does not work on Canvas Beam.

See planning guide for applications and other compatible product lines.

Screen accepts Customer's Own Material (COM). Yardage is estimated for nondirectional 54″-wide fabrics.

For vertical fabric direction (T):

Height—Yardage

42—1.19

46—1.45

For horizontal fabric direction (R):

Width—Yardage

24—0.90

30—1.10

36—1.30

For information on multiple quantities or directional fabrics, contact COM Department. See Order Information in Appendices.

Dimensions

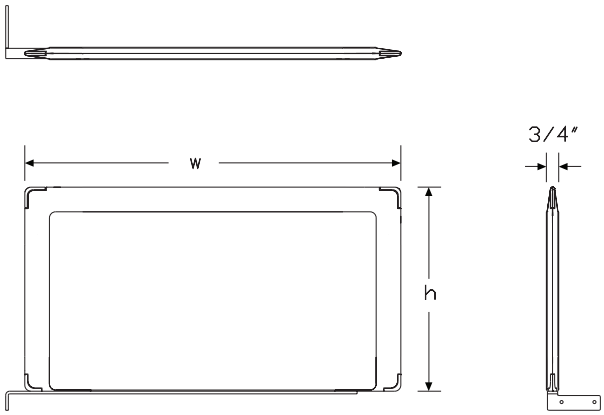

Specification Information

Step 1.

FT354. A

Step 2. Attachment Type

CL	Canvas Surface Attached, End of Run Left Handed A
CR	Canvas Surface Attached, End of Run Right Handed A

Step 3. Height

42	42″ high A
46	46″ high A

Step 4. Width

24	24″ wide A
30	30″ wide A
36	36″ wide A

Step 5. Surface Material

R	tackable fabric, horizontal A
T	tackable fabric A

Prices for Steps 1-5.

			24R	24T	30R	30T	36R	36T
FT354.	**CL**	**42**	$860	860	891	891	916	916
		46	$906	906	942	942	978	978
	CR	**42**	$860	860	891	891	916	916
		46	$906	906	942	942	978	978

Step 6. Bracket Finish

8Q	folkstone grey A	+$0
91	white A	+$0
98	studio white A	+$0
BK	black A	+$0
G1	graphite A	+$0
WL	sandstone A	+$0
WN	warm grey neutral A	+$0

Step 7. Fabric

Price Category C	+$107
Price Category 1	+$0
Price Category 2	+$17
Price Category 3	+$40
Price Category 4	+$70
Price Category E	+$169

Flat Edge Screen, Surface Attached

FT356.

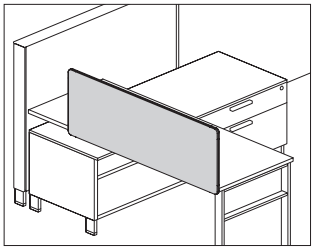

Product Information

Description

This tackable fabric screen attaches to a Canvas work surface to provide boundary with a tackable surface. Attachment hardware included.

Notes

Screen widths are actual dimensions, and extend to the end of Canvas work surfaces.

Screen extends 4″ below surface to hide attachment hardware.

Screen can be flush with back edge of surface, or provide a 1″ gap.

Screens 48″ wide and wider include an additional 1″-wide center mounting bracket.

Screen accepts Customer's Own Material (COM). Yardage is estimated for nondirectional 54″-wide fabrics.

For vertical fabric direction (T):

Height—Yardage

42—1.49
46—1.73
53—2.18

For horizontal fabric direction (R):

Width—Yardage

40—1.34
42—1.51
46—1.62
48—1.71
52—1.81
54—1.90
60—2.07
66—2.27
72—2.46

For information on multiple quantities or directional fabrics, contact COM Department. See Order Information in Appendices.

Dimensions

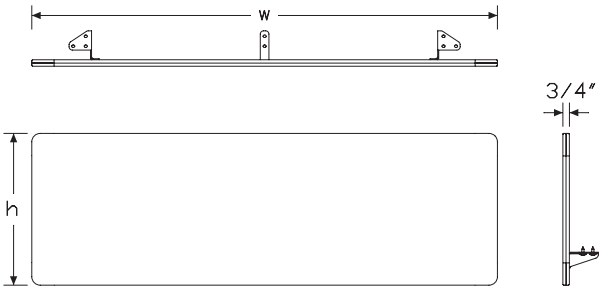

Specification Information

Step 1.

FT356.

Step 2. Attachment

C Canvas surface attached

Step 3. Height

42 42″ high
46 46″ high
53 53″ high

Step 4. Width

40 39½″ wide
42 42″ wide
46 45½″ wide
48 48″ wide
52 51½″ wide
54 54″ wide
60 60″ wide
66 66″ wide
72 72″ wide

Step 5. Surface Material

For 39½″ wide (40), 42″ wide (42), 45½″ wide (46), or 48″ wide (48)

R tackable fabric, horizontal
T tackable fabric

For 51½″ wide (52), 54″ wide (54), 60″ wide (60), 66″ wide (66), or 72″ wide (72)

R tackable fabric, horizontal

Prices for Steps 1-5.

			40R	40T	42R	42T	46R	46T
FT356.	**C**	**42**	$609	609	620	620	648	648
		46	$656	656	686	686	710	710
		53	$850	850	932	932	944	944

			48R	48T	52R	54R	60R	66R
FT356.	**C**	**42**	$663	663	685	705	763	799
		46	$757	757	781	828	896	937
		53	$960	960	972	987	1013	1018

Flat Edge Screen, Surface Attached *continued*

			72R
FT356.	**C**	**42**	$850
		46	$978
		53	$1024

Step 6. Bracket Finish		
G2	graphite satin	+$0

Step 7. Fabric

	40	42	46	48	52
Price Category C	+$134	134	134	134	165
Price Category 1	+$0	0	0	0	0
Price Category 2	+$23	23	23	23	27
Price Category 3	+$54	54	54	54	65
Price Category 4	+$94	94	94	94	113
Price Category E	+$169	169	169	169	169

	54	60	66	72
Price Category C	+$165	165	165	165
Price Category 1	+$0	0	0	0
Price Category 2	+$27	27	27	27
Price Category 3	+$65	65	65	65
Price Category 4	+$113	113	113	113
Price Category E	+$169	169	169	169

Flat Edge Screen, Surface Attached with Modesty

FT357.

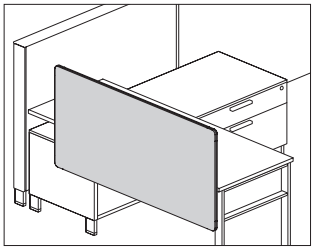

Product Information

Description

This tackable fabric screen attaches to a Canvas work surface to provide boundary and modesty with a tackable surface. An optional cable management trough is available. Trough finish is graphite. Attachment hardware included.

Notes

Screen widths are actual dimensions, and extend to the end of Canvas work surfaces.

Screen extends 9″ below surface for modesty.

Screen can be flush with back edge of surface, or provide a 1″ gap.

Screens 48″ wide and wider include an additional 1″-wide center mounting bracket.

Screen accepts Customer's Own Material (COM). Yardage is estimated for nondirectional 54″-wide fabrics.

For vertical fabric direction (T):

Height—Yardage

42—1.90

46—2.14

53—2.59

For horizontal fabric direction (R):

Width—Yardage

40—2.87

42—3.02

46—3.22

48—3.41

52—3.63

54—3.78

60—4.17

66—4.54

72—4.92

For information on multiple quantities or directional fabrics, contact COM Department. See Order Information in Appendices.

Dimensions

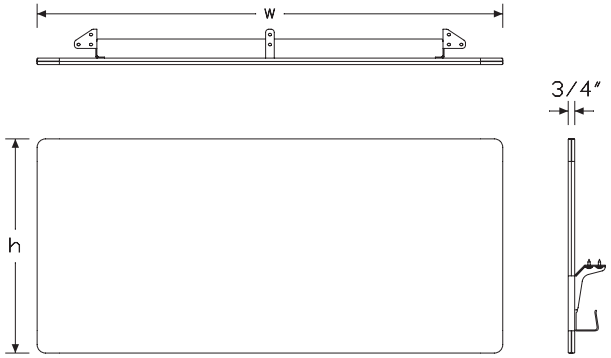

Flat Edge Screen, Surface Attached with Modesty *continued*

Specification Information

Step 1.

FT357.

Step 2. Attachment

C	Canvas surface attached

Step 3. Height

A42	42" high/9" below surface
A46	46" high/ 9" below surface
A53	53" high/ 9" below surface

Step 4. Width

40	39½" wide
42	42" wide
46	45½" wide
48	48" wide
52	51½" wide
54	54" wide
60	60" wide
66	66" wide
72	72" wide

Step 5. Surface Material

For 39½" wide (40), 42" wide (42), 45½" wide (46), or 48" wide (48)

R	tackable fabric, horizontal
T	tackable fabric

For 51½" wide (52), 54" wide (54), 60" wide (60), 66" wide (66), or 72" wide (72)

R	tackable fabric, horizontal

Prices for Steps 1-5.

			40R	40T	42R	42T	46R	46T
FT357.	**C**	**A42**	$656	656	686	686	713	713
		A46	$788	788	841	841	844	844
		A53	$942	942	963	963	968	968

			48R	48T	52R	54R	60R	66R
FT357.	**C**	**A42**	$725	725	758	762	838	860
		A46	$853	853	883	926	938	965
		A53	$976	976	982	989	1003	1089

			72R
FT357.	**C**	**A42**	$921
		A46	$997
		A53	$1124

Step 6. Cable Trough

NC	no cable way	+$0
CW	cable way	+$25

Step 7. Cable Trough Finish

G2	graphite satin	+$0

Step 8. Bracket Finish

G2	graphite satin	+$0

Step 9. Fabric

	40	42	46	48	52
Price Category C	+$230	230	230	230	325
Price Category 1	+$0	0	0	0	0
Price Category 2	+$36	36	36	36	52
Price Category 3	+$86	86	86	86	123
Price Category 4	+$150	150	150	150	214
Price Category E	+$169	169	169	169	169

	54	60	66	72
Price Category C	+$325	325	325	325
Price Category 1	+$0	0	0	0
Price Category 2	+$52	52	52	52
Price Category 3	+$123	123	123	123
Price Category 4	+$214	214	214	214
Price Category E	+$169	169	169	169

Flat Edge Screen, Delineation FT358.

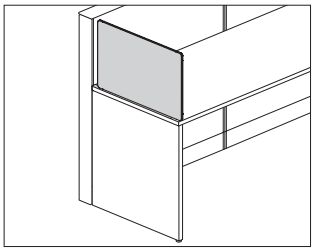

Product Information

Description

This tackable fabric screen attaches to a work surface at the right or left edge to provide division and boundary between workers. It attaches with no interference from supports below the work surface. Attachment hardware included.

Notes

Screen height is 13½″ or 17½″ above work surface, aligning with bead heights of 41″ and 45″.

Screen width matches work surface depths that have a 1″ gap at the back edge.

2 attachment methods ship with the end-of-run right handed (CR) and end-of-run left handed (CL) screen. The screen can be installed using the bracket, or using threaded screws that drill bayonets directly into the surface. See planning guide for exact location of holes.

End-of-run screen does not work on Canvas Beam.

See planning guide for applications and other compatible product lines.

Screen accepts Customer's Own Material (COM). Yardage is estimated for nondirectional 54″-wide fabrics.

For vertical fabric direction (T):

Height—Yardage

42—1.19

46—1.45

For horizontal fabric direction (R):

Width—Yardage

24—0.90

30—1.10

36—1.30

For information on multiple quantities or directional fabrics, contact COM Department. See Order Information in Appendices.

Dimensions

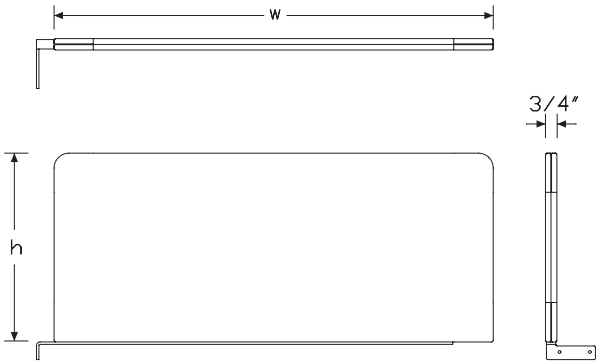

Flat Edge Screen, Delineation

continued

Specification Information
Step 1.
FT358.

Step 2. Attachment Type	
CL	Canvas Surface Attached, End of Run Left Handed
CR	Canvas Surface Attached, End of Run Right Handed

Step 3. Height	
42	42″ high
46	46″ high

Step 4. Width	
24	24″ wide
30	30″ wide
36	36″ wide

Step 5. Surface Material	
R	tackable fabric, horizontal
T	tackable fabric

Prices for Steps 1-5.

			24R	24T	30R	30T	36R	36T
FT358.	**CL**	**42**	$533	533	563	563	574	574
		46	$579	579	614	614	635	635
	CR	**42**	$533	533	563	563	574	574
		46	$579	579	614	614	635	635

Step 6. Bracket Finish		
8Q	folkstone grey	+$0
91	white	+$0
98	studio white	+$0
BK	black	+$0
G1	graphite	+$0
WL	sandstone	+$0
WN	warm grey neutral	+$0

Step 7. Fabric	
Price Category C	+$102
Price Category 1	+$0
Price Category 2	+$17
Price Category 3	+$40
Price Category 4	+$70
Price Category E	+$169

Laminate Screen, Surface Attached

FT360.

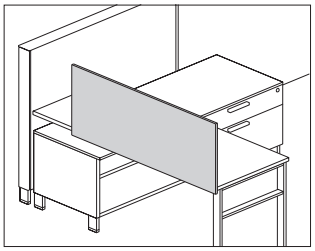

Product Information

Description

This laminate screen attaches to a Canvas work surface to provide boundary. Attachment hardware included.

Notes

Screen widths are actual dimensions; screens extend to the ends of Canvas work surfaces.

Screen extends 4″ below surface to hide attachment hardware.

Screen can be flush with back edge of surface, or provide a 1″ gap.

Screens 48″ wide and wider include an additional 1″-wide center mounting bracket.

Dimensions

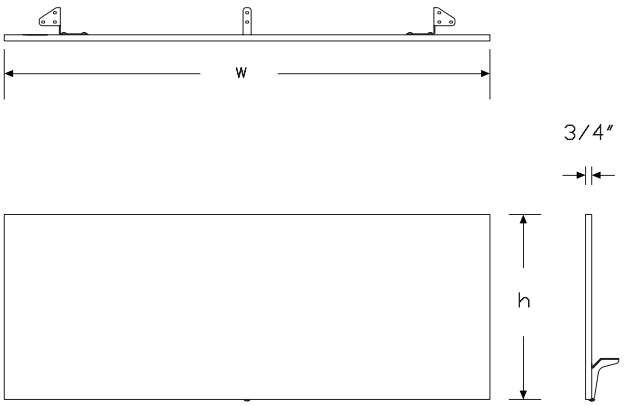

Specification Information

Step 1.

FT360.

Step 2. Attachment

C	Canvas surface attached

Step 3. Height

42	42″ high
46	46″ high

Step 4. Width

39A	39½″ wide
42	42″ wide
45A	45½″ wide
48	48″ wide
51A	51½″ wide
54	54″ wide
60	60″ wide
66	66″ wide
72	72″ wide

Step 5. Surface Material

L	laminate
U	laminate/universal edge

Prices for Steps 1-5.

			39AL	39AU	42L	42U	45AL	45AU
FT360.	**C**	**42**	$365	365	374	374	383	383
		46	$451	451	460	460	469	469

			48L	48U	51AL	51AU	54L	54U
FT360.	**C**	**42**	$393	393	402	402	411	411
		46	$479	479	488	488	498	498

			60L	60U	66L	66U	72L	72U
FT360.	**C**	**42**	$421	421	457	457	480	480
		46	$507	507	546	546	569	569

Step 6. Grain Direction

For 39½″ wide (39A), 42″ wide (42), 45½″ wide (45A), 48″ wide (48), 51½″ wide (51A), 54″ wide (54), or 60″ wide (60)

VTG	vertical grain	+$0
HRG	horizontal grain	+$0

Laminate Screen, Surface Attached *continued*

For 66" wide (66) or 72" wide (72)		
HRG	horizontal grain	+$0

Step 7. Bracket Finish		
G2	graphite satin	+$0

Step 8. Surface Finish		
76	light brown walnut	+$0
8Q	folkstone grey	+$0
91	white	+$0
98	studio white	+$0
CL	cool grey neutral	+$0
HM	natural maple	+$0
HP	light anigre	+$0
HX	aged cherry	+$0
HY	walnut on cherry	+$0
LA	light ash	+$0
LBA	clear on ash	+$0
LBB	oak on ash	+$0
LBC	walnut on ash	+$0
LBD	dark brown walnut	+$0
LBE	medium red walnut	+$0
LBF	neutral twill	+$0
LBG	sarum twill	+$0
LBH	earthen twill	+$0
LBJ	graphite twill	+$0
LBK	pewter mesh	+$0
LBM	crisp linen	+$0
LBN	classic linen	+$0
LBP	casual linen	+$0
LBQ	white twill	+$0
LBR	phantom ecru	+$0
LBS	phantom cocoa	+$0
LBU	medium matte walnut	+$0
LBV	warm grey teak	+$0
LU	soft white	+$0
WL	sandstone	+$0
WN	warm grey neutral	+$0

Step 9. Edge Finish		
For laminate (L)		
76	light brown walnut	+$0
8Q	folkstone grey	+$0
91	white	+$0
98	studio white	+$0
BU	black umber	+$0
CL	cool grey neutral	+$0
HF	inner tone light	+$0
HM	natural maple	+$0
HP	light anigre	+$0
HX	aged cherry	+$0
HY	walnut on cherry	+$0
LA	light ash	+$0
LBA	clear on ash	+$0
LBR	phantom ecru	+$0
LBS	phantom cocoa	+$0
LBU	medium matte walnut	+$0
LBV	warm grey teak	+$0
LBB	oak on ash	+$0
LBC	walnut on ash	+$0
LBD	dark brown walnut	+$0
LBE	medium red walnut	+$0
LBF	neutral twill	+$0
LBG	sarum twill	+$0
LBH	earthen twill	+$0
LBJ	graphite twill	+$0
LBK	pewter mesh	+$0
LBL	steel mesh	+$0
LBM	crisp linen	+$0
LBN	classic linen	+$0
LBP	casual linen	+$0
LBQ	white twill	+$0
LU	soft white	+$0
MT	medium tone	+$0
WL	sandstone	+$0
WN	warm grey neutral	+$0
For laminate/universal edge (U)		
PLY	plywood edge	+$50

Laminate Screen, Surface Attached with Modesty

FT361.

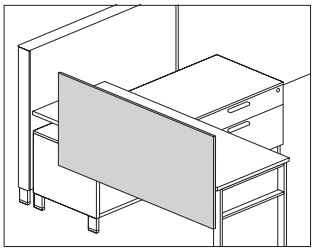

Product Information

Description

This laminate screen attaches to a Canvas work surface to provide boundary and modesty. An optional cable management trough is available. Trough finish is graphite. Attachment hardware included.

Notes

Screen widths are actual dimensions; screens extend to the ends of Canvas work surfaces.

Screen extends 9" below surface for modesty.

Screen can be flush with back edge of surface, or provide a 1" gap.

Screens 48" wide and wider include an additional 1"-wide center mounting bracket.

Dimensions

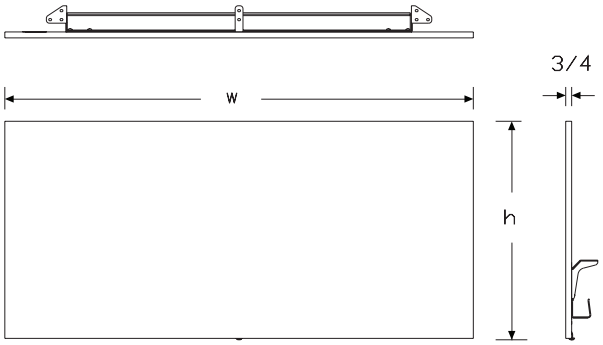

Specification Information

Step 1.

FT361.

Step 2. Attachment

C Canvas surface attached

Step 3. Height

A42 42" high/9" below surface

A46 46" high/ 9" below surface

Step 4. Width

39A 39½" wide

42 42" wide

45A 45½" wide

48 48" wide

51A 51½" wide

54 54" wide

60 60" wide

66 66" wide

72 72" wide

Step 5. Surface Material

L laminate

U laminate/universal edge

Prices for Steps 1-5.

			39AL	39AU	42L	42U	45AL	45AU
FT361.	**C**	**A42**	$395	395	405	405	415	415
		A46	$489	489	500	500	510	510

			48L	48U	51AL	51AU	54L	54U
FT361.	**C**	**A42**	$426	426	436	436	446	446
		A46	$520	520	530	530	540	540

			60L	60U	66L	66U	72L	72U
FT361.	**C**	**A42**	$456	456	490	490	512	512
		A46	$550	550	588	588	608	608

Step 6. Grain Direction

For 39½" wide (39A), 42" wide (42), 45½" wide (45A), 48" wide (48), 51½" wide (51A), 54" wide (54), or 60" wide (60)

VTG	vertical grain	+$0
HRG	horizontal grain	+$0

Laminate Screen, Surface Attached with Modesty *continued*

For 66" wide (66) or 72" wide (72)		
HRG	horizontal grain	+$0

Step 7. Cable Way		
CW	cable way	+$25
NC	no cable way	+$0

Step 8. Cable Way Finish		
For cable way (CW)		
G2	graphite satin	+$0

Step 9. Bracket Finish		
G2	graphite satin	+$0

Step 10. Surface Finish		
76	light brown walnut	+$0
8Q	folkstone grey	+$0
91	white	+$0
98	studio white	+$0
CL	cool grey neutral	+$0
HM	natural maple	+$0
HP	light anigre	+$0
HX	aged cherry	+$0
HY	walnut on cherry	+$0
LA	light ash	+$0
LBA	clear on ash	+$0
LBB	oak on ash	+$0
LBC	walnut on ash	+$0
LBD	dark brown walnut	+$0
LBE	medium red walnut	+$0
LBF	neutral twill	+$0
LBG	sarum twill	+$0
LBH	earthen twill	+$0
LBJ	graphite twill	+$0
LBK	pewter mesh	+$0
LBL	steel mesh	+$0
LBM	crisp linen	+$0
LBN	classic linen	+$0
LBP	casual linen	+$0
LBQ	white twill	+$0
LBR	phantom ecru	+$0
LBS	phantom cocoa	+$0
LBU	medium matte walnut	+$0
LBV	warm grey teak	+$0
LU	soft white	+$0
WL	sandstone	+$0
WN	warm grey neutral	+$0

Step 11. Edge Finish		
For laminate (L)		
76	light brown walnut	+$0
8Q	folkstone grey	+$0
91	white	+$0
98	studio white	+$0
BU	black umber	+$0
CL	cool grey neutral	+$0
HF	inner tone light	+$0
HM	natural maple	+$0
HP	light anigre	+$0
HX	aged cherry	+$0
HY	walnut on cherry	+$0
LA	light ash	+$0
LBA	clear on ash	+$0
LBR	phantom ecru	+$0
LBS	phantom cocoa	+$0
LBU	medium matte walnut	+$0
LBV	warm grey teak	+$0
LBB	oak on ash	+$0
LBC	walnut on ash	+$0
LBD	dark brown walnut	+$0
LBE	medium red walnut	+$0
LBF	neutral twill	+$0
LBG	sarum twill	+$0
LBH	earthen twill	+$0
LBJ	graphite twill	+$0
LBK	pewter mesh	+$0
LBL	steel mesh	+$0
LBM	crisp linen	+$0
LBN	classic linen	+$0
LBP	casual linen	+$0
LBQ	white twill	+$0
LU	soft white	+$0
MT	medium tone	+$0
WL	sandstone	+$0
WN	warm grey neutral	+$0

For laminate/universal edge (U)		
PLY	plywood edge	+$50

Metal Straight Screen, Surface Attached with Modesty YT250.

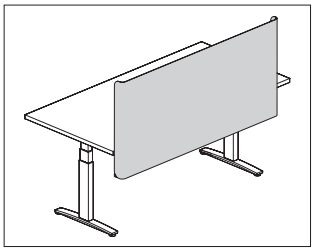

Product Information

Description

This metal screen attaches to an individual table, desk, stationary or height-adjustable work surface. It has a frameless all-metal design with a straight edge and includes a modesty panel. Screen has built-in ledge to support documents when used with the magnetic document clip. Screen accepts magnets. Attachment hardware included.

Notes

Screen top edge is 11.375″ above top of work surface; bottom edge is 3.8″ below work surface.

Recommended mounting creates a 1″ gap between back edge of surface and the screen to accommodate cable routing and the attachment or clamp-mounting of other hardware to the surface.

Attachment brackets are inset from edge of screen by approximately 6½″ and require 2½″ of work surface for attachment.

Attachment bracket finish matches specified screen finish.

Order magnetic document clip (YT400.) separately.

Dimensions

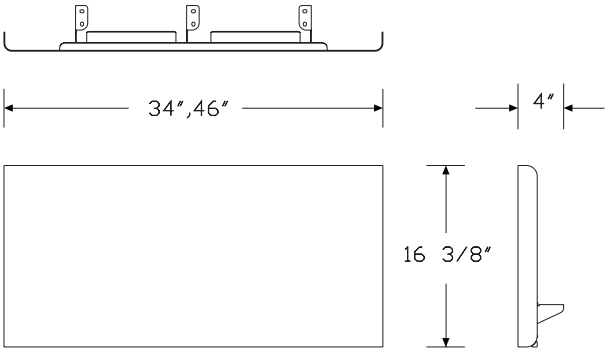

Specification Information

Step 1.

YT250. A

Step 2. Height

A	11″ high	A

Step 3. Width

34	34″ wide	A
46	46″ wide	A

Prices for Steps 1-3.

	34	**46**
YT250. A	$316	337

Step 4. Screen Finish

91	white	A	+$0
G1	graphite	A	+$0
MS	metallic silver	A	+$0

Modesty Panel Y1113.

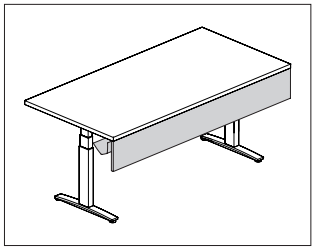

Product Information

Description

This modesty panel attaches to a table, desk, peninsula, or work surface. It has a solid MDF core with a laminate or veneer surface, aluminum top rail and attachment brackets. Cable trough is optional. Attachment hardware included.

Notes

Specify modesty panel to be equal to surface width, or 6″ less than surface width of a height adjustable table.

Modesty panel dimension is approximately 10″ high with width specified in step 1. Actual width 1/4″ less than specified value.

Modesty panel is field installed.

Brackets are located to work with Connect™ 2-circuit power system.

Modesty panel (Y1113.) may impede ideal folding functionality of flip top table (DT5Ax.). For use with flip top table, modesty panel (Y1114.) is recommended. It comes only with a fabric surface.

Dimensions

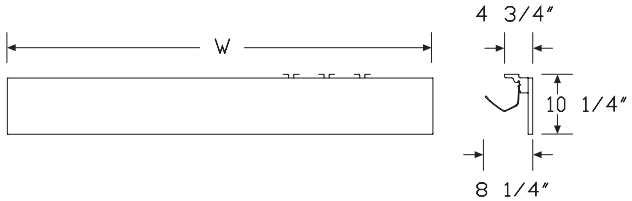

Specification Information

Step 1.

Y1113.

Step 2. Width

24	24″ wide
30	30″ wide
36	36″ wide
42	42″ wide
48	48″ wide
54	54″ wide
60	60″ wide
66	66″ wide
72	72″ wide

Step 3. Cable Trough

N	without added cable trough
Y	with added cable trough

Step 4. Surface Material

L	laminate top/thermoplastic edge
W	veneer top/veneer edge

Prices for Steps 1-4.

			L	W
Y1113.	**24**	**N**	$200	354
		Y	$355	527
	30	**N**	$217	397
		Y	$403	602
	36	**N**	$237	442
		Y	$439	663
	42	**N**	$256	486
		Y	$483	733
	48	**N**	$276	530
		Y	$528	804
	54	**N**	$297	575
		Y	$573	875
	60	**N**	$315	618
		Y	$618	944
	66	**N**	$315	661
		Y	$662	1014
	72	**N**	$342	704
		Y	$705	1084

Step 5. Finish		
For laminate top/thermoplastic edge (L)		
76	light brown walnut	+$0
8Q	folkstone grey	+$0
91	white	+$0
98	studio white	+$0
CL	cool grey neutral	+$0
G1	graphite	+$0
HM	natural maple	+$0
HP	light anigre	+$0
HX	aged cherry	+$0
HY	walnut on cherry	+$0
LA	light ash	+$0
LBA	clear on ash	+$0
LBB	oak on ash	+$0
LBC	walnut on ash	+$0
LBD	dark brown walnut	+$0
LBE	medium red walnut	+$0
LBF	neutral twill	+$0
LBG	sarum twill	+$0
LBH	earthen twill	+$0
LBJ	graphite twill	+$0
LBK	pewter mesh	+$0
LBL	steel mesh	+$0
LBM	crisp linen	+$0
LBN	classic linen	+$0
LBP	casual linen	+$0
LBQ	white twill	+$0
LBR	phantom ecru	+$0
LBS	phantom cocoa	+$0
LBU	medium matte walnut	+$0
LBV	warm grey teak	+$0
LU	soft white	+$0
WL	sandstone	+$0
WN	warm grey neutral	+$0
For veneer top/veneer edge (W)		
2U	light brown walnut	+$0
40	dark brown walnut	+$0
UL	natural maple	+$0

Step 6. Edge Finish		
For laminate top/thermoplastic edge (L)		
76	light brown walnut	+$0
8Q	folkstone grey	+$0
91	white	+$0
98	studio white	+$0
BU	black umber	+$0
CL	cool grey neutral	+$0
G2	graphite satin	+$0
HF	inner tone light	+$0
HM	natural maple	+$0
HP	light anigre	+$0
HT	inner tone	+$0
HX	aged cherry	+$0
HY	walnut on cherry	+$0
LA	light ash	+$0
LBA	clear on ash	+$0
LBB	oak on ash	+$0
LBC	walnut on ash	+$0
LBD	dark brown walnut	+$0
LBE	medium red walnut	+$0
LBF	neutral twill	+$0
LBG	sarum twill	+$0
LBH	earthen twill	+$0
LBJ	graphite twill	+$0
LBK	pewter mesh	+$0
LBL	steel mesh	+$0
LBM	crisp linen	+$0
LBN	classic linen	+$0
LBP	casual linen	+$0
LBQ	white twill	+$0
LBR	phantom ecru	+$0
LBS	phantom cocoa	+$0
LBU	medium matte walnut	+$0
LBV	warm grey teak	+$0
LU	soft white	+$0
MT	medium tone	+$0
WL	sandstone	+$0
WN	warm grey neutral	+$0

Pari Screen, Surface Attached with Modesty

FT353.

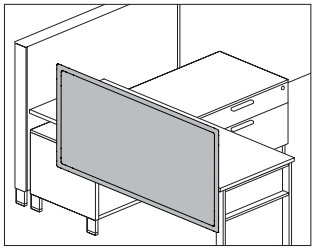

Product Information

Description

This tackable fabric screen attaches to a Canvas work surface to provide boundary and modesty with a tackable surface. An optional cable management trough is available. Trough finish is graphite. Attachment hardware included.

Notes

Screen widths are actual dimensions, and extend to the end of Canvas work surfaces.

Screen extends 10" below surface for modesty.

Screen can be flush with back edge of surface, or provide a 1" gap.

Screens 48" wide and wider include an additional 1"-wide center mounting bracket.

Screen accepts Customer's Own Material (COM). Yardage is estimated for nondirectional 54"-wide fabrics.

For vertical fabric direction (T):

Height—Yardage

42—1.90

46—2.14

53—2.59

For horizontal fabric direction (R):

Width—Yardage

40—2.87

42—3.02

46—3.22

48—3.41

52—3.63

54—3.78

60—4.17

66—4.54

72—4.92

For information on multiple quantities or directional fabrics, contact COM Department. See Order Information in Appendices.

Dimensions

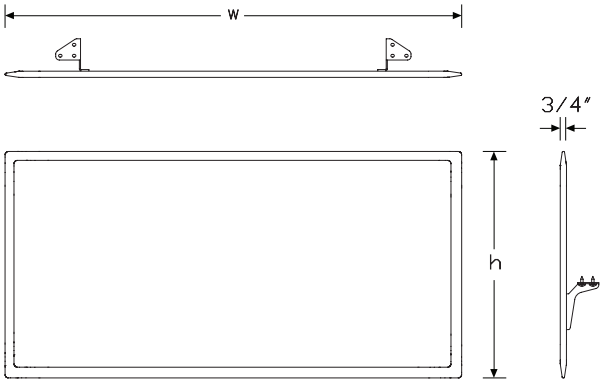

Pari Screen, Surface Attached with Modesty *continued*

Specification Information

Step 1.

FT353. A

Step 2. Attachment

C Canvas surface attached A

Step 3. Height

A42 42" high/10" below surface A
A46 46" high/10" below surface A
A53 53" high/10" below surface A

Step 4. Width

40 39½" wide A
42 42" wide A
46 45½" wide A
48 48" wide A
52 51½" wide A
54 54" wide A
60 60" wide A
66 66" wide A
72 72" wide A

Step 5. Surface Material

For 39½" wide (40), 42" wide (42), 45½" wide (46), or 48" wide (48)

R tackable fabric, horizontal A
T tackable fabric A

For 51½" wide (52)

R tackable fabric, horizontal A

For 54" wide (54), 60" wide (60), 66" wide (66), or 72" wide (72)

R tackable fabric, horizontal A

Prices for Steps 1-5.

		40R	40T	42R	42T	46R	46T
FT353. C	**A42**	$891	891	921	921	1013	1013
	A46	$1024	1024	1081	1081	1126	1126
	A53	$1178	1178	1198	1198	1275	1275

		48R	48T	52R	54R	60R	66R
FT353. C	**A42**	$1024	1024	1128	1152	1178	1270
	A46	$1162	1162	1206	1218	1290	1357
	A53	$1290	1290	1320	1337	1382	1499

		72R
FT353. C	**A42**	$1305
	A46	$1389
	A53	$1527

Step 6. Cable Trough

NC no cable way A +$0
CW cable way A +$25

Step 7. Cable Trough Finish

G2 graphite satin A +$0

Step 8. Bracket Finish

G2 graphite satin A +$0

Step 9. Fabric

	40	42	46	48	52
Price Category C	+$223	223	223	223	307
Price Category 1	+$0	0	0	0	0
Price Category 2	+$36	36	36	36	52
Price Category 3	+$86	86	86	86	123
Price Category 4	+$150	150	150	150	214
Price Category E	+$169	169	169	169	169

	54	60	66	72
Price Category C	+$307	307	381	381
Price Category 1	+$0	0	0	0
Price Category 2	+$52	52	64	64
Price Category 3	+$123	123	154	154
Price Category 4	+$214	214	267	267
Price Category E	+$169	169	169	169

Pari Screen, Surface Attached FT351.

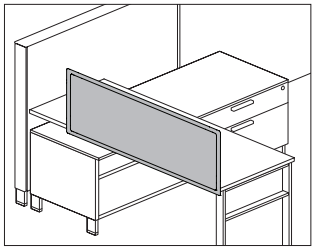

Product Information

Description

This tackable fabric screen attaches to a Canvas work surface to provide boundary with a tackable surface. Attachment hardware included.

Notes

Screen widths are actual dimensions, and extend to the end of Canvas work surfaces.

Screen extends 4" below surface to hide attachment hardware.

Screen can be flush with back edge of surface, or provide a 1" gap.

Screens 48" wide and wider include an additional 1"-wide center mounting bracket.

Screen accepts Customer's Own Material (COM). Yardage is estimated for nondirectional 54"-wide fabrics.

For vertical fabric direction (T):

Height—Yardage

42—1.49

46—1.73

53—2.18

For horizontal fabric direction (R):

Width—Yardage

40—1.34

42—1.51

46—1.62

48—1.71

52—1.81

54—1.90

60—2.07

66—2.27

72—2.46

For information on multiple quantities or directional fabrics, contact COM Department. See Order Information in Appendices.

Dimensions

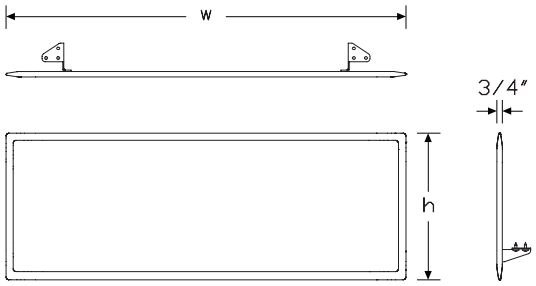

Specification Information

Step 1.

FT351. A

Step 2. Attachment

C Canvas surface attached A

Step 3. Height

42 42" high A
46 46" high A
53 53" high A

Step 4. Width

40 39½" wide A
42 42" wide A
46 45½" wide A
48 48" wide A
52 51½" wide A
54 54" wide A
60 60" wide A
66 66" wide A
72 72" wide A

Step 5. Surface Material

For 39½" wide (40), 42" wide (42), 45½" wide (46), or 48" wide (48)

R tackable fabric, horizontal A
T tackable fabric A

For 51½" wide (52)

R tackable fabric, horizontal A

For 54" wide (54), 60" wide (60), 66" wide (66), or 72" wide (72)

R tackable fabric, horizontal A

Prices for Steps 1-5.

			40R	40T	42R	42T	46R	46T
FT351.	**C**	**42**	$783	783	810	810	820	820
		46	$846	846	878	878	921	921
		53	$1024	1024	1106	1106	1152	1152

			48R	48T	52R	54R	60R	66R
FT351.	**C**	**42**	$835	835	903	924	988	1060
		46	$968	968	1034	1060	1137	1198
		53	$1167	1167	1218	1234	1255	1290

Pari Screen, Surface Attached

continued

		72R
FT351. C	**42**	$1116
	46	$1244
	53	$1315

Step 6. Bracket Finish		
G2	graphite satin A	+$0

Step 7. Fabric

	40	42	46	48	52
Price Category C	+$139	139	139	139	195
Price Category 1	+$0	0	0	0	0
Price Category 2	+$23	23	23	23	27
Price Category 3	+$54	54	54	54	65
Price Category 4	+$94	94	94	94	113
Price Category E	+$234	234	234	234	234

	54	60	66	72
Price Category C	+$195	195	195	195
Price Category 1	+$0	0	0	0
Price Category 2	+$27	27	33	33
Price Category 3	+$65	65	78	78
Price Category 4	+$113	113	135	135
Price Category E	+$234	234	234	234

Logic Mini Y1414.

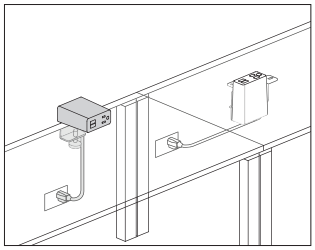

Product Information

Description

This electrical distributor plugs directly into floor, wall, or ceiling drop outlets. Each module configuration presents the same visual appearance. Cable clips and attachment hardware included. Product is UL listed.

Notes

Cable clips for cord management are intended for a 1-time installation.

Clamp versions can be reoriented in the field by a technician.

A small LED light illuminates through the USB ports when the USB version is plugged in and powered.

USB ports provide 10-watt power to charge most devices and tablets at full speed.

Cord color is predetermined. For white (91) finish cords will be white. For graphite (G1) finish cords will be black.

Grommet mount attachment (Y1414.xxxG) does not come with the mini grommet. Order Logic mini grommet (Y1412.) separately, as needed.

Dimensions

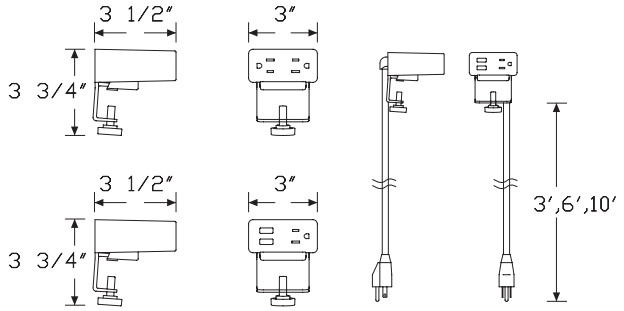

Surface Clamp

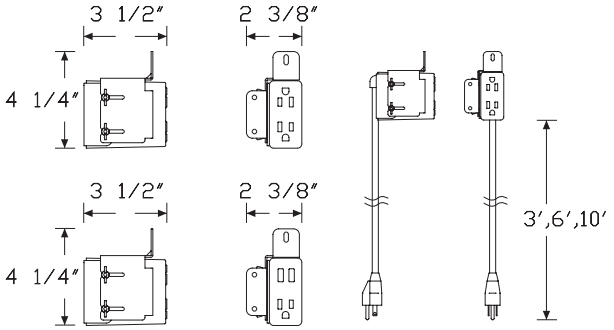

Grommet Mount

Specification Information

Step 1.

Y1414. A

Step 2. Configuration

J	1 simplex receptacles, 2 powered USB A
K	2 simplex receptacles A

Step 3. Cord/Conduit Length

03	3′ cord/conduit A
06	6′ cord/conduit A
10	10′ cord/conduit A

Step 4. Attachment

G	grommet mount A
S	surface clamp A

Prices for Steps 1-4.

			G	S
Y1414.	**J**	**03**	$356	356
		06	$356	356
		10	$366	366
	K	**03**	$199	199
		06	$199	199
		10	$209	209

Step 5. Finish

BK	black A	+$0
91	white A	+$0
98	studio white A	+$0
G1	graphite A	+$0

Logic Mini - Vine Y1415.

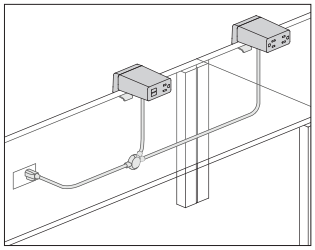

Product Information

Description

This electrical distributor plugs directly into floor, wall, or ceiling drop outlets. Each module configuration presents the same visual appearance. Cable clips and attachment hardware included. Product is ETL listed to UL962.

Notes

Cable clips for cord management are intended for a 1-time installation.

Clamp versions can be reoriented in the field by a technician.

Jumper length denotes distance between center points of each split point.

Cord length denotes distance from plug end to first split point.

All branch lengths from main power cord to module are 12".

A small LED light illuminates through the USB ports when the USB version is plugged in and powered.

USB ports provide 10-watt power to charge most devices and tablets at full speed.

The cord head contains a circuit breaker when there are more than 3 simplex receptacles.

Grommet mount attachment (Y1415.xxxxG) does not come with the mini grommet. Order Logic mini grommet (Y1412.) separately, as needed.

Dimensions

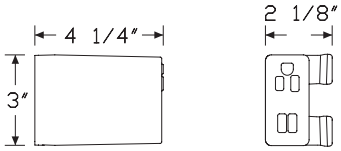

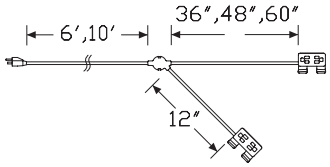

Two Power Modules

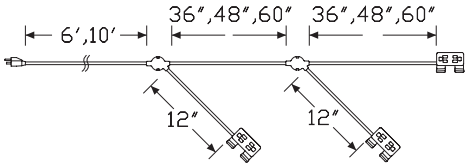

Three Power Modules

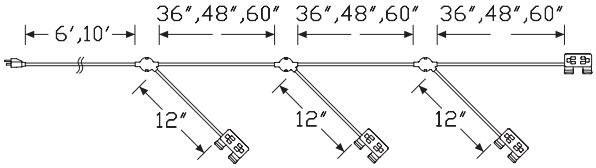

Four Power Modules

Specification Information

Step 1.

Y1415. A

Step 2. Number of Modules

2	two power modules A
3	three power modules A
4	four power modules A

Step 3. Power Type

J	1 simplex receptacles, 2 powered USB, all modules A
K	2 simplex receptacles, all modules A
L	first module has 1 AC plus 2 powered USB all other modules have all AC simplexes A

Step 4. Jumper Length

36	36″ between split points A
48	48″ between split points A
60	60″ between split points A

Step 5. Attachment

G	grommet mount A
S	surface clamp A

Step 6. Cord/Conduit Length

06	6′ cord/conduit A
10	10′ cord/conduit A

Prices for Steps 1-6.

			36G06	36G10	36S06	36S10	48G06	48G10
Y1415.	**2**	**J**	$787	798	787	798	796	807
		K	$471	483	471	483	480	491
		L	$629	640	629	640	638	650
	3	**J**	$1173	1183	1173	1183	1190	1201
		K	$715	728	715	728	735	745
		L	$875	885	875	885	891	903
	4	**J**	$1592	1604	1592	1604	1618	1630
		K	$961	971	961	971	988	998
		L	$1119	1130	1119	1130	1145	1155

			48S06	48S10	60G06	60G10	60S06	60S10
Y1415.	**2**	**J**	$796	807	805	817	805	817
		K	$480	491	489	500	489	500
		L	$638	650	648	658	648	658
	3	**J**	$1190	1201	1208	1218	1208	1218
		K	$735	745	751	761	751	761
		L	$891	903	910	920	910	920
	4	**J**	$1618	1630	1656	1667	1656	1667
		K	$988	998	1012	1025	1012	1025
		L	$1145	1155	1171	1182	1171	1182

Step 7. Finish

91	white A	+$0
98	studio white A	+$0
BK	black A	+$0
G1	graphite A	+$0

Logic C1000 Universal Clamp Mount Distributor

Y1423.

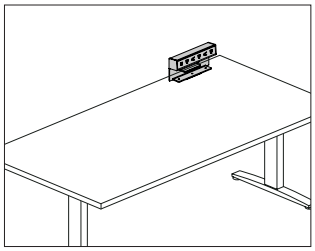

Product Information

Description

This Logic Power Access Solutions™ clamp mounted electrical distributor comes in several widths and configurations of simplex receptacles and USB charging ports. The unit is powered using a standard power cord with plug end or a hard-wired connection with electrical conduit. Data cords can be routed through the integrated opening at the rear of the unit. Product is UL listed.

Notes

Clamp mounts on worksurfaces 1"-1$^1/_4$" thick.

Faceplate color matches unit color.

Simplex receptacles have alternating orientation and greater than normal plug spacing to accommodate most plug types.

USB ports supply 10-watt power and will charge most small electronic devices. Software in each device controls that devices ability to accept a charge via USB.

Dimensions

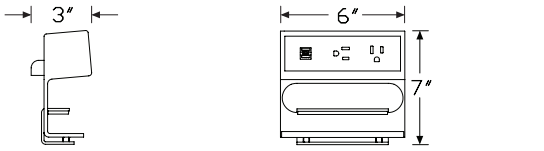

2 simplex receptacles, 2 powered USB

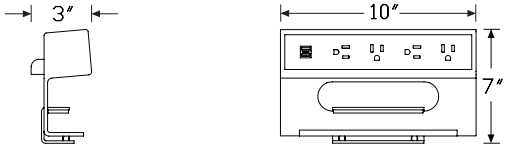

4 simplex receptacles, 2 powered USB

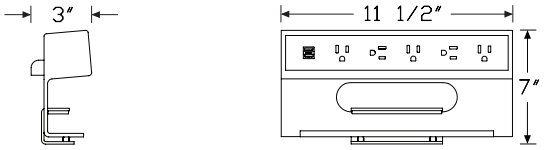

5 simplex receptacles, 2 powered USB

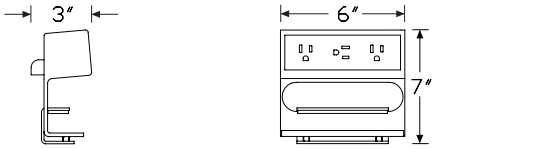

3 simplex receptacles

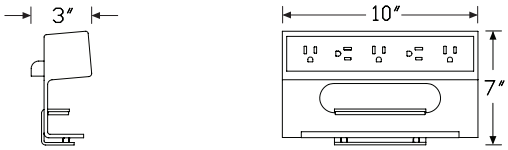

5 simplex receptacles

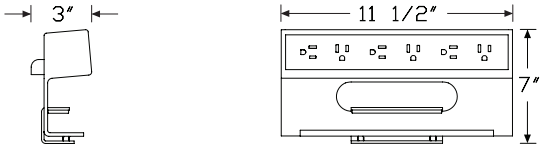

6 simplex receptacles

Logic C1000 Universal Clamp Mount Distributor *continued*

Specification Information

Step 1.

Y1423. A

Step 2. Configuration

A	2 simplex receptacles, 2 powered USB A
C	4 simplex receptacles, 2 powered USB A
D	5 simplex receptacles, 2 powered USB A
E	3 simplex receptacles A
F	5 simplex receptacles A
G	6 simplex receptacles A

Step 3. Power Type

A	power cord with plug end A
B	conduit with open end, for hard-wiring A

Step 4. Cord/Conduit Length

03	3′ cord/conduit A
06	6′ cord/conduit A
10	10′ cord/conduit A

Prices for Steps 1-4.

			03	06	10
Y1423.	**A**	**A**	$480	480	491
		B	$533	533	543
	C	**A**	$577	577	587
		B	$629	629	640
	D	**A**	$617	617	628
		B	$670	670	681
	E	**A**	$322	322	333
		B	$376	376	386
	F	**A**	$420	420	430
		B	$471	471	483
	G	**A**	$459	459	470
		B	$512	512	524

Step 5. Finish

91	white A	+$0
98	studio white A	+$0
BK	black A	+$0
G1	graphite A	+$0
MS	metallic silver A	+$0

Logic G1000 Grommet Mounted Electrical Distributor

Y1425.

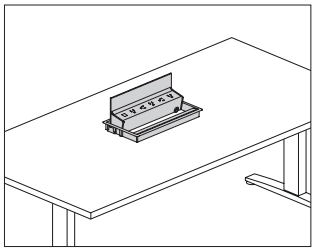

Product Information

Description

This Logic Power Access Solutions™ grommet mounted electrical distributor comes in several widths and configurations of simplex receptacles and USB charging ports. The unit is powered using a standard power cord with plug end, a hard-wired connection with electrical conduit, or an IEC connector when used with Renew™ Sit-to-Stand tables. An integrated cord keeper at the face of the unit captures data cords. The unit pivots from a closed position to 135° allowing easy access to power and data cords stored beneath the unit. Product is UL listed.

Notes

Field cutting of grommet cutout is possible.

IEC connector for Renew power type (C) includes short cord designed to connect to the Renew table power cord through-leg option. Actual cord length may vary.

Simplex receptacles have alternating orientation and greater than normal plug spacing to accommodate most plug types.

USB ports supply 10-watt power and will charge most small electronic devices. Software in each device controls that devices ability to accept a charge via USB.

Refer to Renew™ Sit-to-Stand Tables and Locale® planning guides for specific application information.

20′ cord/conduit length (20) is recommended for Exclave® applications.

Dimensions

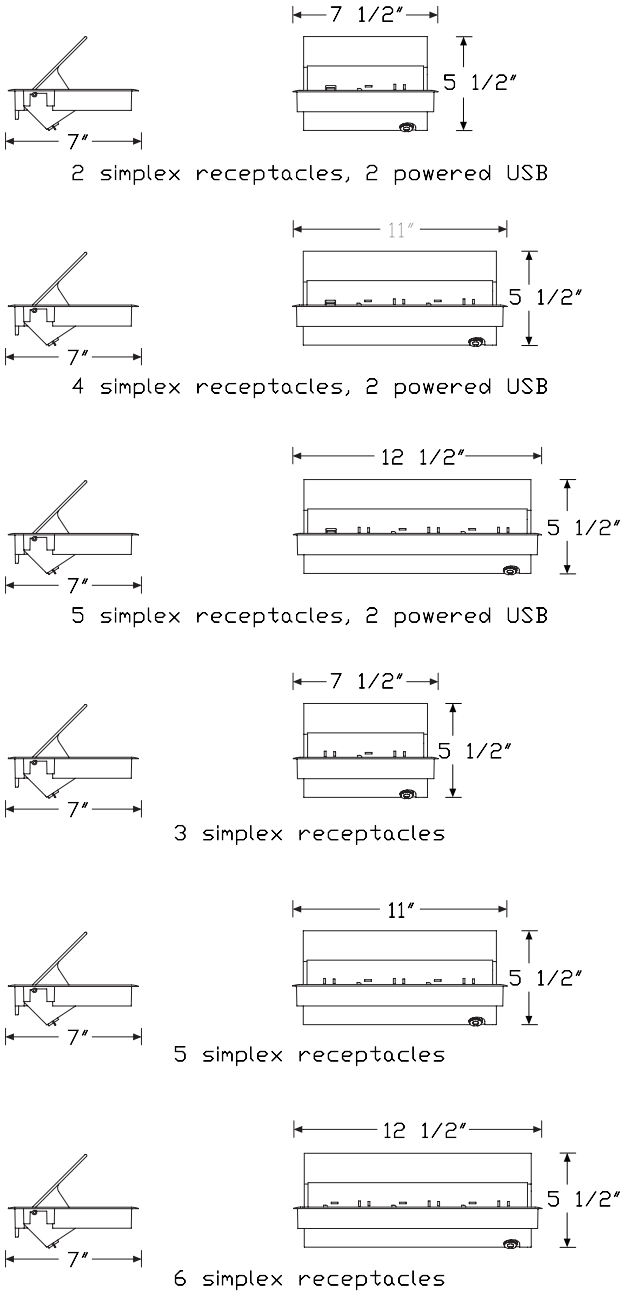

Logic G1000 Grommet Mounted Electrical Distributor *continued*

Specification Information

Step 1.

Y1425. A

Step 2. Configuration

A	2 simplex receptacles, 2 powered USB A
C	4 simplex receptacles, 2 powered USB A
D	5 simplex receptacles, 2 powered USB A
E	3 simplex receptacles A
F	5 simplex receptacles A
G	6 simplex receptacles A

Step 3. Power Type

A	power cord with plug end A
B	conduit with open end, for hard-wiring A
C	IEC connector for Renew Tables A

Step 4. Cord/Conduit Length

For power cord with plug end (A)

03	3′ cord/conduit A
06	6′ cord/conduit A
10	10′ cord/conduit A
20	20′ cord/conduit A

For conduit with open end, for hard-wiring (B)

03	3′ cord/conduit A
06	6′ cord/conduit A
10	10′ cord/conduit A

For IEC connector for Renew Tables (C)

03	3′ cord/conduit A

Prices for Steps 1-4.

			03	06	10	20
Y1425. A		**A**	$683	683	694	705
		B	$737	737	747	—
		C	$694	—	—	—
	C	**A**	$792	792	804	816
		B	$845	845	857	—
		C	$804	—	—	—
	D	**A**	$863	863	875	885
		B	$916	916	926	—
		C	$875	—	—	—
	E	**A**	$526	526	536	546
		B	$578	578	589	—
		C	$536	—	—	—
	F	**A**	$634	634	647	657
		B	$688	688	699	—
		C	$647	—	—	—
	G	**A**	$705	705	715	728
		B	$757	757	770	—
		C	$715	—	—	—

Step 5. Finish

91	white A	+$0
98	studio white A	+$0
BK	black A	+$0
G1	graphite A	+$0
MS	metallic silver A	+$0

Logic Mini Grommet Y1412.

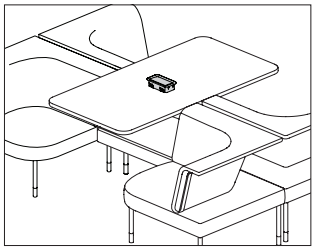

Product Information

Description

This Logic Power Access Solutions™ plastic grommet is available in mini rectangle or mini square configuration. The integrated flaps can hide the things below the surface while also retaining power and data cords.

Notes

This grommet is installed in some HermanMiller applications. Verify your application before ordering grommet separately.

Dimensions

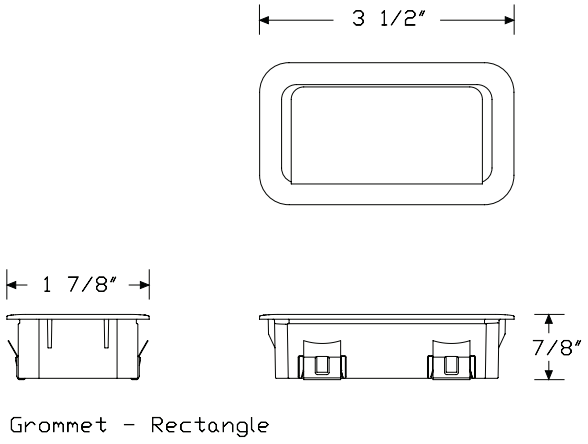

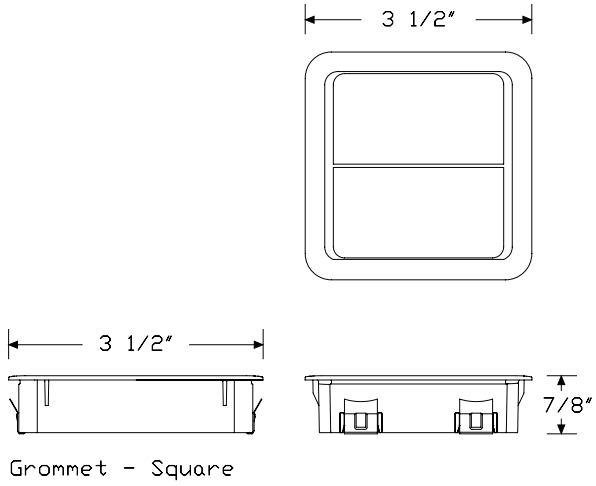

Specification Information

Step 1.

Y1412.

Step 2. Configuration

1	mini rectangle grommet	
2	mini square grommet	

Prices for Steps 1-2.

Y1412.	**1**	$28
	2	$32

Step 3. Finish

91	white	+$0
98	studio white	+$0
BK	black	+$0
G1	graphite	+$0

Logic G1200 Grommet Pass Thru Y1420.

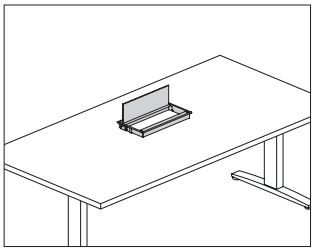

Product Information

Description

This Logic Power Access Solutions™ grommet mounted metal enclosure provides access to cords kept beneath the surface. The unit has an integrated cord keeper.

Notes

Unit size is based on the grommet mounted electrical distributor (Y1425.) with simplex receptacles.

Dimensions

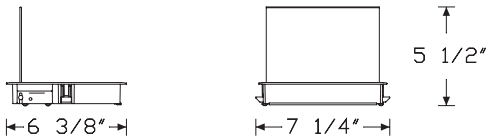

3 outlet opening (T)

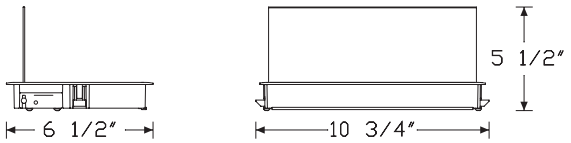

5 outlet opening (V)

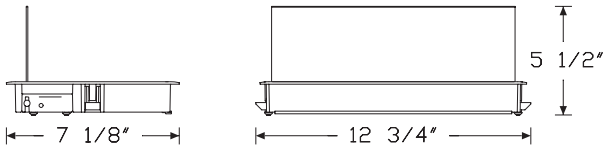

6 outlet opening (X)

Specification Information

Step 1.

Y1420. A

Step 2. Configuration

T	three outlet opening A	
V	five outlet opening A	
X	six outlet opening A	

Prices for Steps 1-2.

Y1420.	**T**	$229
	V	$251
	X	$274

Step 3. Finish

91	white A	+$0
98	studio white A	+$0
BK	black A	+$0
G1	graphite A	+$0
MS	metallic silver A	+$0

Conference Table HD Trough DT9C.

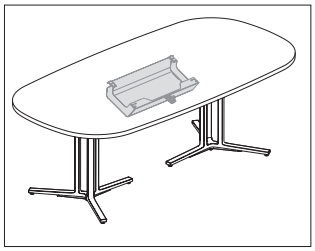

Product Information

Description

This stand-alone painted steel cable management tray mounts to the underside of most conference table surfaces. It can be used with an in-surface grommet mounted unit, providing cord storage under the surface. The tray drops down for access to cords and can be easily stowed back in place.

Notes

Trough widths are optimized to fit on 60″-, 72″-, or 84″-wide tables.
Actual trough widths are:
Table Width—Trough Width

- 60″—24″
- 72″—30″
- 84″—42″

Dimensions

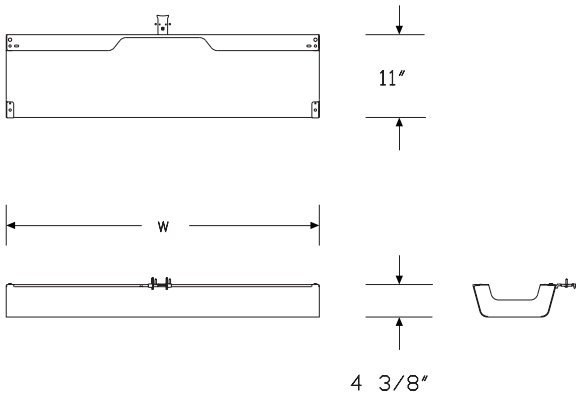

Specification Information

Step 1.

DT9C.

Step 2. Table Width

60	60″ wide
72	72″ wide
84	84″ wide

Prices for Steps 1-2.

DT9C.	**60**	$315
	72	$315
	84	$315

Step 3. Finish

Metallic Paint

CN	metallic champagne	+$0
EH	metallic bronze	+$0
MS	metallic silver	+$0

Sand Texture Paint

BK	black	+$0

Smooth Paint

8Q	folkstone grey	+$0
91	white	+$0
98	studio white	+$0
BU	black umber	+$0
CL	cool grey neutral	+$0
G2	graphite satin	+$0
HF	inner tone light	+$0
LU	soft white	+$0
MT	medium tone	+$0
SG	slate grey	+$0
WL	sandstone	+$0
WN	warm grey neutral	+$0

Logic HD Cable Manager Y1424.

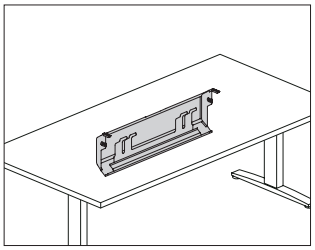

Product Information

Description

This Logic Power Access Solutions™ stand-alone cable management tray mounts to the underside of most surfaces. It can be used with a Logic unit for cord storage, or used alone with cords routed through the back side of the unit. Tray drops down and holds cords in place while working and can be easily stowed back in place.

Dimensions

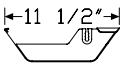

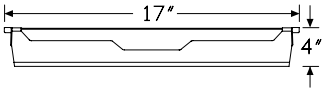

Specification Information

Step 1.

Y1424. A

Step 2. Size

17	17″ wide tray A	

Prices for Steps 1-2.

Y1424. 17		$251

Step 3. Finish

91	white A	+$0
98	studio white A	+$0
BK	black A	+$0
G1	graphite A	+$0
MS	metallic silver A	+$0

Connect™-S100 Y1321.

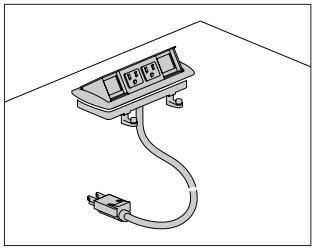

Product Information

Description

This electrical distributor mounts flush in a surface and has a one-touch pop-up mechanism for accessing power and data. It has 2 simplex receptacles and 2 data openings, and is available with a power cord with plug end, or electrical conduit for hardwire connection. A voice/data adapter kit is included, allowing the data openings to accept various manufacturers' couplers and jacks. Attachment hardware and cord/cable clips are also included. Product is UL listed.

Notes

Field cutting of surface may be required. Information on surface cutout size is included on instruction sheet.

Dimensions

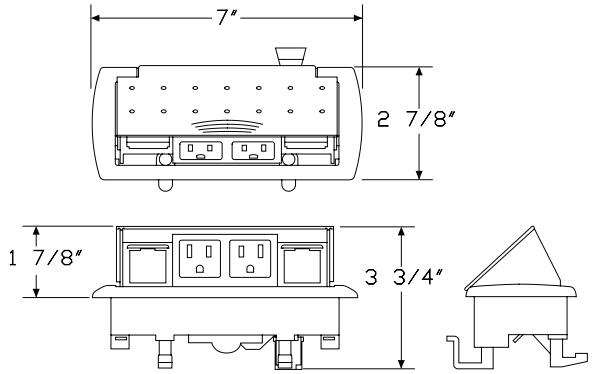

Specification Information

Step 1.

Y1321.

Step 2. Power Type

A	power cord with plug end
B	conduit with open end, for hard-wiring

Step 3. Cord/Conduit Length

03	3′ cord/conduit
06	6′ cord/conduit
10	10′ cord/conduit
20	20′ cord/conduit

Prices for Steps 1-3.

		03	06	10	20
Y1321.	**A**	$216	216	226	278
	B	$273	273	283	334

Step 4. Wiring Type

4Z	standard	+$0

Step 5. Finish

0H	black	+$0

Connect™-S200 Y1322.

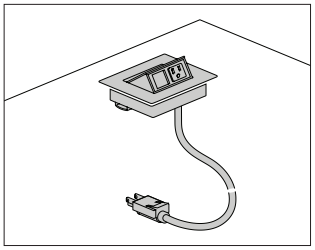

Product Information

Description

This electrical distributor mounts flush in a surface and has a one-touch pop-up mechanism for accessing power and data. It can be configured with 2 simplex receptacles, or 1 simplex receptacle and 1 data opening. The distributor is available with a power cord with plug end, or electrical conduit for hardwire connection. A voice/data adapter kit is included, allowing the data openings to accept various manufacturers' couplers and jacks. Attachment hardware and cord/cable clips are also included. Product is UL listed.

Notes

Field cutting of surface may be required. Information on surface cutout size is included on instruction sheet.

Distributor with PVC-free wiring option (LZ) is Cradle to Cradle Silver Certified.

Distributor with silver finish option (0I) or white finish option (0J) and standard wiring (4Z) has painted metal trim with white plastic simplex/data interior. Distributor with black finish option (0H) and standard wiring (4Z) has black painted trim with black plastic simplex/data interior. Distributor with PVC-free wiring option (LZ) has black plastic simplex/data interior, regardless of the finish color.

Dimensions

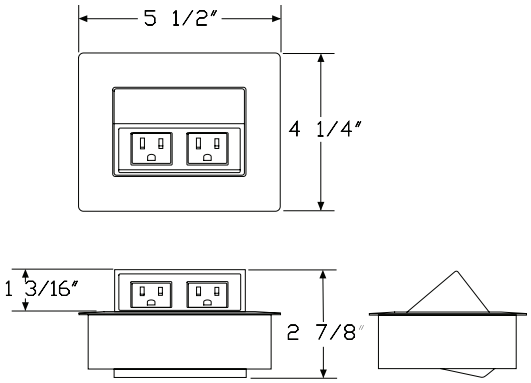

Specification Information

Step 1.

Y1322.

Step 2. Configuration

1	1 simplex receptacle, 1 data opening
2	2 simplex receptacles

Step 3. Power Type

A	power cord with plug end
B	conduit with open end, for hard-wiring

Step 4. Cord/Conduit Length

03	3′ cord/conduit
06	6′ cord/conduit
10	10′ cord/conduit
20	20′ cord/conduit

Prices for Steps 1-4.

			03	06	10	20
Y1322.	**1**	**A**	$257	257	267	318
		B	$313	313	322	372
	2	**A**	$273	273	283	334
		B	$327	327	339	391

Step 5. Wiring Type

4Z	standard	+$0
LZ	PVC-free	+$39

Step 6. Finish

0H	black	+$0
0I	silver	+$0
0J	white	+$0

Connect™-S300 Y1323.

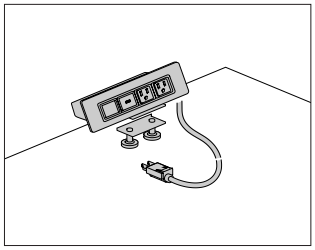

Product Information

Description

This electrical distributor can grommet-mount flush in a surface, or clamp-mount to the edge. It can be configured with several combinations of simplex receptacles, data openings, and USB charging ports. The distributor is available with a power cord with plug end, or electrical conduit for hardwire connection. A voice/data adapter kit is included, allowing the data openings to accept various manufacturers' couplers and jacks. Attachment hardware and cord/cable clips are also included. Product is UL listed.

Notes

Field cutting of surface may be required. Information on surface cutout size is included on instruction sheet.

Silver option (0l) and white option (0J) have painted metal trim with white plastic simplex/data interiors. Black option (0H) has black painted trim with black plastic simplex/data interior.

Overall width for distributor with 4 openings is 8″ wide. Overall width for distributor with 6 openings is 11″ wide.

USB port charges at 2.1 amps.

Dimensions

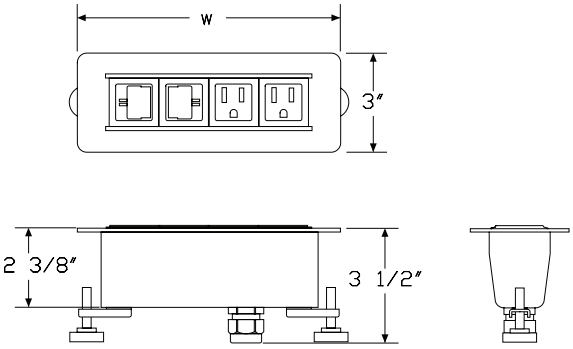

Specification Information

Step 1.

Y1323.

Step 2. Configuration

3	2 simplex receptacles, 2 data openings
4	3 simplex receptacles, 3 data openings
5	2 simplex receptacles, 1 data opening, 1 charging USB port
6	3 simplex receptacles, 2 data opening, 1 charging USB port

Step 3. Power Type

A	power cord with plug end
B	conduit with open end, for hard-wiring

Step 4. Cord/Conduit Length

03	3′ cord/conduit
06	6′ cord/conduit
10	10′ cord/conduit
20	20′ cord/conduit

Step 5. Attachment

G	grommet mount
S	surface clamp

Prices for Steps 1-5.

			03G	03S	06G	06S	10G	10S
Y1323.	**3**	**A**	$294	294	294	294	304	304
		B	$350	350	350	350	360	360
	4	**A**	$366	366	366	366	375	375
		B	$424	424	424	424	434	434
	5	**A**	$411	411	411	411	422	422
		B	$468	468	468	468	477	477
	6	**A**	$483	483	483	483	495	495
		B	$541	541	541	541	551	551

			20G	20S
Y1323.	**3**	**A**	$355	355
		B	$409	409
	4	**A**	$429	429
		B	$483	483
	5	**A**	$473	473
		B	$549	549
	6	**A**	$545	545
		B	$624	624

Step 6. Finish		
0H	black	+$0
0I	silver	+$0
0J	white	+$0

Connect™-S400 Y1324.

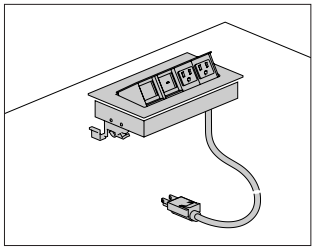

Product Information

Description

This electrical distributor mounts flush in a surface and has a one-touch pop-up mechanism for accessing power and data. It can be configured with several combinations of simplex receptacles, data openings, and USB charging ports. The distributor is available with a power cord with plug end, or electrical conduit for hardwire connection. A voice/data adapter kit is included, allowing the data openings to accept various manufacturers' couplers and jacks. Attachment hardware and cord/cable clips are also included. Product is UL listed.

Notes

Field cutting of surface may be required. Information on surface cutout size is included on instruction sheet.

Distributor with PVC-free wiring option (LZ) is Cradle to Cradle Silver Certified.

Distributor with silver anodized finish option (oK) and standard wiring (4Z) has anodized trim with white plastic simplex/data interior. Distributor with silver anodized finish option (oK) and PVC-free wiring (LZ) has anodized trim with black plastic simplex/data interior.

Overall width for distributor with openings is 8¼" wide. Overall width for distributor with 7 openings is 12¾" wide.

USB port charges at 2.1 amps.

Dimensions

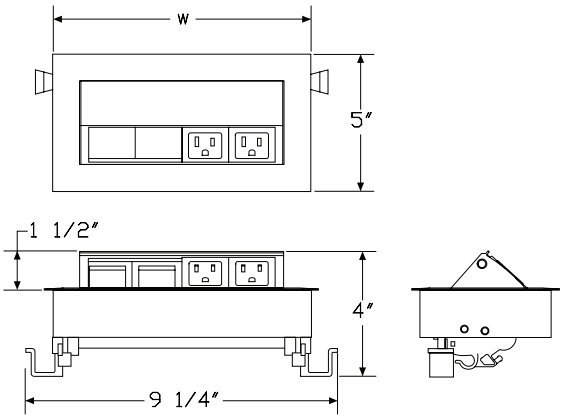

Specification Information

Step 1.

Y1324.

Step 2. Configuration

3	2 simplex receptacles, 2 data openings
5	3 simplex receptacles, 4 data openings
6	2 simplex receptacles, 1 data opening, 1 charging USB port
7	3 simplex receptacles, 3 data opening, 1 charging USB port
8	3 simplex receptacles, 2 data opening, 2 charging USB ports

Step 3. Power Type

A	power cord with plug end
B	conduit with open end, for hard-wiring

Step 4. Cord/Conduit Length

03	3' cord/conduit
06	6' cord/conduit
10	10' cord/conduit
20	20' cord/conduit

Prices for Steps 1-4.

			03	06	10	20
Y1324.	**3**	**A**	$409	409	420	471
		B	$466	466	477	528
	5	**A**	$527	527	537	587
		B	$583	583	589	639
	6	**A**	$528	528	537	587
		B	$584	584	595	647
	7	**A**	$644	644	655	706
		B	$701	701	708	758
	8	**A**	$762	762	771	824
		B	$819	819	826	876

Step 5. Wiring Type

4Z	standard	+$0
LZ	PVC-free	+$39

Step 6. Finish

0K	silver anodized	+$0

Connect™-S500 Y1325.

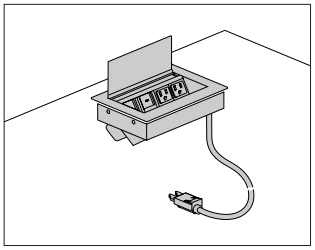

Product Information

Description

This electrical distributor mounts flush in a surface and has a flip-up lid for accessing power and data from above or below the surface. The flip lid can be closed once devices are connected for a clean visual appearance. It can be configured with several combinations of simplex receptacles, data openings, and USB charging ports. The distributor is available with a power cord with plug end, or electrical conduit for hardwire connection. A voice/data adapter kit is included, allowing the data openings to accept various manufacturers' couplers and jacks. Attachment hardware and cord/cable clips are also included. Product is UL listed.

Notes

Field cutting of surface may be required. Information on surface cutout size is included on instruction sheet.

Silver anodized option (oK) has anodized trim with white plastic simplex/data interior.

Overall width for distributor with 4 openings is 8 3/8" wide. Overall width for distributor with 6 openings is 11 3/8" wide.

USB port charges at 2.1 amps.

Dimensions

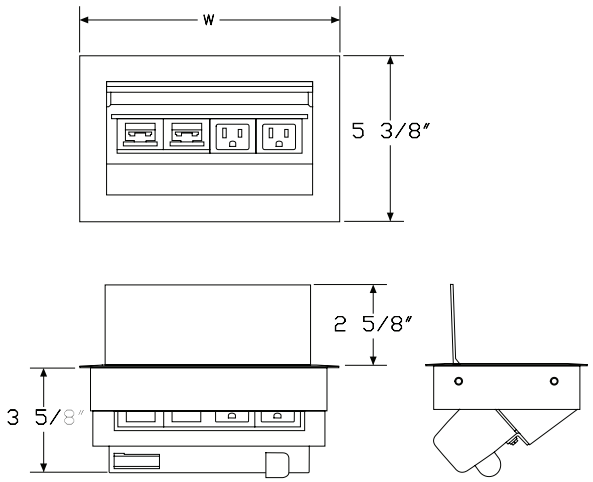

Specification Information

Step 1.

Y1325.

Step 2. Configuration

3	2 simplex receptacles, 2 data openings
7	3 simplex receptacles, 3 data openings
5	2 simplex receptacles, 1 data opening, 1 charging USB port
6	3 simplex receptacles, 2 data opening, 1 charging USB port

Step 3. Power Type

A	power cord with plug end
B	conduit with open end, for hard-wiring

Step 4. Cord/Conduit Length

03	3' cord/conduit
06	6' cord/conduit
10	10' cord/conduit
20	20' cord/conduit

Prices for Steps 1-4.

			03	06	10	20
Y1325.	**3**	**A**	$482	482	494	544
		B	$539	539	549	600
	7	**A**	$554	554	568	617
		B	$611	611	623	674
	5	**A**	$602	602	611	662
		B	$658	658	667	717
	6	**A**	$674	674	684	736
		B	$729	729	743	791

Step 5. Finish

0K	silver anodized	+$0

Cable Management Clip DT9A.

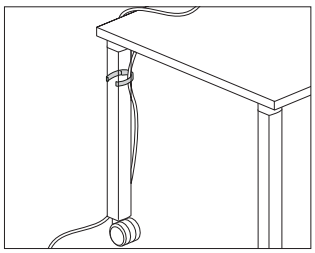

Product Information

Description

This plastic clip snaps onto an Everywhere™ table leg to route cables or cords. Finish is clear. Package of 10.

Dimensions

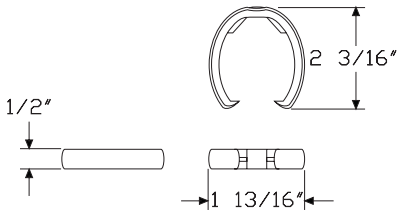

Specification Information

Step 1.

DT9A.	$40

Vertical Cord Covers DT9B.

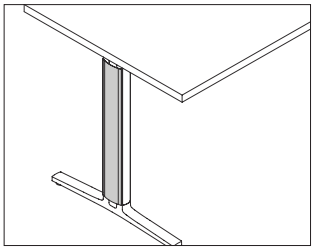

Product Information

Description

These cord covers attach to Everywhere™ table T-leg and Y-leg sections that have either casters or glides. The covers are field installed, and are easily removed and reinstalled for ease of cable management.

Notes

The T cover works with both the (T) and (C) base options.

The Y cover works with both the (E) and (G) base options.

To ensure proper height of the covers, select (C) if your table has casters or select (G) if your table has glides.

Dimensions

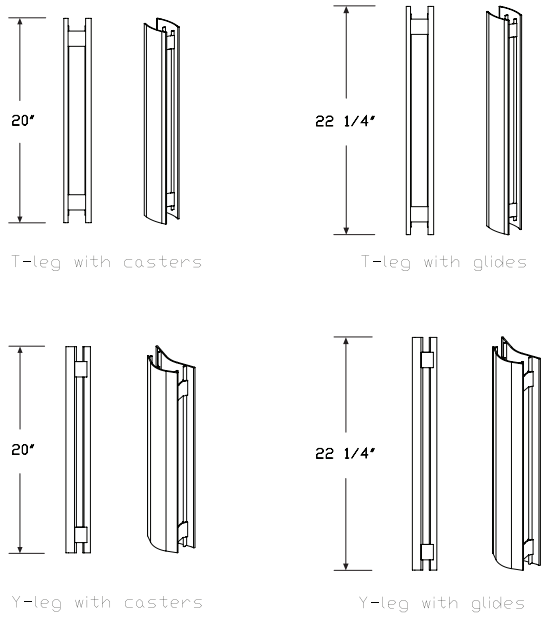

Specification Information

Step 1.

DT9B.

Step 2. Leg Type

T	T-leg	
E	Y-leg	

Prices for Steps 1-2.

DT9B.	**T**	$279
	E	$279

Step 3. Caster or Glide Table

C	for table with caster base	+$0
G	for table with glide base	+$0

Step 4. Leg/Base Finish

Metallic Paint

CN	metallic champagne	+$0
EH	metallic bronze	+$0
MS	metallic silver	+$0

Sand Texture Paint

BK	black	+$0

Smooth Paint

8Q	folkstone grey	+$0
91	white	+$0
98	studio white	+$0
BU	black umber	+$0
CL	cool grey neutral	+$0
G2	graphite satin	+$0
HF	inner tone light	+$0
LU	soft white	+$0
MT	medium tone	+$0
SG	slate grey	+$0
WL	sandstone	+$0
WN	warm grey neutral	+$0

Modesty Panel Y1113.

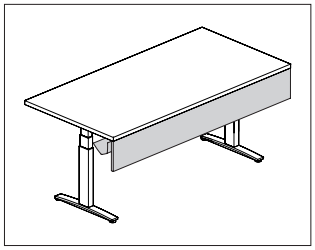

Product Information

Description

This modesty panel attaches to a table, desk, peninsula, or work surface. It has a solid MDF core with a laminate or veneer surface, aluminum top rail and attachment brackets. Cable trough is optional. Attachment hardware included.

Notes

Specify modesty panel to be equal to surface width, or 6″ less than surface width of a height adjustable table.

Modesty panel dimension is approximately 10″ high with width specified in step 1. Actual width 1/4″ less than specified value.

Modesty panel is field installed.

Brackets are located to work with Connect™ 2-circuit power system.

Modesty panel (Y1113.) may impede ideal folding functionality of flip top table (DT5Ax.). For use with flip top table, modesty panel (Y1114.) is recommended. It comes only with a fabric surface.

Dimensions

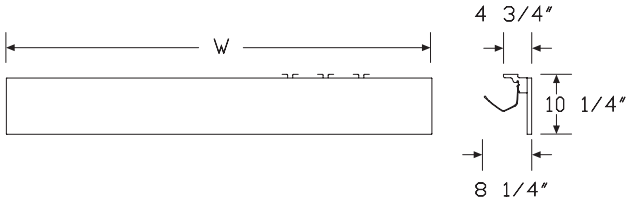

Specification Information

Step 1.

Y1113.

Step 2. Width

24	24″ wide
30	30″ wide
36	36″ wide
42	42″ wide
48	48″ wide
54	54″ wide
60	60″ wide
66	66″ wide
72	72″ wide

Step 3. Cable Trough

N	without added cable trough
Y	with added cable trough

Step 4. Surface Material

L	laminate top/thermoplastic edge
W	veneer top/veneer edge

Prices for Steps 1-4.

			L	W
Y1113.	**24**	**N**	$200	354
		Y	$355	527
	30	**N**	$217	397
		Y	$403	602
	36	**N**	$237	442
		Y	$439	663
	42	**N**	$256	486
		Y	$483	733
	48	**N**	$276	530
		Y	$528	804
	54	**N**	$297	575
		Y	$573	875
	60	**N**	$315	618
		Y	$618	944
	66	**N**	$315	661
		Y	$662	1014
	72	**N**	$342	704
		Y	$705	1084

Step 5. Finish		
For laminate top/thermoplastic edge (L)		
76	light brown walnut	+$0
8Q	folkstone grey	+$0
91	white	+$0
98	studio white	+$0
CL	cool grey neutral	+$0
G1	graphite	+$0
HM	natural maple	+$0
HP	light anigre	+$0
HX	aged cherry	+$0
HY	walnut on cherry	+$0
LA	light ash	+$0
LBA	clear on ash	+$0
LBB	oak on ash	+$0
LBC	walnut on ash	+$0
LBD	dark brown walnut	+$0
LBE	medium red walnut	+$0
LBF	neutral twill	+$0
LBG	sarum twill	+$0
LBH	earthen twill	+$0
LBJ	graphite twill	+$0
LBK	pewter mesh	+$0
LBL	steel mesh	+$0
LBM	crisp linen	+$0
LBN	classic linen	+$0
LBP	casual linen	+$0
LBQ	white twill	+$0
LBR	phantom ecru	+$0
LBS	phantom cocoa	+$0
LBU	medium matte walnut	+$0
LBV	warm grey teak	+$0
LU	soft white	+$0
WL	sandstone	+$0
WN	warm grey neutral	+$0
For veneer top/veneer edge (W)		
2U	light brown walnut	+$0
40	dark brown walnut	+$0
UL	natural maple	+$0

Step 6. Edge Finish		
For laminate top/thermoplastic edge (L)		
76	light brown walnut	+$0
8Q	folkstone grey	+$0
91	white	+$0
98	studio white	+$0
BU	black umber	+$0
CL	cool grey neutral	+$0
G2	graphite satin	+$0
HF	inner tone light	+$0
HM	natural maple	+$0
HP	light anigre	+$0
HT	inner tone	+$0
HX	aged cherry	+$0
HY	walnut on cherry	+$0
LA	light ash	+$0
LBA	clear on ash	+$0
LBB	oak on ash	+$0
LBC	walnut on ash	+$0
LBD	dark brown walnut	+$0
LBE	medium red walnut	+$0
LBF	neutral twill	+$0
LBG	sarum twill	+$0
LBH	earthen twill	+$0
LBJ	graphite twill	+$0
LBK	pewter mesh	+$0
LBL	steel mesh	+$0
LBM	crisp linen	+$0
LBN	classic linen	+$0
LBP	casual linen	+$0
LBQ	white twill	+$0
LBR	phantom ecru	+$0
LBS	phantom cocoa	+$0
LBU	medium matte walnut	+$0
LBV	warm grey teak	+$0
LU	soft white	+$0
MT	medium tone	+$0
WL	sandstone	+$0
WN	warm grey neutral	+$0

Fabric Modesty Panel Y1114.

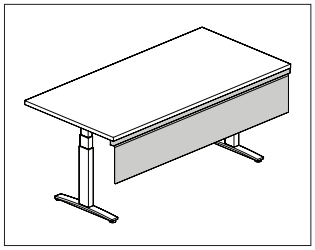

Product Information

Description

This modesty panel attaches to a table, desk, peninsula, or work surface. It has a fabric surface with aluminum top rail and attachment brackets. Attachment hardware included.

Notes

Specify modesty panel to be equal to surface width, or 6″ less than surface width of a height adjustable table.

For use with flip top table (DT5Ax.), modesty panel (Y1114.) is recommended to enable optimal folding functionality of the table.

Dimensions

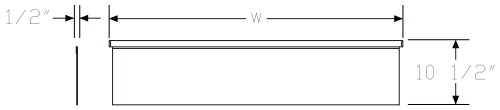

Specification Information

Step 1.

Y1114. A

Step 2. Width

24	24″ wide	A
30	30″ wide	A
36	36″ wide	A
42	42″ wide	A
48	48″ wide	A
54	54″ wide	A
60	60″ wide	A
66	66″ wide	A
72	72″ wide	A

Prices for Steps 1-2.

Y1114.	**24**	$182
	30	$199
	36	$215
	42	$228
	48	$243
	54	$274
	60	$287
	66	$303
	72	$314

Step 3. Fabric

Price Category 1	+$0

Cable Trough Y1200.

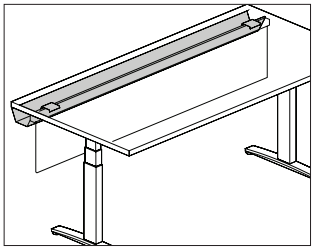

Product Information

Description

This trough attaches to a table, desk, peninsula, or work surface to hold and conceal cords and cables. It pivots down to allow easy access when laying cords inside, and can be specified with an optional modesty panel. The modesty panel has a fabric surface with aluminum top rail. Attachment hardware is included.

Notes

Specify trough to be equal to or less than the surface width.

Dimensions

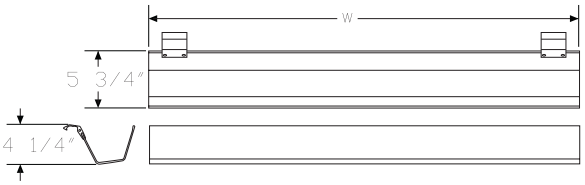

Specification Information

Step 1.

Y1200.

Step 2. Width

24	24" wide
30	30" wide
36	36" wide
42	42" wide
48	48" wide

Step 3. Modesty Panel Option

N	no modesty panel
M	modesty panel

Prices for Steps 1-3.

		N	M
Y1200.	**24**	$289	370
	30	$315	415
	36	$348	453
	42	$380	496
	48	$409	538

Step 4. Cable Trough Finish

AN	clear anodized aluminum	+$0

Step 5. Modesty Panel Fabric

For modesty panel (M)

Price Category 1	+$0

Cable Management Trough, Work Surface Suspended

AO382.

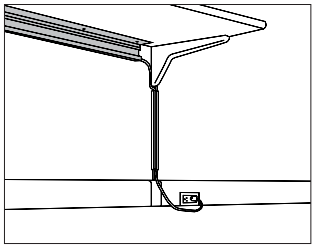

Product Information

Description

This trough attaches under an Action Office® suspended work surface to manage cables. Attachment hardware is included.

Dimensions

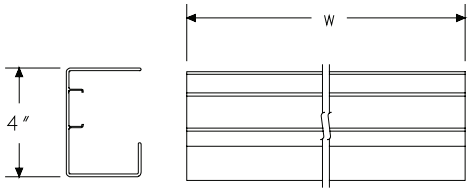

Specification Information

Step 1.

AO382.

Step 2. Width

30	30″ wide
40	40″ wide

Prices for Steps 1-2.

AO382.	**30**	$82
	40	$101

Step 3. Surface Finish

BU	black umber	+$0
MT	medium tone	+$0

Cord Manager FV984.

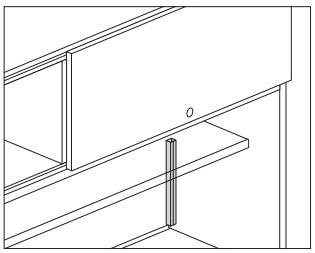

Product Information

Description

This cord manager routes a cord from the underside of a hutch to the surface when a task light is attached. Color is black. Package of 6.

Dimensions

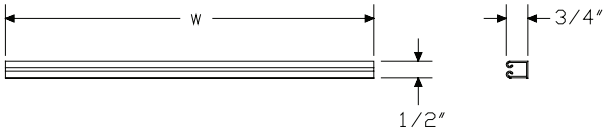

Specification Information

Step 1.

FV984.

Step 2. Height

12	12″ high
24	24″ high
30	29½″ high

Prices for Steps 1-2.

FV984.	**12**	$79
	24	$121
	30	$146

Logic Mini Y1414.

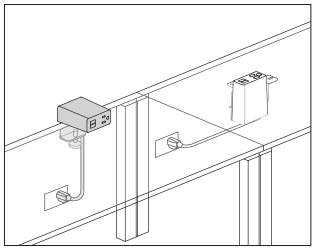

Product Information

Description

This electrical distributor plugs directly into floor, wall, or ceiling drop outlets. Each module configuration presents the same visual appearance. Cable clips and attachment hardware included. Product is UL listed.

Notes

Cable clips for cord management are intended for a 1-time installation.

Clamp versions can be reoriented in the field by a technician.

A small LED light illuminates through the USB ports when the USB version is plugged in and powered.

USB ports provide 10-watt power to charge most devices and tablets at full speed.

Cord color is predetermined. For white (91) finish cords will be white. For graphite (G1) finish cords will be black.

Grommet mount attachment (Y1414.xxxG) does not come with the mini grommet. Order Logic mini grommet (Y1412.) separately, as needed.

Dimensions

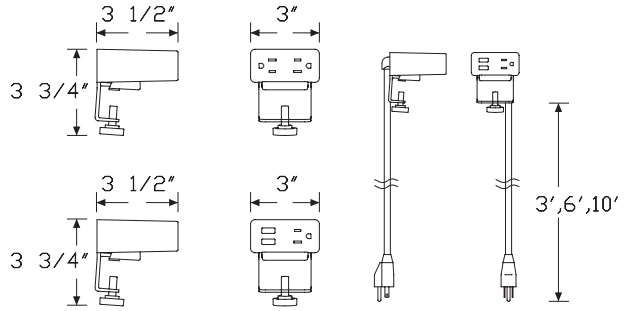

Surface Clamp

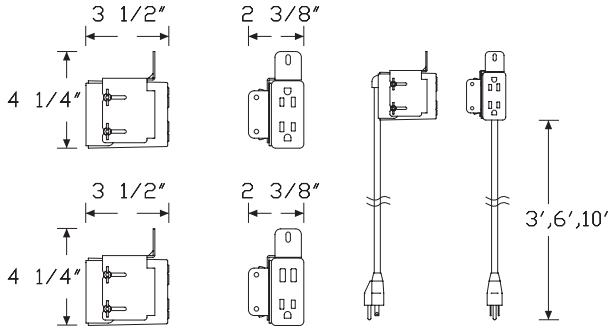

Grommet Mount

Specification Information

Step 1.

Y1414. A

Step 2. Configuration

J	1 simplex receptacles, 2 powered USB A
K	2 simplex receptacles A

Step 3. Cord/Conduit Length

03	3′ cord/conduit A
06	6′ cord/conduit A
10	10′ cord/conduit A

Step 4. Attachment

G	grommet mount A
S	surface clamp A

Prices for Steps 1-4.

			G	S
Y1414.	**J**	**03**	$356	356
		06	$356	356
		10	$366	366
	K	**03**	$199	199
		06	$199	199
		10	$209	209

Step 5. Finish

BK	black A	+$0
91	white A	+$0
98	studio white A	+$0
G1	graphite A	+$0

Logic Mini - Vine Y1415.

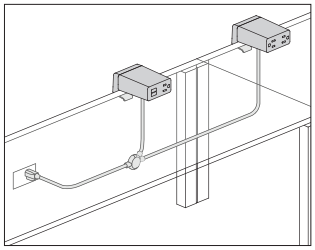

Product Information

Description

This electrical distributor plugs directly into floor, wall, or ceiling drop outlets. Each module configuration presents the same visual appearance. Cable clips and attachment hardware included. Product is ETL listed to UL962.

Notes

Cable clips for cord management are intended for a 1-time installation.

Clamp versions can be reoriented in the field by a technician.

Jumper length denotes distance between center points of each split point.

Cord length denotes distance from plug end to first split point.

All branch lengths from main power cord to module are 12".

A small LED light illuminates through the USB ports when the USB version is plugged in and powered.

USB ports provide 10-watt power to charge most devices and tablets at full speed.

The cord head contains a circuit breaker when there are more than 3 simplex receptacles.

Grommet mount attachment (Y1415.xxxxG) does not come with the mini grommet. Order Logic mini grommet (Y1412.) separately, as needed.

Dimensions

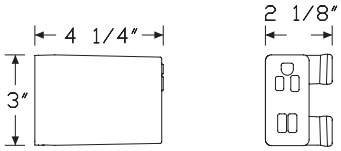

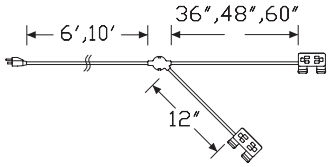

Two Power Modules

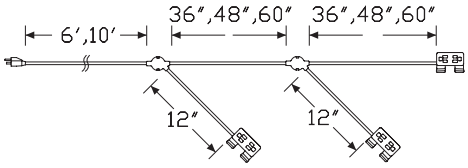

Three Power Modules

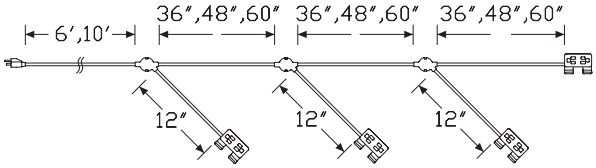

Four Power Modules

Specification Information

Step 1.

Y1415. A

Step 2. Number of Modules

2	two power modules A
3	three power modules A
4	four power modules A

Step 3. Power Type

J	1 simplex receptacles, 2 powered USB, all modules A
K	2 simplex receptacles, all modules A
L	first module has 1 AC plus 2 powered USB all other modules have all AC simplexes A

Step 4. Jumper Length

36	36″ between split points A
48	48″ between split points A
60	60″ between split points A

Step 5. Attachment

G	grommet mount A
S	surface clamp A

Step 6. Cord/Conduit Length

06	6′ cord/conduit A
10	10′ cord/conduit A

Prices for Steps 1-6.

			36G06	36G10	36S06	36S10	48G06	48G10
Y1415.	**2**	**J**	$787	798	787	798	796	807
		K	$471	483	471	483	480	491
		L	$629	640	629	640	638	650
	3	**J**	$1173	1183	1173	1183	1190	1201
		K	$715	728	715	728	735	745
		L	$875	885	875	885	891	903
	4	**J**	$1592	1604	1592	1604	1618	1630
		K	$961	971	961	971	988	998
		L	$1119	1130	1119	1130	1145	1155

			48S06	48S10	60G06	60G10	60S06	60S10
Y1415.	**2**	**J**	$796	807	805	817	805	817
		K	$480	491	489	500	489	500
		L	$638	650	648	658	648	658
	3	**J**	$1190	1201	1208	1218	1208	1218
		K	$735	745	751	761	751	761
		L	$891	903	910	920	910	920
	4	**J**	$1618	1630	1656	1667	1656	1667
		K	$988	998	1012	1025	1012	1025
		L	$1145	1155	1171	1182	1171	1182

Step 7. Finish

91	white A	+$0
98	studio white A	+$0
BK	black A	+$0
G1	graphite A	+$0

Logic C1000 Universal Clamp Mount Distributor

Y1423.

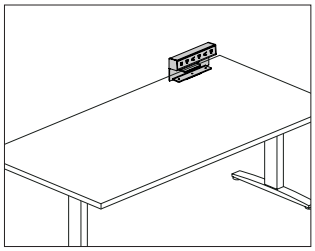

Product Information

Description

This Logic Power Access Solutions™ clamp mounted electrical distributor comes in several widths and configurations of simplex receptacles and USB charging ports. The unit is powered using a standard power cord with plug end or a hard-wired connection with electrical conduit. Data cords can be routed through the integrated opening at the rear of the unit. Product is UL listed.

Notes

Clamp mounts on worksurfaces 1"-1$^1/_4$" thick.

Faceplate color matches unit color.

Simplex receptacles have alternating orientation and greater than normal plug spacing to accommodate most plug types.

USB ports supply 10-watt power and will charge most small electronic devices. Software in each device controls that devices ability to accept a charge via USB.

Dimensions

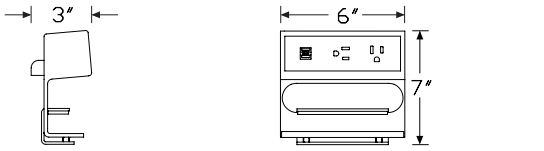

2 simplex receptacles, 2 powered USB

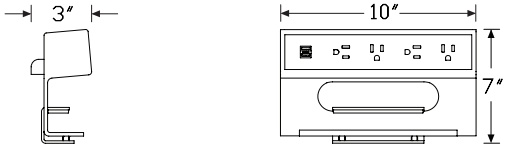

4 simplex receptacles, 2 powered USB

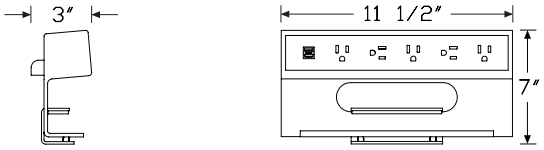

5 simplex receptacles, 2 powered USB

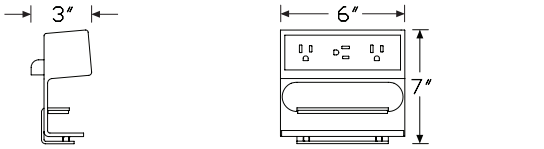

3 simplex receptacles

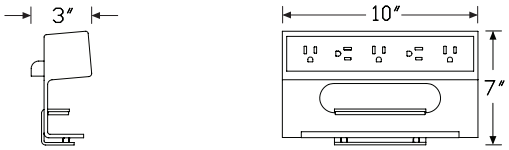

5 simplex receptacles

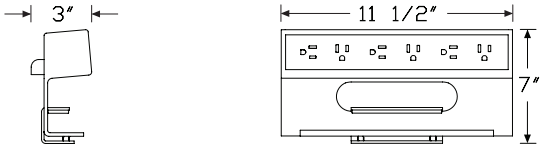

6 simplex receptacles

Logic C1000 Universal Clamp Mount Distributor *continued*

Specification Information

Step 1.

Y1423. A

Step 2. Configuration

A	2 simplex receptacles, 2 powered USB A
C	4 simplex receptacles, 2 powered USB A
D	5 simplex receptacles, 2 powered USB A
E	3 simplex receptacles A
F	5 simplex receptacles A
G	6 simplex receptacles A

Step 3. Power Type

A	power cord with plug end A
B	conduit with open end, for hard-wiring A

Step 4. Cord/Conduit Length

03	3′ cord/conduit A
06	6′ cord/conduit A
10	10′ cord/conduit A

Prices for Steps 1-4.

			03	06	10
Y1423.	**A**	**A**	$480	480	491
		B	$533	533	543
	C	**A**	$577	577	587
		B	$629	629	640
	D	**A**	$617	617	628
		B	$670	670	681
	E	**A**	$322	322	333
		B	$376	376	386
	F	**A**	$420	420	430
		B	$471	471	483
	G	**A**	$459	459	470
		B	$512	512	524

Step 5. Finish

91	white A	+$0
98	studio white A	+$0
BK	black A	+$0
G1	graphite A	+$0
MS	metallic silver A	+$0

Logic G1000 Grommet Mounted Electrical Distributor

Y1425.

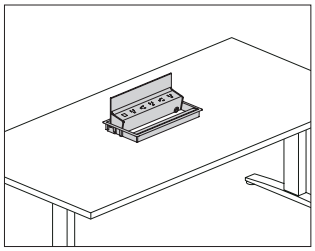

Product Information

Description

This Logic Power Access Solutions™ grommet mounted electrical distributor comes in several widths and configurations of simplex receptacles and USB charging ports. The unit is powered using a standard power cord with plug end, a hard-wired connection with electrical conduit, or an IEC connector when used with Renew™ Sit-to-Stand tables. An integrated cord keeper at the face of the unit captures data cords. The unit pivots from a closed position to 135° allowing easy access to power and data cords stored beneath the unit. Product is UL listed.

Notes

Field cutting of grommet cutout is possible.

IEC connector for Renew power type (C) includes short cord designed to connect to the Renew table power cord through-leg option. Actual cord length may vary.

Simplex receptacles have alternating orientation and greater than normal plug spacing to accommodate most plug types.

USB ports supply 10-watt power and will charge most small electronic devices. Software in each device controls that devices ability to accept a charge via USB.

Refer to Renew™ Sit-to-Stand Tables and Locale® planning guides for specific application information.

20′ cord/conduit length (20) is recommended for Exclave® applications.

Dimensions

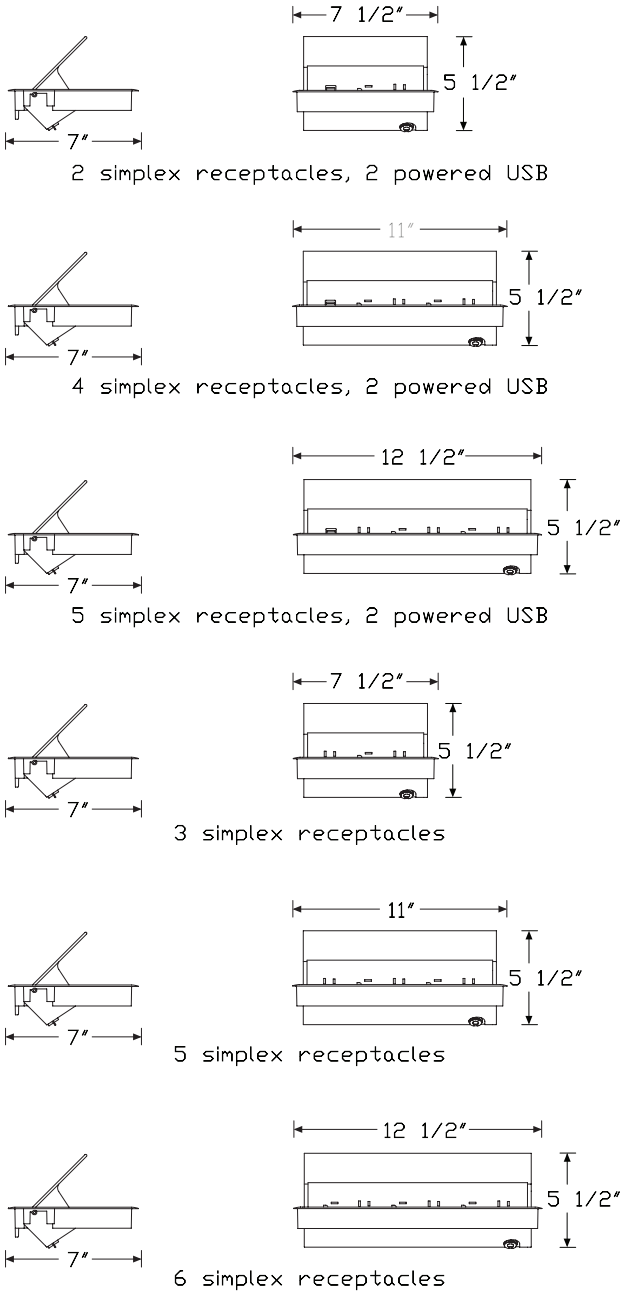

Logic G1000 Grommet Mounted Electrical Distributor *continued*

Specification Information

Step 1.

Y1425. A

Step 2. Configuration

A	2 simplex receptacles, 2 powered USB A
C	4 simplex receptacles, 2 powered USB A
D	5 simplex receptacles, 2 powered USB A
E	3 simplex receptacles A
F	5 simplex receptacles A
G	6 simplex receptacles A

Step 3. Power Type

A	power cord with plug end A
B	conduit with open end, for hard-wiring A
C	IEC connector for Renew Tables A

Step 4. Cord/Conduit Length

For power cord with plug end (A)

03	3′ cord/conduit A
06	6′ cord/conduit A
10	10′ cord/conduit A
20	20′ cord/conduit A

For conduit with open end, for hard-wiring (B)

03	3′ cord/conduit A
06	6′ cord/conduit A
10	10′ cord/conduit A

For IEC connector for Renew Tables (C)

03	3′ cord/conduit A

Prices for Steps 1-4.

			03	06	10	20
Y1425. A		**A**	$683	683	694	705
		B	$737	737	747	—
		C	$694	—	—	—
	C	**A**	$792	792	804	816
		B	$845	845	857	—
		C	$804	—	—	—
	D	**A**	$863	863	875	885
		B	$916	916	926	—
		C	$875	—	—	—
	E	**A**	$526	526	536	546
		B	$578	578	589	—
		C	$536	—	—	—
	F	**A**	$634	634	647	657
		B	$688	688	699	—
		C	$647	—	—	—
	G	**A**	$705	705	715	728
		B	$757	757	770	—
		C	$715	—	—	—

Step 5. Finish

91	white A	+$0
98	studio white A	+$0
BK	black A	+$0
G1	graphite A	+$0
MS	metallic silver A	+$0

Logic Mini Grommet Y1412.

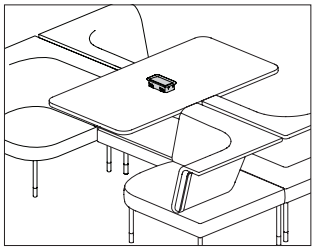

Product Information

Description

This Logic Power Access Solutions™ plastic grommet is available in mini rectangle or mini square configuration. The integrated flaps can hide the things below the surface while also retaining power and data cords.

Notes

This grommet is installed in some HermanMiller applications. Verify your application before ordering grommet separately.

Dimensions

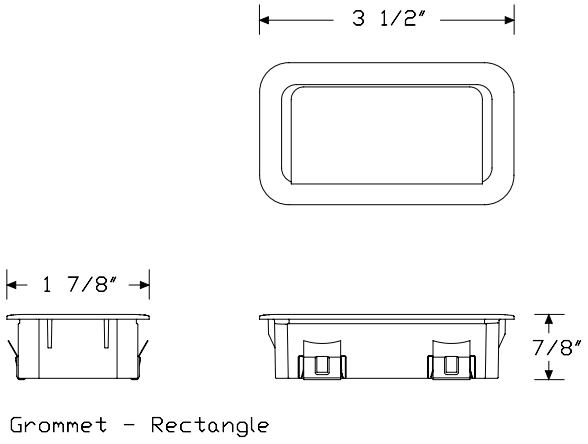

Grommet - Rectangle

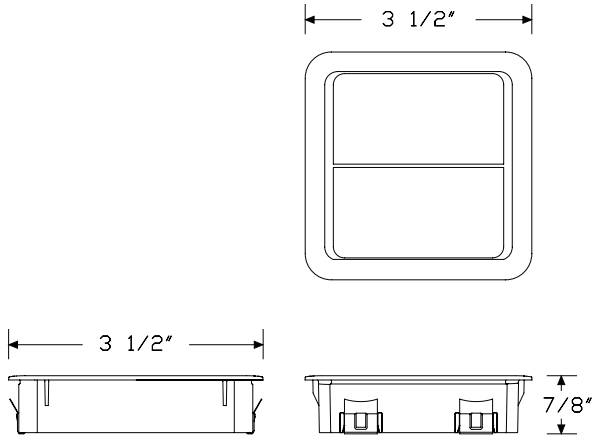

Grommet - Square

Specification Information

Step 1.

Y1412.

Step 2. Configuration

1	mini rectangle grommet	
2	mini square grommet	

Prices for Steps 1-2.

Y1412.	**1**	$28
	2	$32

Step 3. Finish

91	white	+$0
98	studio white	+$0
BK	black	+$0
G1	graphite	+$0

Connect™-Ganging Bracket Kit Y1338.

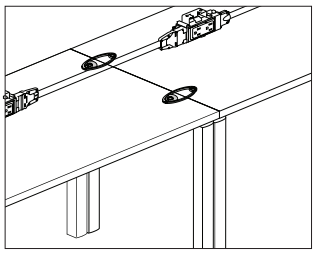

Product Information

Description

This kit has 2 clips that attach to the underside of 2 adjacent surfaces, ganging them together to provide stability and allowing electrical components to be routed from 1 surface to another. Finish is black.

Notes

Ganging bracket kit should not be used on 18″-deep Everywhere™ tables.

Dimensions

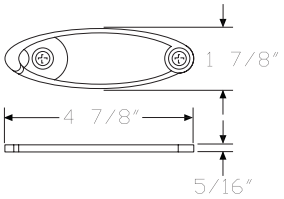

Specification Information

Step 1.

Y1338.	$81

Connect™-S100 Y1321.

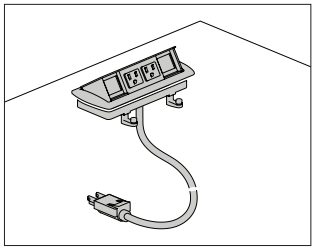

Product Information

Description

This electrical distributor mounts flush in a surface and has a one-touch pop-up mechanism for accessing power and data. It has 2 simplex receptacles and 2 data openings, and is available with a power cord with plug end, or electrical conduit for hardwire connection. A voice/data adapter kit is included, allowing the data openings to accept various manufacturers' couplers and jacks. Attachment hardware and cord/cable clips are also included. Product is UL listed.

Notes

Field cutting of surface may be required. Information on surface cutout size is included on instruction sheet.

Dimensions

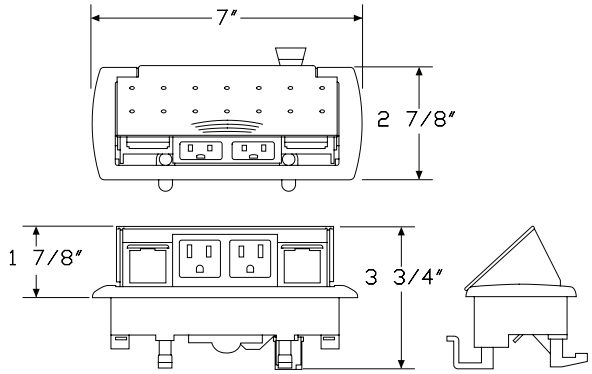

Specification Information

Step 1.

Y1321.

Step 2. Power Type

A	power cord with plug end
B	conduit with open end, for hard-wiring

Step 3. Cord/Conduit Length

03	3′ cord/conduit
06	6′ cord/conduit
10	10′ cord/conduit
20	20′ cord/conduit

Prices for Steps 1-3.

		03	06	10	20
Y1321.	**A**	$216	216	226	278
	B	$273	273	283	334

Step 4. Wiring Type

4Z	standard	+$0

Step 5. Finish

0H	black	+$0

Connect™-S200 Y1322.

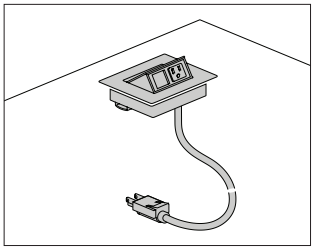

Product Information

Description

This electrical distributor mounts flush in a surface and has a one-touch pop-up mechanism for accessing power and data. It can be configured with 2 simplex receptacles, or 1 simplex receptacle and 1 data opening. The distributor is available with a power cord with plug end, or electrical conduit for hardwire connection. A voice/data adapter kit is included, allowing the data openings to accept various manufacturers' couplers and jacks. Attachment hardware and cord/cable clips are also included. Product is UL listed.

Notes

Field cutting of surface may be required. Information on surface cutout size is included on instruction sheet.

Distributor with PVC-free wiring option (LZ) is Cradle to Cradle Silver Certified.

Distributor with silver finish option (0I) or white finish option (0J) and standard wiring (4Z) has painted metal trim with white plastic simplex/data interior. Distributor with black finish option (0H) and standard wiring (4Z) has black painted trim with black plastic simplex/data interior. Distributor with PVC-free wiring option (LZ) has black plastic simplex/data interior, regardless of the finish color.

Dimensions

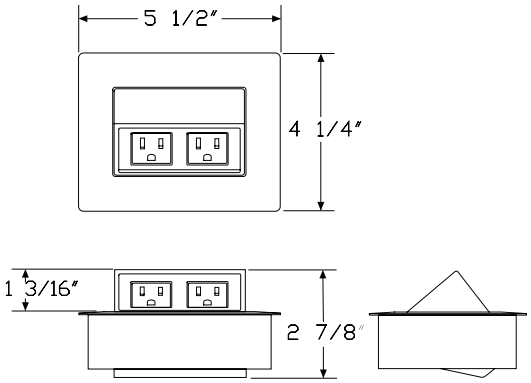

Specification Information

Step 1.

Y1322.

Step 2. Configuration

1	1 simplex receptacle, 1 data opening
2	2 simplex receptacles

Step 3. Power Type

A	power cord with plug end
B	conduit with open end, for hard-wiring

Step 4. Cord/Conduit Length

03	3′ cord/conduit
06	6′ cord/conduit
10	10′ cord/conduit
20	20′ cord/conduit

Prices for Steps 1-4.

			03	06	10	20
Y1322.	**1**	**A**	$257	257	267	318
		B	$313	313	322	372
	2	**A**	$273	273	283	334
		B	$327	327	339	391

Step 5. Wiring Type

4Z	standard	+$0
LZ	PVC-free	+$39

Step 6. Finish

0H	black	+$0
0I	silver	+$0
0J	white	+$0

Connect™-S300 Y1323.

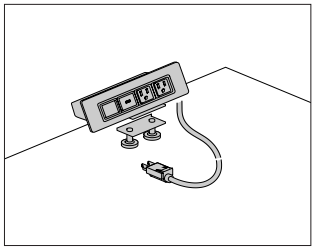

Product Information

Description

This electrical distributor can grommet-mount flush in a surface, or clamp-mount to the edge. It can be configured with several combinations of simplex receptacles, data openings, and USB charging ports. The distributor is available with a power cord with plug end, or electrical conduit for hardwire connection. A voice/data adapter kit is included, allowing the data openings to accept various manufacturers' couplers and jacks. Attachment hardware and cord/cable clips are also included. Product is UL listed.

Notes

Field cutting of surface may be required. Information on surface cutout size is included on instruction sheet.

Silver option (0l) and white option (0J) have painted metal trim with white plastic simplex/data interiors. Black option (0H) has black painted trim with black plastic simplex/data interior.

Overall width for distributor with 4 openings is 8″ wide. Overall width for distributor with 6 openings is 11″ wide.

USB port charges at 2.1 amps.

Dimensions

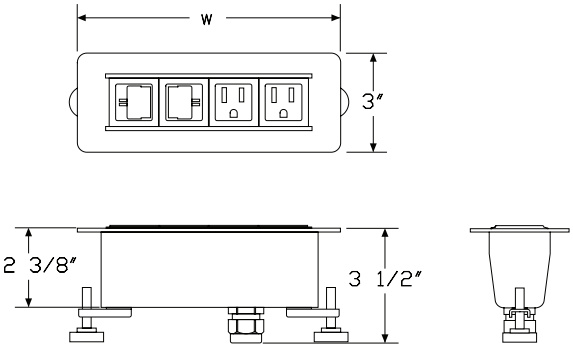

Specification Information

Step 1.

Y1323.

Step 2. Configuration

3	2 simplex receptacles, 2 data openings
4	3 simplex receptacles, 3 data openings
5	2 simplex receptacles, 1 data opening, 1 charging USB port
6	3 simplex receptacles, 2 data opening, 1 charging USB port

Step 3. Power Type

A	power cord with plug end
B	conduit with open end, for hard-wiring

Step 4. Cord/Conduit Length

03	3′ cord/conduit
06	6′ cord/conduit
10	10′ cord/conduit
20	20′ cord/conduit

Step 5. Attachment

G	grommet mount
S	surface clamp

Prices for Steps 1-5.

			03G	03S	06G	06S	10G	10S
Y1323.	**3**	**A**	$294	294	294	294	304	304
		B	$350	350	350	350	360	360
	4	**A**	$366	366	366	366	375	375
		B	$424	424	424	424	434	434
	5	**A**	$411	411	411	411	422	422
		B	$468	468	468	468	477	477
	6	**A**	$483	483	483	483	495	495
		B	$541	541	541	541	551	551

			20G	20S
Y1323.	**3**	**A**	$355	355
		B	$409	409
	4	**A**	$429	429
		B	$483	483
	5	**A**	$473	473
		B	$549	549
	6	**A**	$545	545
		B	$624	624

Step 6. Finish		
0H	black	+$0
0I	silver	+$0
0J	white	+$0

Connect™-S400 Y1324.

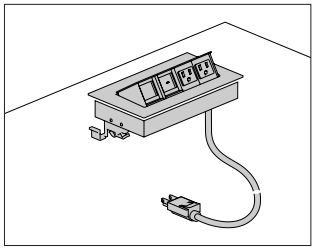

Product Information

Description

This electrical distributor mounts flush in a surface and has a one-touch pop-up mechanism for accessing power and data. It can be configured with several combinations of simplex receptacles, data openings, and USB charging ports. The distributor is available with a power cord with plug end, or electrical conduit for hardwire connection. A voice/data adapter kit is included, allowing the data openings to accept various manufacturers' couplers and jacks. Attachment hardware and cord/cable clips are also included. Product is UL listed.

Notes

Field cutting of surface may be required. Information on surface cutout size is included on instruction sheet.

Distributor with PVC-free wiring option (LZ) is Cradle to Cradle Silver Certified.

Distributor with silver anodized finish option (oK) and standard wiring (4Z) has anodized trim with white plastic simplex/data interior. Distributor with silver anodized finish option (oK) and PVC-free wiring (LZ) has anodized trim with black plastic simplex/data interior.

Overall width for distributor with openings is 8¼″ wide. Overall width for distributor with 7 openings is 12¾″ wide.

USB port charges at 2.1 amps.

Dimensions

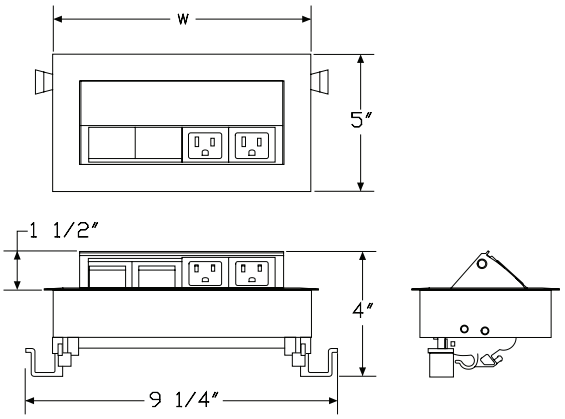

Specification Information

Step 1.

Y1324.

Step 2. Configuration

3	2 simplex receptacles, 2 data openings
5	3 simplex receptacles, 4 data openings
6	2 simplex receptacles, 1 data opening, 1 charging USB port
7	3 simplex receptacles, 3 data opening, 1 charging USB port
8	3 simplex receptacles, 2 data opening, 2 charging USB ports

Step 3. Power Type

A	power cord with plug end
B	conduit with open end, for hard-wiring

Step 4. Cord/Conduit Length

03	3′ cord/conduit
06	6′ cord/conduit
10	10′ cord/conduit
20	20′ cord/conduit

Prices for Steps 1-4.

			03	06	10	20
Y1324.	**3**	**A**	$409	409	420	471
		B	$466	466	477	528
	5	**A**	$527	527	537	587
		B	$583	583	589	639
	6	**A**	$528	528	537	587
		B	$584	584	595	647
	7	**A**	$644	644	655	706
		B	$701	701	708	758
	8	**A**	$762	762	771	824
		B	$819	819	826	876

Step 5. Wiring Type

4Z	standard	+$0
LZ	PVC-free	+$39

Step 6. Finish

0K	silver anodized	+$0

Connect™-S500 Y1325.

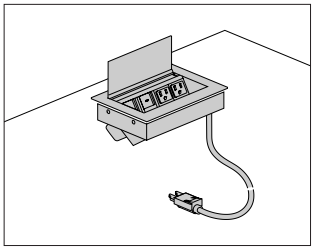

Product Information

Description

This electrical distributor mounts flush in a surface and has a flip-up lid for accessing power and data from above or below the surface. The flip lid can be closed once devices are connected for a clean visual appearance. It can be configured with several combinations of simplex receptacles, data openings, and USB charging ports. The distributor is available with a power cord with plug end, or electrical conduit for hardwire connection. A voice/data adapter kit is included, allowing the data openings to accept various manufacturers' couplers and jacks. Attachment hardware and cord/cable clips are also included. Product is UL listed.

Notes

Field cutting of surface may be required. Information on surface cutout size is included on instruction sheet.

Silver anodized option (0K) has anodized trim with white plastic simplex/data interior.

Overall width for distributor with 4 openings is 8 3/8" wide. Overall width for distributor with 6 openings is 11 3/8" wide.

USB port charges at 2.1 amps.

Dimensions

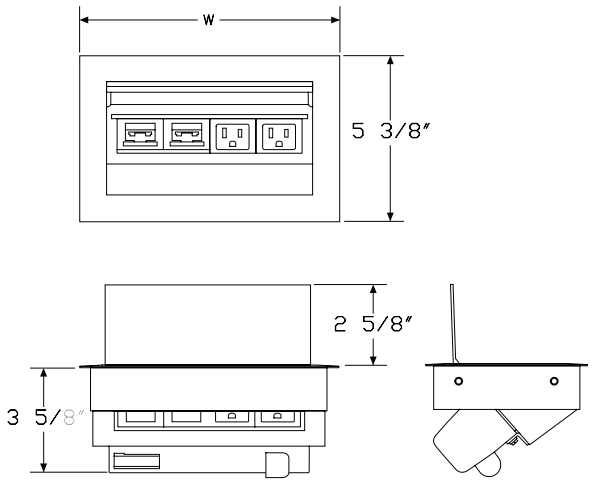

Specification Information

Step 1.

Y1325.

Step 2. Configuration

3	2 simplex receptacles, 2 data openings
7	3 simplex receptacles, 3 data openings
5	2 simplex receptacles, 1 data opening, 1 charging USB port
6	3 simplex receptacles, 2 data opening, 1 charging USB port

Step 3. Power Type

A	power cord with plug end
B	conduit with open end, for hard-wiring

Step 4. Cord/Conduit Length

03	3' cord/conduit
06	6' cord/conduit
10	10' cord/conduit
20	20' cord/conduit

Prices for Steps 1-4.

			03	06	10	20
Y1325.	**3**	**A**	$482	482	494	544
		B	$539	539	549	600
	7	**A**	$554	554	568	617
		B	$611	611	623	674
	5	**A**	$602	602	611	662
		B	$658	658	667	717
	6	**A**	$674	674	684	736
		B	$729	729	743	791

Step 5. Finish

0K	silver anodized	+$0

Connect™ - S720 - Connect Single Circuit Power Unit Y1372.

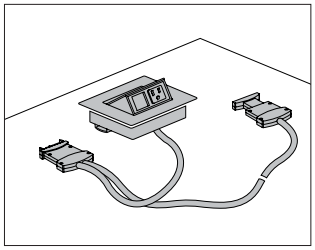

Product Information

Description

This dedicated modular single circuit electrical distributor mounts flush in a surface and has a one-touch pop-up mechanism for accessing power and data. It can be configured with 2 simplex receptacles, or 1 simplex receptacle and 1 data opening. Cord length is 60". A maximum of 8 single circuit electrical distributors can be daisy chained per power entry. A voice/data adapter kit is included, allowing the data openings to accept various manufacturers couplers and jacks. Attachment hardware and cord/cable clips are also included.

Notes

Field cutting of surface may be required. For information on surface cutout size, see included instruction sheet.

UL listed when used in conjunction with most Everywhere™ fixed height tables.

To gang tables together per electrical code requirements, order ganging bracket kit (Y1338.) separately.

Order single circuit power entry (Y1377.) separately.

Where lengths of greater than 60" are needed, order single circuit jumpers (Y1378.) separately. Each single circuit jumper counts toward the 8 allowed electrical distributors per power entry.

Silver option (0I) and white option (0J) have painted metal trim with white plastic simplex/data interiors. Black option (0H) has black painted trim with black plastic simplex/data interior.

Dimensions

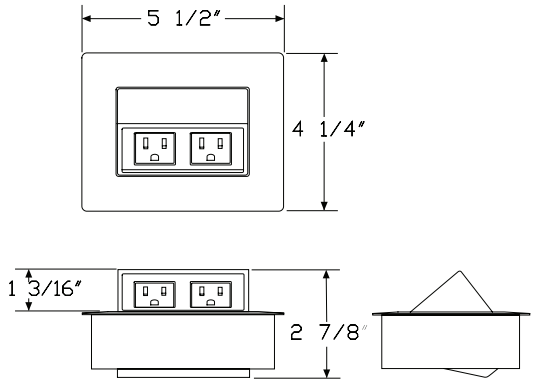

Specification Information

Step 1.

Y1372.

Step 2. Configuration

1	1 simplex receptacle, 1 data opening
2	2 simplex receptacles

Step 3. Cord Length

60	60" long

Prices for Steps 1-3.

		60
Y1372.	**1**	$375
	2	$392

Step 4. Finish

0H	black	+$0
0I	silver	+$0
0J	white	+$0

Connect™ - S730 - Connect Single Circuit Power Unit

Y1373.

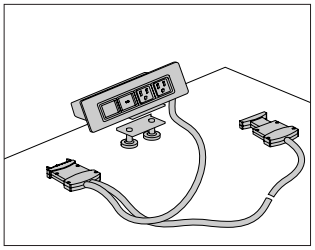

Product Information

Description

This dedicated modular single circuit electrical distributor mounts flush in a surface or with an edge clamp mount. It has 2 simplex receptacles and 2 data openings, or 2 simplex receptacles and 1 data opening and 1 USB charging port, and a 60″ cord. A maximum of 8 single circuit electrical distributors can be daisy chained per power entry. A voice/data adapter kit is included, allowing the data openings to accept various manufacturers' couplers and jacks. Attachment hardware and cord/cable clips are also included.

Notes

Field cutting of surface may be required. For information on surface cutout size, see included instruction sheet.

UL listed when used in conjunction with most Everywhere™ fixed height tables.

To gang tables together per electrical code requirements, order ganging bracket kit (Y1338.) separately.

Order single circuit power entry (Y1377.) separately.

Where lengths of greater than 60″ are needed, order single circuit jumpers (Y1378.) separately. Each single circuit jumper counts toward the 8 allowed electrical distributors per power entry.

Silver option (0I) and white option (0J) have painted metal trim with white plastic simplex/data interiors. Black option (0H) has black painted trim with black plastic simplex/data interior.

USB port charges at 2.1 amps.

Dimensions

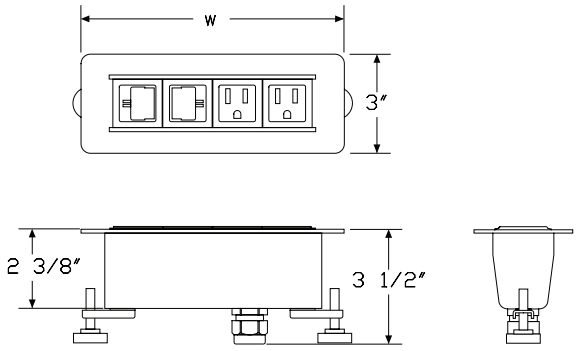

Specification Information

Step 1.

Y1373.

Step 2. Configuration

3	2 simplex receptacles, 2 data openings
4	2 simplex receptacles, 1 data opening, 1 charging USB port

Step 3. Cord Length

60	60″ long

Step 4. Attachment

G	grommet mount
S	surface clamp

Prices for Steps 1-4.

			G	S
Y1373.	**3**	**60**	$424	411
	4	**60**	$541	530

Step 5. Finish

0H	black	+$0
0I	silver	+$0
0J	white	+$0

Connect™ - S740 - Connect Single Circuit Power Unit

Y1374.

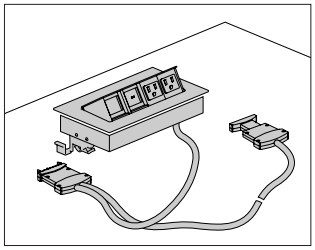

Product Information

Description

This dedicated modular single circuit electrical distributor mounts flush in a surface and has a one-touch pop-up mechanism for accessing power and data. It has 2 simplex receptacles and 2 data openings, or 2 simplex receptacles and 1 data opening and 1 USB charging port, and a 60″ cord. A maximum of 8 single circuit electrical distributors can be daisy chained per power entry. A voice/data adapter kit is included, allowing the data openings to accept various manufacturers' couplers and jacks. Attachment hardware and cord/cable clips are also included.

Notes

Field cutting of surface may be required. For information on surface cutout size, see included instruction sheet.

UL listed when used in conjunction with most Everywhere™ fixed height tables.

To gang tables together per electrical code requirements, order ganging bracket kit (Y1338.) separately.

Order single circuit power entry (Y1377.) separately.

Where lengths of greater than 60″ are needed, order single circuit jumpers (Y1378.) separately. Each single circuit jumper counts toward the 8 allowed electrical distributors per power entry.

Silver anodized option (oK) has anodized trim with white plastic simplex/data interior.

Overall width for distributor with 4 openings is 8¼″ wide.

USB port charges at 2.1 amps.

Dimensions

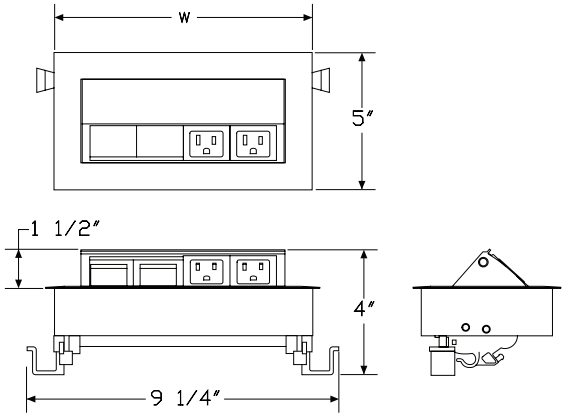

Connect™ - S740 - Connect Single Circuit Power Unit *continued*

Specification Information		
Step 1.		
Y1374.		
Step 2. Configuration		
3	2 simplex receptacles, 2 data openings	
4	2 simplex receptacles, 1 data opening, 1 charging USB port	
Step 3. Cord Length		
60	60″ long	
Prices for Steps 1-3.		
		60
Y1374.	**3**	$526
	4	$642
Step 4. Finish		
0K	silver anodized	+$0

Connect™ - S750 - Connect Single Circuit Power Unit

Y1375.

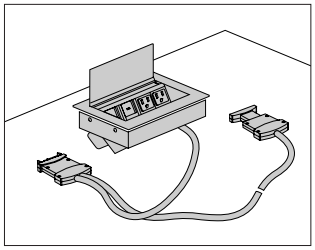

Product Information

Description

This dedicated modular single circuit electrical distributor mounts flush in a surface and has a flip-up lid for accessing power and data from above or below the surface. The lid can be closed once devices are connected for a clean visual appearance. The distributor has 2 simplex receptacles and 2 data openings, or 2 simplex receptacles and 1 data opening and 1 USB charging port, and a 60″ cord. A maximum of 8 single circuit electrical distributors can be daisy chained per power entry. A voice/data adapter kit is included, allowing the data openings to accept various manufacturers' couplers and jacks. Attachment hardware and cord/cable clips are also included.

Notes

Field cutting of surface may be required. For information on surface cutout size, see included instruction sheet.

UL listed when used in conjunction with most Everywhere™ fixed height tables.

To gang tables together per electrical code requirements, order ganging bracket kit (Y1338.) separately.

Order single circuit power entry (Y1377.) separately.

Where lengths of greater than 60″ are needed, order single circuit jumpers (Y1378.) separately. Each single circuit jumper counts toward the 8 allowed electrical distributors per power entry.

Silver anodized option (0K) has anodized trim with white plastic simplex/data interior.

Overall width for distributor with 4 openings is 8 3/8″ wide.

USB port charges at 2.1 amps.

Dimensions

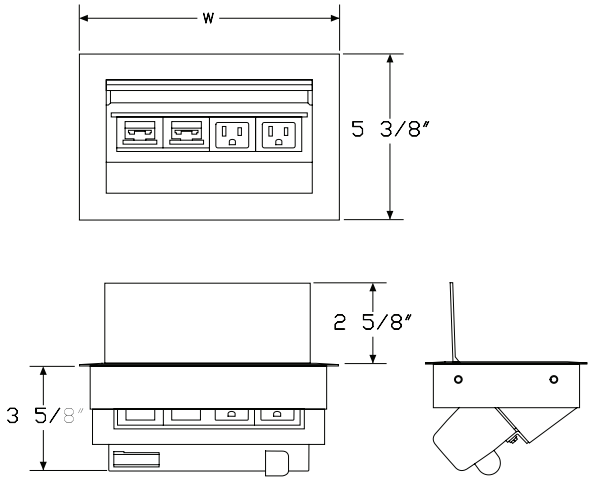

Connect™ - S750 - Connect Single Circuit Power Unit *continued*

Specification Information
Step 1.
Y1375.

Step 2. Configuration	
3	2 simplex receptacles, 2 data openings
4	2 simplex receptacles, 1 data opening, 1 charging USB port

Step 3. Cord Length	
60	60″ long

Prices for Steps 1-3.		
		60
Y1375.	**3**	$596
	4	$714

Step 4. Finish		
0K	silver anodized	+$0

Connect™ Single Circuit Electrical Power Entry

Y1377.

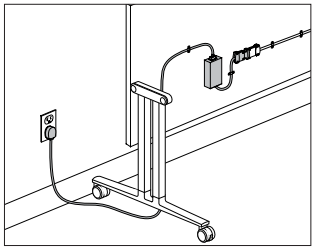

Product Information

Description

This standard receptacle 15-amp power entry provides power for single circuit electrical distributors. Up to 8 single circuit modular electrical distributors can be daisy chained and connected in any order. If more than 8 units are connected to this power entry, the system automatically shuts down and a red LED illuminates. A green LED indicates that more units can be connected and the system is ready. Standard attachment hardware is included.

Notes

UL listed when used in conjunction with most Everywhere™ fixed height tables.

Order electrical distributors (Y1372., Y1373., Y1374., Y1375.) and single circuit jumpers (Y1378.) separately.

Dimensions

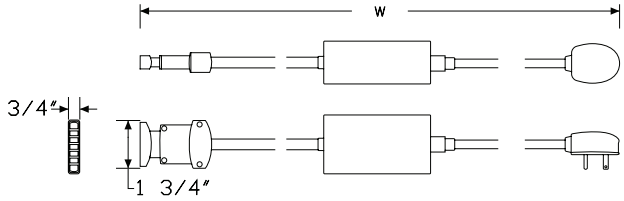

Specification Information

Step 1.

Y1377.

Step 2. Cord Length

06	6′ long
10	10′ long

Prices for Steps 1-2.

Y1377.	**06**	$480
	10	$504

Connect™ Single Circuit Electrical By-Pass Jumper

Y1378.

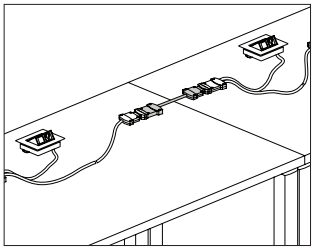

Product Information

Description

This electrical jumper provides additional length for the Connect™ single circuit modular electrical system. Jumpers are available in a variety of lengths and count as one of the 8 electrical distributors allowed per power entry.

Notes

UL listed when used in conjunction with most Everywhere™ fixed height tables.

Order electrical distributors (Y1372., Y1373., Y1374., Y1375.) and single circuit power entry (Y1377.) separately.

Dimensions

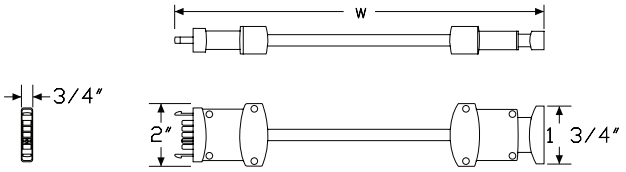

Specification Information

Step 1.

Y1378.

Step 2. Cord Length

12	12″ long
24	24″ long
36	36″ long
48	48″ long
60	60″ long

Prices for Steps 1-2.

Y1378.	**12**	$99
	24	$107
	36	$118
	48	$128
	60	$136

Index by Product Name

Everywhere™ Tables	
Cable Management Clip	page(s) 111
Cable Management Trough, Work Surface Suspended	117
Cable Trough	116
Classroom Curve Table	44
Concave Rectangle	34
Conference Corner Table	48
Conference Table HD Trough	103
Connect™-Ganging Bracket Kit	128
Connect™-S100	129, 105
Connect™-S200	130, 106
Connect™-S300	131, 107
Connect™-S400	133, 109
Connect™-S500	134, 110
Connect™ - S720 - Connect Single Circuit Power Unit	135
Connect™ - S730 - Connect Single Circuit Power Unit	136
Connect™ - S740 - Connect Single Circuit Power Unit	137
Connect™ - S750 - Connect Single Circuit Power Unit	139
Connect™ Single Circuit Electrical By-Pass Jumper	142
Connect™ Single Circuit Electrical Power Entry	141
Cord Manager	118
D-Shaped Table	23
Fabric Modesty Panel	115
Flat Edge Screen, Delineation	80
Flat Edge Screen, Surface Attached	76
Flat Edge Screen, Surface Attached with Modesty	78
Flip-Top Rectangular Table	54
Laminate Screen, Surface Attached	82
Laminate Screen, Surface Attached with Modesty	84
Logic C1000 Universal Clamp Mount Distributor	123, 97
Logic G1000 Grommet Mounted Electrical Distributor	125, 99
Logic G1200 Grommet Pass Thru	102
Logic HD Cable Manager	104
Logic Mini	119, 93
Logic Mini Grommet	127, 101
Logic Mini - Vine	121, 95
Metal Straight Screen, Surface Attached with Modesty	86
Modesty Panel	113, 87
Occasional Table, Round	71
Occasional Table, Square	68
Oval Table	19
Pari Screen, Delineation	74
Pari Screen, Surface Attached	91
Pari Screen, Surface Attached with Modesty	89
Rectangular Table	5
Round Corner Table	51
Round Table	15
Soft Rectangle - Meeting Table	27
Soft Square Table	38
Square Table	11
Standard-Height Table Base	61
Standard-Height Table Leg	58
Standing-Height Round Table	65
Standing-Height Square Table	62
Tear Drop Table	41
Vertical Cord Covers	112
Video Oval - Meeting Table	31

Index by Product Number

AO382.	Cable Management Trough, Work Surface Suspended	page(s) 117
DT1AE.	Rectangular Table	5
DT1AS.		
DT1AT.		
DT1BE.	Square Table	11
DT1BS.		
DT1BT.		
DT1CE.	Round Table	15
DT1CS.		
DT1CT.		
DT1DE.	Oval Table	19
DT1DS.		
DT1DT.		
DT1EE.	D-Shaped Table	23
DT1ES.		
DT1ET.		
DT1FE.	Soft Rectangle - Meeting Table	27
DT1FS.		
DT1FT.		
DT1GE.	Video Oval - Meeting Table	31
DT1GS.		
DT1GT.		
DT1HE.	Concave Rectangle	34
DT1HS.		
DT1HT.		
DT1JE.	Soft Square Table	38
DT1JS.		
DT1JT.		
DT1KE.	Tear Drop Table	41
DT1KS.		
DT1KT.		
DT1LE.	Classroom Curve Table	44
DT1LS.		
DT1LT.		
DT1ME.	Conference Corner Table	48
DT1MS.		
DT1MT.		
DT1NE.	Round Corner Table	51
DT1NS.		
DT1NT.		
DT2A.	Standard-Height Table Leg	58
DT2B.	Standard-Height Table Base	61
DT3BE.	Standing-Height Square Table	62
DT3BS.		
DT3BT.		
DT3CE.	Standing-Height Round Table	65
DT3CS.		
DT3CT.		
DT4BS.	Occasional Table, Square	68
DT4BT.		
DT4CS.	Occasional Table, Round	71
DT4CT.		
DT5AE.	Flip-Top Rectangular Table	54
DT5AS.		
DT5AT.		
DT9A.	Cable Management Clip	111
DT9B.	Vertical Cord Covers	112
DT9C.	Conference Table HD Trough	103
FT351.	Pari Screen, Surface Attached	91
FT353.	Pari Screen, Surface Attached with Modesty	89
FT354.	Pari Screen, Delineation	74
FT356.	Flat Edge Screen, Surface Attached	76
FT357.	Flat Edge Screen, Surface Attached with Modesty	78
FT358.	Flat Edge Screen, Delineation	80
FT360.	Laminate Screen, Surface Attached	82
FT361.	Laminate Screen, Surface Attached with Modesty	84
FV984.	Cord Manager	118
Y1113.	Modesty Panel	113, 87
Y1114.	Fabric Modesty Panel	115
Y1200.	Cable Trough	116
Y1321.	Connect™-S100	129, 105
Y1322.	Connect™-S200	130, 106
Y1323.	Connect™-S300	131, 107
Y1324.	Connect™-S400	133, 109
Y1325.	Connect™-S500	134, 110
Y1338.	Connect™-Ganging Bracket Kit	128
Y1372.	Connect™ - S720 - Connect Single Circuit Power Unit	135
Y1373.	Connect™ - S730 - Connect Single Circuit Power Unit	136
Y1374.	Connect™ - S740 - Connect Single Circuit Power Unit	137
Y1375.	Connect™ - S750 - Connect Single Circuit Power Unit	139
Y1377.	Connect™ Single Circuit Electrical Power Entry	141
Y1378.	Connect™ Single Circuit Electrical By-Pass Jumper	142
Y1412.	Logic Mini Grommet	127, 101
Y1414.	Logic Mini	119, 93
Y1415.	Logic Mini - Vine	121, 95
Y1420.	Logic G1200 Grommet Pass Thru	102
Y1423.	Logic C1000 Universal Clamp Mount Distributor	123, 97
Y1424.	Logic HD Cable Manager	104
Y1425.	Logic G1000 Grommet Mounted Electrical Distributor	125, 99
YT250.	Metal Straight Screen, Surface Attached with Modesty	86

20-Day or Less/Assigned Lead-Time Order Information

20-Day or Less and Assigned Lead-Time Programs

20-day or less and assigned lead-time products are designed for established Herman Miller dealers with pre-approved credit.

Products are distributed from multiple manufacturing facilities across the United States. All products and options not designated by an Assigned Lead-Time icon A will ship in 20 business days or less after being acknowledged by Herman Miller. Products and options designated by an A are on the assigned lead-time program and will ship in 20 days, less than 20 days, or more than 20 days from order acknowledgement.

Ordering Procedure

Please place orders through Order Manager. If this is not available to you, place orders through mail or fax. Verbal purchase orders will not be accepted.

Order Entry fax number for Passage®, 5000 Series, and Meridian®
Filing and Storage: (616) 846 9236.
Order Entry fax number for all other products:
(616) 654 3085.

For more information, contact your Customer Care representative at: (866) 854 3048 EXT 3400.

Shipments and Delivery

Per Herman Miller Terms and Conditions.

Changes and Cancellation

Per Herman Miller Terms and Conditions.

Vary Easy Program

Program Overview

Vary Easy is a program designed to help dealers specify standard products with a larger breadth of options. For example, depending on the type of product being specified, choices include additional size, finish, edge types, and cable management features. Vary Easy 3D, specIT, and third-party text-based specification packages support the Vary Easy program. Vary Easy 3D enables designers to create a 3D image, CAD symbols, and a price book page. A Vary Easy product number is assigned for each product as the user selects specific options. Once the product is completely specified, the order can be submitted via Kiosk's Order Manager or a dealer's business system.

Accessing and Specifying Vary Easy

To view the full product vocabulary, go to the Vary Easy Product Offering on Kiosk. To specify Vary Easy, go to the Vary Easy 3D website on Kiosk, specIT, or your third-party text-based specification package.

Once you've made your product line selection, continue to follow through each option and enter the specific options that represent the product you need. When the product is fully specified, Vary Easy will generate an orderable product number and instantly calculate a price.

Note: Failure to completely specify a product will cause a delay in order acknowledgements. Be sure to make a selection for all options offered.

The acknowledgement process for Vary Easy products is the same as for any standard order. Vary Easy products ship with a standardized lead time and are competitively priced.

For more information, contact your Customer Care Line at (866) 854 3048 EXT 3400.

Stain-to-Match Program

Program Overview

The Stain-to-Match program gives you the option of using veneer finishes that are not listed in the standard offering. The program allows Herman Miller to match a customer's existing recut or natural veneer, or create a new finish that is unique to an installation.

Specific information on approval, ordering, pricing, and warranty for the Stain-to-Match program is listed below. Questions and requests for assistance may be directed to Herman Miller Options at:

(800) 654 3910

Stain-to-Match Process

1. Fill out the Options Stain-to-Match Request Form and send along with a color sample (2" x 3" minimum) to the Herman Miller Options Applications Team at the address provided on the form. The form can be found on Omni.
2. Within 7-10 working days, Herman Miller Options will send a sample of the color-matched stain on Herman Miller veneer to the requester for the customer's signed approval.
3. If the sample meets the customer 's approval, sign the reverse side of the sample, scan and email the approval to:
   options@hermanmiller.com.
4. After the stain has been approved, a formal quotation with special number and pricing can be provided, or the product can be specified through the Vary Easy program, if available. Work with the Options team on final product needs and how to specify.
5. A purchase order can then be placed.

Stain-to-Match Warranty

Herman Miller warrants its products to be free from defects in craftsmanship from the date of delivery for the applicable warranty period. Herman Miller is responsible for the physical properties of the veneers available through the Stain-to-Match program, which include:

STA: Stain-to-Match on Recut Ash
STB: Stain-to-Match on Beech
STC: Stain-to-Match on Cherry
STD: Stain-to-Match on Oak
STK: Stain-to-Match on Reltech Anigre (Geiger)
STM: Stain-to-Match on Recut Mahogany
STP: Stain-to-Match on Maple
STU: Stain-to-Match on Walnut (Geiger)

See your specification tool for product specific finish offering limitations.

For more information about our products and services or to see a list of dealers, please visit us at HermanMiller.com or call (800) 851 1196.

© 2019 Herman Miller, Inc., Zeeland, Michigan

Distribution Rights

Working together since 1956, Herman Miller and Vitra are the authentic sources of designs by Charles and Ray Eames, Alexander Girard, and George Nelson. All the designs shown in this book are protected by law. Herman Miller has obtained all rights to make and sell these designs. Also, Herman Miller holds exclusive worldwide manufacturing and distribution rights for these products with the following exceptions:

Charles and Ray Eames, George Nelson, and Alexander Girard—Worldwide distribution rights for furniture in all areas except Europe and the Middle East. For those areas, please contact Vitra.

Isamu Noguchi—Worldwide distribution rights for the Noguchi Rudder Table. Distribution rights for the Noguchi Table in North America and Central America only. For all other areas, please contact Vitra.

Magis—Exclusive distribution rights in the US and Canada. For all other areas, please contact Magis.

Mattiazzi—Exclusive distribution rights in the US and Canada. For all other areas, please contact Mattiazzi.

® HermanMiller, ⓗ, 3D Intelligent, AO, Action Office, Aeron, ArcSpan, Aside, Avall, Avive, Bubble Lamps, Canvas Office Landscape, Caper, Celle, Co/Struc, Daisyone, Distil, Eames, Eco-Dematerialized, Embody, Envelop, Equa 2, Ergon 3, Ethospace, Exclave, Fine-Tune, FlexFront, Flo, Formcoat, Formwork, Ground Cloth, Herman Miller for the Home, Herman Miller for Healthcare, Intersect, Kinemat, Lapjack, Layout Studio, Lifework, Limerick, Live Unframed, Living Office, Locale, Maharam, Meridian, Mirra, Motia, Passage, Pellicle, Perspectives, Plex, PostureFit, Public Office Landscape, Resolve, Rodney, Sayl, Setu, Thrive, Tu, Wishbone, and Y-Tower are among the registered trademarks of Herman Miller, Inc., and its owned subsidiaries.

™ 8Z Pellicle, About Face, AireWeave, Albert, Backfit, Bubbletack, Burdick Group, Butterfly Back, Celeste, Cellular Suspension, Clam, Compass, Connect, Cosm, Cubert, DOT, Duracare, Durawrap, Eames Soft Pad, EnhancedAccess, Everywhere, Flex-Edge, Flute, Harmonic, Herman Miller Select, Hopsak 2, Intent, Iota, Jaw, Keyless Entry, Keyn Chair Group by Herman Miller, Latitude, Lino, Locale, Logic Mini, Logic Power Access Solutions, Live Platform, Loop, Lyris, Lyris 2, Made-to-Measure Storage, Metaform Portfolio, Mora, Multiscrim, Nelson, Nevi, Overlay, Pari, Pixelated Support, PostureFit SL, Prospect, Q, Renew, Sense, Soft Pad, Stackable, Stackable Storage, Striad, Swoop, Tone, TriFlex, Twist, Ubi, Verus, Vista and Wireframe are among the trademarks of Herman Miller, Inc., and its owned subsidiaries.

SM Herman Miller Options is among the service marks of Herman Miller, Inc.

AAP™ is a trademark of Extron Electronics.

Alexander Girard® is a registered trademark of The Alexander Girard Estate.

Chemsurf® is a registered trademark of Wilsonart International.

Corian® is a registered trademark of E. I. du Pont de Nemours and Company Corporation.

Crypton® is a registered trademark of Crypton, Inc.

DACRON® is a registered trademark of INVISTA S.a r.l.

Decora® is a registered trademark of Leviton Manufacturing Co., Inc.

Edelman® Leather is a registered trademark of Edelman Leather, Inc.

Extron® is a registered trademark of RGB Systems, Inc.

FENIX NTM® is a registered trademark of Arpa Industriale S.p.A.

FLEXNET™ is a trademark of Milliken & Company.

Floor Saver Glide® is a registered trademark of Carpin Manufacturing, Inc.

Geiger® is a registered trademark, and Bumper™, Saiba™, and Ward Bennett™ are trademarks, of Geiger International.

Goetz™ is a trademark of Mark W. Goetz.

Hang-It-All® is a registered trademark of Lucia Eames Demetrios, d.b.a. Eames Office.

Holophane® is a registered trademark of Holophane.

Ingeo™ is a trademark of Cargill Dow LLC.

iPad® is a registered trademark of Apple, Inc.

Leviton® is a registered trademark of Leviton Manufacturing Co., Inc.

LifeSize® is a registered trademark of LifeSize Communications, Inc.

Magis®, Bombo®, and Me Too® are registered trademarks of Magis S.p.A.

Microsoft® and Natural® Keyboard are registered trademarks of Microsoft Corporation.

Noguchi® and the Noguchi table configuration (trade dress) are registered trademarks, and Rudder Table™ is a trademark, of The Isamu Noguchi Foundation and Garden Museum.

Place Textiles® is a registered trademark of Place Textiles.

SuperSeat™ is a trademark of Dahti Seating, a division of ITW.