GSA prices effective April 1, 2019
(based on January 7, 2019, commercial price list)
Published November 2019

Storage Systems

Canvas Office Landscape® Storage

General Services Administration
Federal Supply Service
Authorized Federal Supply Schedule Price List

Online access to contract ordering information, terms and conditions, up-to-date pricing, and the option to create an electronic delivery order is available through GSA Advantage!®, a menu-driven database system. The Internet address for GSA Advantage! is www.gsaadvantage.gov.

Office Furniture
FSC Group 71, Part 1
Contract Number: GS-03F-036DA
Contract Period: December 21, 2015—December 20, 2020

Herman Miller, Inc.
855 East Main Avenue
Zeeland, Michigan 49464
(616) 654 3000 Phone
(616) 654 8278 Fax
www.HermanMiller.com/government

Business Size: Large

1a. Special Item Numbers (SIN)

SIN 71-1
Packaged Offices

SIN 711-1
Furniture Systems

SIN 711-2
Computer Furniture

SIN 711-3
Filing and Storage Cabinets

SIN 711-11

Tables and Accessories

SIN 711-16

Upholstered Seating

SIN 711-18

Multi-Purpose Seating

SIN 711-91

Project Management

Services under this SIN may be used only in conjunction with the purchase of new furniture. Please contact your local Herman Miller representative to discuss the available labor categories (listed below). The hourly rates listed are "Not To Exceed" or "NTE" values.

Furniture Project Manager: $64.75 per hour
Furniture Project Coordinator: $49.00 per hour
Build-Out Project Manager: $80.00 per hour

SIN 711-93

Reconfiguration and Relocation Services

Reconfiguration and Relocation Services will be provided by Herman Miller, Inc., or its participating dealer based on a fee not to exceed $55 per hour, which applies to services totaling $150,000 (per SIN) and below only. Services above $150,000 shall be negotiated on a case-by-case basis. This SIN may only be used with the purchase of new product under SIN 711-1.

See * Additional Notes for Installation & Reconfiguration and Relocation Services.

SIN 711-94

Design/Layout

Design service will be provided by Herman Miller, Inc., or its participating dealer based on a fee not to exceed $65 per hour.

SIN 711-95

Installation Services

Installation Services will be provided by Herman Miller, Inc., or its participating dealer based on a fee not to exceed $55 per hour ($82.50 per hour for after-hours Installation), which applies to services totaling $150,000 (per SIN) and below only. Services above $150,000 shall be negotiated on a case-by-case basis.

See * Additional Notes for Installation & Reconfiguration and Relocation Services.

* Additional Notes for Installation & Reconfiguration and Relocation Services:

FOB Destination (Drop Ship): Price includes product delivery to the site, brought to the tailgate of the truck. The purchaser is responsible for unloading.

Prices effective up to the maximum order by SIN only. Above the MO, pricing shall be negotiated on a case-by-case basis between the client and local dealer.

Standard Services are Subject to the Following Conditions:

Installation will be performed during normal weekday working hours.

Adequate facilities for delivery, unloading, moving and staging/storing the product during the installation process shall be provided.

Service work will not be hindered by other trades.

Electric, heat, and adequate elevator service will be furnished without charge.

The immediate installation area shall be complete and free of debris including the carpet/flooring before installation commences.

Any work requiring a licensed electrician is the responsibility of the buyer.

Additional Charges May Apply For:

Major Metro Markets and any non-ground floor installation.

Major Metro Markets include large population centers and urban environments.

Installation in a clinical/medical environment.

Special restrictions or limits established by local laws, ordinances or the directions of the buyer, including but not limited to restrictions on transportations of materials, street access to the job site and/or dock facilities.

Installations outside of a 50 mile radius of the servicing dealer.

Local Prevailing Wage and/or Union Labor Rates.

Any additional charges shall be quoted by the dealer and approved by the buyer prior to performance of the work.

SIN 711-96

Leasing

Contact Herman Miller participating government dealer for current leasing information.

SIN 711-99
New Product Introductions

SIN 711-500

Order-Level Materials (OLMs)

This SIN is only for products and/or services used in direct support of the purchase of new furniture. It requires approval from the ordering Contract Officer. Please contact your local Herman Miller representative to discuss the appropriate use of this SIN.

1b. Lowest Priced Model

SIN 711-1:	G9999.B	$9
SIN 711-2:	6-5-D	$40
SIN 711-3:	L29P.15	$11
SIN 711-11:	DT9A.	$39
SIN 711-16:	OA401	$43
SIN 711-18:	AS90598	$51
SIN 711-99:	BVP3.S	$12

1c. Not applicable

2. Maximum Order

SIN 711-1, SIN 711-2

$500,000 net product value

SIN 711-3, SIN 711-11

$300,000 net product value

SIN 711-16, SIN 711-18

$200,000 net product value

SIN 711-93

$150,000

SIN 711-94

$150,000

SIN 711-95

$150,000

SIN 711-96

$500,000 net product value

SIN 711-99

$50,000 net product value

SIN 711-500

$100,000

3. Minimum Order

$100 net

4. Geographic Coverage

Continental U.S.

Orders for Alaska, Hawaii, and Puerto Rico will be shipped F.O.B. inland carrier point of exportation.

5. Point of Production

Zeeland, Ottawa County, Michigan

Spring Lake, Ottawa County, Michigan

6. Pricing

Prices shown are list. Discounts include Industrial Funding Fee.

SIN 711-1

Product: Selected Action Office 1, Action Office 2, C-Style Overhead Storage, Ethospace System, Quadrant Pedestals, Supplemental Products, Tu Pedestals, and approved Herman Miller Options Products.

Standard Lead Time	Single Order Net Purchase	Discount From list
	$100 - 250,000	73.8%
	$250,001 - 500,000	76.8%

SIN 711-1

Product: Selected Nevi™ Tables, Nevi Link, Renew™ Tables, Renew Link and approved Herman Miller Options Products

Standard Lead Time	Single Order Net Purchase	Discount From List
	$100 - 500,000	73.8%

SIN 711-1

Product: Selected Motia® Tables, and approved Herman Miller Options Products

Standard Lead Time	Single Order Net Purchase	Discount From List
	$100 - 500,000	73.8%

SIN 711-1

Product: Tu Wood Pedestals and approved Herman Miller Options Products

Standard Lead Time	Single Order Net Purchase	Discount From List
	$100 - 300,000	74.3%

SIN 711-1

Product: Selected Canvas Office Landscape (Beam, Channel, Dock, Group, Metal Storage, Private Office, Vista, Wall, and Wood Storage) and approved Herman Miller Options Products

Standard Lead Time	Single Order Net Purchase	Discount From List
	$100 - 500,000	74.8%

SIN 711-1

Product: Selected Layout Studio® and approved Herman Miller Options Products

Standard Lead Time	Single Order Net Purchase	Discount From List
	$100 - 500,000	60.7%

SIN 711-1

Product: Selected Meridian Pedestals and approved Herman Miller Options Products

Standard Lead Time	Single Order Net Purchase	Discount From List
	$100 - 500,000	64.2%

SIN 711-1

Product: Selected Thrive Portfolio and approved Herman Miller Options Products

Standard Lead Time	Single Order Net Purchase	Discount From List
	$100 - 250,000	62%
	$250,001 - 500,000	66.4%

SIN 711-2

Product: Canvas Metal Desk and approved Herman Miller Options Products

Standard Lead Time	Single Order Net Purchase	Discount From List
	$100 - 500,000	74.8%

SIN 711-3

Product: Meridian Laterals, Towers, and Storage products and approved Herman Miller Options Products

Standard Lead Time	Single Order Net Purchase	Discount From List Laterals	Verticals	Towers & Storage
	$100 - 300,000	67.3%	66.3%	62.7%

SIN 711-3

Product: Tu Lateral Files, Tu Storage, Tu Towers, Tu Wood Cases, Tu Wood Cubbies, Tu Wood Credenzas, Tu Wood Towers, and approved Herman Miller Options Products

Standard Lead Time	Single Order Net Purchase	Discount From List
	$100 - 300,000	74.3%

SIN 711-11

Product: Selected Tables and Accessories and approved Herman Miller Options Products

Standard Lead Time	Single Order Net Purchase	Discount From List
Avive® Tables	$100 - 250,000	72.8%
	$250,001 - 500,000	74.8%
Eames® Conference &	$100 - 250,000	73.6%
Dining Tables	$250,001 - 300,000	77.6%
Everywhere™ Tables	$100 - 300,000	72.8%

SIN 711-16

Product: Swoop upholstered seating products and approved Herman Miller Options Products

Standard Lead Time	Single Order Net Purchase	Discount From List
Plex® Lounge Furniture	$100 - 200,000	59.5%
Swoop™	$100 - 200,000	60.7%

SIN 711-18

Product: Selected Seating and approved Herman Miller Options Products

Standard Lead Time	Single Order Net Purchase	Discount From List
Aeron®	$100 - 200,000	64.5%
Aside®	$100 - 200,000	64.2%
Caper®	$100 - 200,000	61.5%
Celle®	$100 - 200,000	59.7%
Cosm™	$100 - 200,000	61.7%
Embody®	$100 - 200,000	59.7%
Keyn	$100 - 200,000	57.7%
Lino™	$100 - 200,000	63.7%
Mirra® 2	$100 - 200,000	61.7%
Sayl®	$100 - 200,000	62.2%
Setu®	$100 - 200,000	59.7%
Verus™	$100 - 200,000	63.7%

SIN 711-99

Product: Selected Exclave®, Locale®, Public Office Landscape®, Resolve® System, and approved Herman Miller Options Products

Standard Lead Time	Single Order Net Purchase	Discount From List
Exclave	$100 - 50,000	61.7%
Intent Solution	$100 - 50,000	58.7%
Locale	$100 - 50,000	63.7%
Public Office Landscape	$100 - 50,000	61.7%
Resolve System	$100 - 50,000	69.8%

7. Quantity Discounts

Reference item #6.

8. Payment Term

Net 30 days

9. Government Commercial Credit Card

a. Government commercial credit cards are accepted below the micropurchase threshold.

b. Government commercial credit cards are accepted above the micropurchase threshold.

10. Foreign Items

None

11. Time of Delivery

a. 90 day ARO

b. Expedited delivery: Items listed in the 10-Day section of the catalogs are available for expedited delivery.

c. Overnight/2-day delivery: Select items may be available for overnight or 2-day delivery. Contact Herman Miller or a participating dealer for availability and rates.

d. Urgent requirements: Agencies may contact contractor or participating dealer to request faster delivery.

12. F.O.B.

F.O.B. destination except Alaska, Hawaii, and Puerto Rico, which will be shipped F.O.B. inland carrier point of exportation.

13. Ordering Address

a. Herman Miller, Inc.,
Government Customer Care 0161
855 East Main Avenue
Zeeland MI 49464.

b. For supplies and services, the ordering procedures information on Blanket Purchase Agreements (BPA's) and a sample BPA can be found at the GSA/FSS Schedule homepage (www.fss.gsa.gov/schedules).

14. Payment Address.

Herman Miller, Inc.
22764 Network Place
Chicago, IL 60673-1227

15. Warranty

Herman Miller, Inc., commercial warranty applies.

16. Export Packing Charge

Prices supplied on request.

17. Terms and Conditions of Government Purchase Card Acceptance

(any thresholds above the micropurchase level)

None.

18. Rental Maintenance and Repair Terms

Not applicable

19. Terms and Conditions of Installation

Installation Services will be provided by Herman Miller, Inc., or its participating dealer based on a fee not to exceed $55 per hour ($82.50 per hour for after-hours Installation), which applies to services totaling $150,000 (per SIN) and below only. Services above $150,000 shall be negotiated on a case-by-case basis.

Additional Notes for Installation & Reconfiguration and Relocation Services:

FOB Destination (Drop Ship): Price includes product delivery to the site, brought to the tailgate of the truck. The purchaser is responsible for unloading.

Prices effective up to the maximum order by SIN only. Above the MO, pricing shall be negotiated on a case-by-case basis between the client and local dealer.

Standard Services are Subject to the Following Conditions:

Installation will be performed during normal weekday working hours.

Adequate facilities for delivery, unloading, moving and staging/storing the product during the installation process shall be provided.

Service work will not be hindered by other trades.

Electric, heat, and adequate elevator service will be furnished without charge.

The immediate installation area shall be complete and free of debris including the carpet/flooring before installation commences.

Any work requiring a licensed electrician is the responsibility of the buyer.

Additional Charges May Apply For:

Major Metro Markets and any non-ground floor installation.

Major Metro Markets include large population centers and urban environments.

Installation in a clinical/medical environment.

Special restrictions or limits established by local laws, ordinances or the directions of the buyer, including but not limited to restrictions on transportations of materials, street access to the job site and/or dock facilities.

Installations outside of a 50 mile radius of the servicing dealer.

Local Prevailing Wage and/or Union Labor Rates.

Any additional charges shall be quoted by the dealer and approved by the buyer prior to performance of the work.

20. Terms and Conditions of Repair Parts

Not applicable

21. Service and Distribution Points

For service and distribution points nearest you, call (800) 851 1196.

22. Participating Dealers

Access Herman Miller web site for current list of participating dealers: www.HermanMiller.com/government.

23. Preventive Maintenance

Not applicable

24a. Special Attributes.

2018

Herman Miller receives the Corporation of the Year—Consumer Products award from the Michigan Minority Supplier Development Council.

Herman Miller achieves the Advanced Excellence in Supplier Diversity Award from the Great Lakes Women's Business Council for doing business with women-owned suppliers.

As one of the top-scoring companies in the industry for the fourteenth consecutive year, Herman Miller has qualified for inclusion in RobecoSAM's 2018 Sustainability Yearbook and received the Silver Class distinction for excellent sustainability performance—economic, environmental, and social.

Aeron receives Good Design Award from The Chicago Athenaeum Museum of Architecture and Design.

The Cosm Chair won the 2018 Best of NeoCon Gold Award in the Ergonomic Seating Category, the Interior Design HiP Award in the Ergonomic Seating Category, and a #MetropolisLikes Award. Cosm also won Mix Interiors "Product of the Year—Task" award.

For the 11th consecutive year, Herman Miller received a perfect score on the Corporate Equality Index and we were designated as Best Place to Work for LGBT equality. This report evaluates U.S. companies in terms of diversity, particularly their LGBT-related policies and practices.

2017

Herman Miller was named the 2017 "Corporation of the Year" in the consumer products sector by the Michigan Minority Supplier Development Council (MMSDC).

Herman Miller has received a 2017 SEAL (Sustainability, Environmental Achievement and Leadership) Business Sustainability Award.

Herman Miller has earned the 4 Star Diversity Visionary Award. This award celebrates the diversity, equality, and inclusion work of Herman Miller. The award is presented at the annual Diversity Equity Inclusion Summit, held by the Grand Rapids Area Chamber of Commerce.

Herman Miller named one of the Best and Brightest in Wellness for the fifth year in a row.

Working Mother magazine has recognized Herman Miller as one of the 2017 Working Mother 100 Best Companies.

Herman Miller earned our tenth consecutive perfect score in Human Rights Campaign (HRC) Foundation's 2017 Corporate Equality Index.

As one of the top-scoring companies in our industry for the thirteenth consecutive year, Herman Miller has qualified for inclusion in RobecoSAM's 2017 Sustainability Yearbook and received the Bronze Class distinction for our excellent economic, environmental, and social sustainability performance.

Herman Miller has once again earned the WorldatWork Seal of Distinction, a unique standard of excellence in work-life effectiveness that shows we provide a distinct, mutually beneficial workplace experience.

2016

Herman Miller was recognized as the Business of the Year at the Annual Meeting of the West Michigan Environmental Action Council (WMEAC). This award goes to the business with the greatest depth and breadth of support, unwavering dedication to environmental action in West Michigan, and a strong corporate commitment to environmental advocacy.

The 101 Best and Brightest Sustainable Companies once again (fifth consecutive year) recognized Herman Miller as an organization in Michigan (and for the first time, in the nation) that exhibits leadership and innovation in its approach to sustainability.

Herman Miller has been recognized by the Michigan Minority Supplier Development Council (MMSDC), as a "Corporation of the Year", and we also received a "2016 Excellence in Supplier Diversity Award" from the Great Lakes Women's Business Council. Additionally, we are the only West Michigan company this year to receive an "Ambassadors Championing Excellence" Award from the MMSDC.

Plex Lounge Furniture from Herman Miller receives #MetropolisLikes award at NeoCon 2016.

Plex Lounge Furniture from Herman Miller receives Interior Design HiP Award for Workplace Seating/Lounge at NeoCon 2016.

Spot Stools from Herman Miller Collection receive Interior Design HiP Award for Hospitality Seating at NeoCon 2016.

Herman Miller has been named a 2020 Women on Boards Winning Company. Companies selected for this recognition are considered champions of board diversity as 20 percent or more of their board seats are occupied by women.

Herman Miller selected for inclusion in the 2016 RobecoSAM Sustainability Yearbook for twelfth consecutive year.

Herman Miller again earns the WorldatWork Work-Life 2016 Seal of Distinction. This award identifies organizations that focus on programs that promote work-life balance and overall well-being.

2015

Herman Miller earns ninth consecutive perfect score in Human Rights Campaign (HRC) Foundation's 2016 Corporate Equality Index and we were designated as Best Place to Work for LGBT equality.

This is the fourth consecutive year that Herman Miller was named one of Michigan's Best and Brightest Sustainable Companies.

Herman Miller has received the Best and Brightest in Wellness Award for the third year in a row. This program is an innovative initiative that recognizes and celebrates quality and excellence in health awareness.

Herman Miller received the Forest Stewardship Council (FSC) Leadership Award for longstanding commitment to manufacturing with wood sourced from responsibly managed forests, which reduces environmental impacts by protecting against deforestation and forest degradation.

Herman Miller accepted its second Excellence in Reusable Packaging Award from the Reusable Packaging Association.

Herman Miller has once again been recognized for its commitment to best-in-class economic, environmental, and societal sustainability, earning a spot on the prestigious Dow Jones Sustainability Index (DJSI) for the twelfth consecutive year. We are the only contract furniture company recognized globally for its corporate sustainability leadership.

Herman Miller selected for inclusion in the 2015 RobecoSAM Sustainability Yearbook; awarded Bronze Class distinction for excellent sustainability performance for the second consecutive year.

Herman Miller received a Michigan Business Pollution Prevention (MBP3) Certificate – a recognition given by the Michigan Department of Environmental Quality (MDEQ) to organizations committed to environmental stewardship, conservation, and sustainable operations. This basic partnership with the MDEQ, which we've maintained since 1998, makes us eligible for our Clean Corporate Citizen (CCC) status that began in 2004 and our Environmental Leader status, which we received for the first time this past year.

MedAssets named Herman Miller Healthcare as Platinum Suppliers. MedAssets, a large group purchasing organization, helps providers enhance operational and financial performance so they can sustainably serve the needs of their community.

Herman Miller honored with five of 20 spots for the Michigan Environmental Leaders Award by the Michigan Department of Environmental Quality for our outstanding, voluntary environmental stewardship.

Renew Sit-to-Stand tables recognized on Record Products 2014 list by Architectural Record.

Herman Miller was again awarded a perfect score in the 2015 Corporate Equality Index. This is the eighth consecutive year we received a perfect score.

2014

Herman Miller has received the Best and Brightest in Wellness Award for the second year in a row. This program is an innovative initiative that recognizes and celebrates quality and excellence in health awareness.

Herman Miller's Locale wins International Design Excellence Awards (IDEA) Gold in the Office & Productivity category.

Herman Miller achieves eleventh consecutive listing on Dow Jones Sustainability World Index, an international stock portfolio that evaluates the annual performance of the world's largest 2500 companies using economic, environmental, and social criteria, known as the "triple bottom line" of sustainability.

2013

Herman Miller achieves tenth consecutive listing on Dow Jones Sustainability World Index.

Herman Miller has received the Best and Brightest in Wellness Award. This program is an innovative initiative that recognizes and celebrates quality and excellence in health awareness.

Herman Miller Earns Perfect Score on the Corporate Equality Index. We are one of only 303 major U.S. businesses to receive a perfect score in 2013, an achievement we have now obtained seven years in a row.

Herman Miller is listed in Forbes Magazine inaugural "Platinum List" of America's 400 best managed, large companies.

For the second consecutive year, Herman Miller is honored as one of West Michigan's "101 Best and Brightest Sustainable Companies".

2012

Herman Miller accepted its first Excellence in Reusable Packaging Award from the Reusable Packaging Association.

Herman Miller is named "Corporation of the Year" in the commercial products sector by the Michigan Minority Supplier Development Council.

In July 2012 Herman Miller was inducted into the Made in the USA Hall of Fame. Herman Miller is one of only 20 companies across the nation to receive this distinction.

Herman Miller achieves ninth consecutive listing on Dow Jones Sustainability World Index.

Herman Miller is honored as one of West Michigan's 101 Best and Brightest Sustainable Companies.

The Sustainable Asset Management (SAM) group selected Herman Miller for inclusion in "The Sustainability Yearbook 2012" and has awarded Herman Miller both the "SAM Sector Leader" and "SAM Sector Mover" distinctions.

Herman Miller was named one of 16 Section Leaders on Climate Counts 2011-2012 Scorecard Report, making us the industry leader for Home and office Furnishings.

SGS International Certification Services, Inc., recognizes Herman Miller's manufacturing sites, Midwest Distribution Center, and Design Yard for initial certification to the OHSAS 18001 standard as well as re-certification to ISO 14001.

2011

Trust Across America, a company dedicated to unraveling the complexities of trustworthy business behavior, listed Herman Miller as one of their "Top Ten Most Trustworthy Companies in America 2011."

The U.S. Environmental Protection Agency (EPA) selected Herman Miller, as a WasteWise Gold Achievement—Climate Change winner.

Herman Miller achieves eighth consecutive listing on Dow Jones Sustainability World Index, an international stock portfolio that evaluates the annual performance of the world's largest 2500 companies using economic, environmental, and social criteria, known as the "triple bottom line" of sustainability.

The Michigan Minority Supplier Development Council (MMSDC) named Herman Miller as its "Corporation of the Year" in the commercial products sector. This was the fifth time Herman Miller has received this award since 2005.

Herman Miller accepted its third Neighborhood Environmental Partners (NEP) award from the Michigan Department of Natural Resources and Environment.

Herman Miller receives the Reader's Choice award from TreeHugger's Best of Green: Design and Architecture category for the SAYL chair.

Herman Miller earns Citibank's Global Environmental Vendor of the Year award.

The SAYL chair from Herman Miller was dubbed the "Product Design of the Year" from the 2010 International Design Awards (IDA) jury.

Herman Miller Healthcare's Compass system was awarded a 2011 Medical Design Excellence Award (MDEA) for its research-based design and ability to be used in a variety of healing spaces, while simultaneously improving the overall delivery of healthcare.

The Sustainable Asset Management (SAM) Group selected Herman Miller for inclusion in the "Sustainability Yearbook 2011" and awarded us both the "SAM Sector Leader" and "SAM Sector Mover" distinctions.

Herman Miller has received the top rating for a fourth consecutive year in the Human Rights Campaign (HRC) Foundation's eighth annual Corporate Equality Index. The "Best Places to Work for LGBT Equality" distinction is awarded to businesses that scored 100% on the HRC Foundation's 2011 Corporate Equality Index.

Herman Miller again tops contract furniture industry in FORTUNE's 'Most Admired' Companies survey. For the 23rd time in 25 years.

24b. Section 508 Compliance

Not applicable

25. Data Universal Numbering System (DUNS): 00-601-2801

26. Registered in System for Award Management (www.SAM.gov) Database

27. Cancellation

Prior to production, no cancellation charge will apply. After production, only actual cost incurred that the contractor can demonstrate if items are sold after 3 months.

28. Restocking Charges

Agencies must notify the contractor for authorization prior to returning any items. The customer agency will be required to pay all packaging and return freight charges. A restocking fee of 50% for Systems Furniture and 35% for all other product lines will be charged for any returned items.

Herman Miller Miscellaneous Information:

Federal ID Number: 38-0837640

Commercial and Government Entity Code (CAGE): 40636

Data Universal Numbering System (DUNS) 00-601-2801

Commercial Entity Code (CEC): 00702290J

Contents

Introduction	**page 2**
Metal Storage	**3**
Metal Case Lateral Files	5
Metal Case Lateral File Accessories	9
Metal Case Pedestals	13
Metal Case Pedestal Accessories	20
Metal Case Credenzas	27
Metal Case Credenza Accessories	89
Metal Case Bookcases and Towers	99
Wood Storage	**111**
Wood Case Lateral Files	113
Wood Case Pedestals	117
Wood Case Pedestal Accessories	126
Wood Case Credenzas	127
Wood Case Credenza Accessories	189
Wood Case Bookcases and Towers	198
Wood Case Attached Storage	199
Wood Case Attached Storage (Legacy Products)	204
Wood Case Attached Storage Organizers	212
Wood Case Attached Storage Accessories (Legacy Products)	216
Indices	**221**
By Name	221
By Number	223
Appendices	
20-Day or Less/Assigned Lead-Time Order Information	
Keyed-Alike Information	
Stain-to-Match Program	
Vary Easy Program	
Customer's Own Material/Customer's Own Leather Order Information-Cushion Tops	
Proprietary Textiles Application Chart-Seating	
Proprietary Textile Colors-Seating	
Maharam® Application Chart-Seating	
Maharam Colors-Seating	

For the latest materials information, refer to the Materials pages on HermanMiller.com.

Introduction

A Note on the Organization of This Book

There are a few signals that will help you understand the organization of this book. Once you know them, you should be able to find your way around easily.

Like a newspaper, this book is formatted with columns of text and illustrations that run vertically.

Information wraps from one column to the next and continues for as many pages as it needs to.

Black bars are clues.

A black bar at the top of a page signals the start of information about a product.

This information is divided into two sections, each signaled by a black bar. Product Information includes a description, additional notes, and dimensional drawings. Specification Information, which always begins at the top of a column, includes a series of steps. Each step represents a decision you need to make in order to complete your product number. Steps must be followed sequentially. The number of pages needed to complete information on a product varies; some will be complete in one page; others may fill three or four pages. Just continue going through the steps until you run into the next product, signaled by the black bar at the top of the page.

Black tabs running along the outside edge of the page help you locate what section you are in or what section you want to go to. You can thumb forwards or backwards to find a section; tabs and text appear on both sides of the page.

The additional pages in the back of the book include the appendices and indices. They are signaled by a long black bar running along the outside edge of the page.

The index is presented two ways.

The first index is in alphabetical order by product name. It can be helpful if you are new to the products and numbering scheme or if you are looking for a type of product, such as work chair or round table.
The second index is by product number. It lists, in alphanumeric order, the base product number, typically a five-digit number.

This book is effective April 1, 2019, subject to change without notice. Products may be purchased from authorized Herman Miller dealers who will quote prices upon request. For more information about our products and services or to see a list of dealers, visit www.HermanMiller.com.

All prices are list prices in US Dollars. Additional services, such as planning services, design, storage, and installation, are not included and must be added to these prices when the additional services are requested.

Illustrations, specifications, and prices are based on the latest information at the time of publication. The right is reserved to make changes at any time without notice in prices, fabrics, finishes, materials, specifications, and models, and also to discontinue models and finishes.

Dimensions shown in the drawings are engineering drawing dimensions rounded up to the nearest 1/8". Product is shipped set up or knocked down. Products that include "Shipped knocked down" in the description require some assembly. If this statement does not appear in the description, the product is shipped assembled.

Service problems are normally handled by a Herman Miller authorized dealer. Where this cannot be accomplished on a local level, service problems should be referred to the Customer Care Representative for your region, Herman Miller, Inc., Zeeland, Michigan 49464.

20-Day or Less/Assigned Lead-Time Shipments

All products and options in this price book not designated by an Assigned Program icon A will ship in **20 business days or less** after being acknowledged by Herman Miller.

Products and options designated by an A are on the assigned lead-time program and may ship in 20 days, less than 20 days, or more than 20 days from order acknowledgement.

Metal Case Lateral Files

Metal Case Lateral File Accessories

Metal Case Pedestals

Metal Case Pedestal Accessories

Metal Case Credenzas

Metal Case Credenza Accessories

Metal Case Bookcases and Towers

Metal Freestanding Lateral File

FM20A.
FM20K.

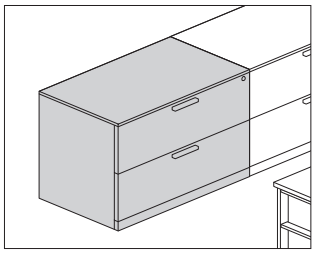

Product Information

Description

This lateral file has a 3/8"- or 1 1/4"-high laminate or veneer top and a painted steel case with a painted, laminate, or veneer front. It has a 2 1/4"-high base with 1" leveling glides and a positive interlock system that permits only 1 drawer to open at a time. Drawers have full-extension ball-bearing slides and accommodate front-to-back filing of letter-, legal, and A4-size hanging files.

Actual file widths are 29 7/8", 35 7/8", or 41 7/8"; actual depth is 19 7/8".

Notes

For additional product options, see Vary Easy Program® in Appendices.

Arc pull option (A.) conforms to guidelines of Americans with Disabilities Act (ADA).

Grain direction is vertical on veneer and wood-grain laminate fronts.

For information on counterweight option (CB), see Canvas Planning Guide.

For keyed-alike locks, see Keyed-Alike Information in Appendices.

Dimensions

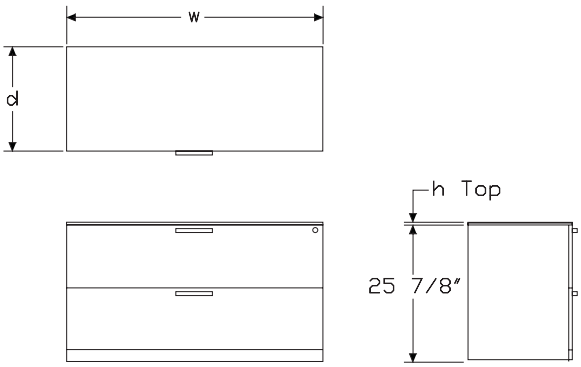

Specification Information

Step 1.

FM20 A

Step 2. Pull Type

A. arc pull A
K. bar pull A

Step 3. Width

30 30" wide A
36 36" wide A
42 42" wide A

Step 4. Depth

20 20" deep A

Step 5. Configuration

FF file/file A

Step 6. Base Height

2 2 1/4"-high base A

Step 7. Front Material

P painted metal front A
L laminate front A
W veneer front A

Step 8. Top

For file/file (FF) with painted metal front (P) or laminate front (L)

NT no top A
03 3/8" laminate top A
04 3/8" veneer top A
06 1 1/4" laminate top A
07 1 1/4" veneer top A

For file/file (FF) with veneer front (W)

NT no top A
04 3/8" veneer top A
07 1 1/4" veneer top A

Step 9. Lock

L lock A

Prices for Steps 1-9.

	FF2PNTL	FF2P03L	FF2P04L	FF2P06L	FF2P07L	FF2LNTL
FM20A. 30 20	$1747	1865	2103	1865	2103	1867

Metal Freestanding Lateral File

continued

36	20	$1949	2067	2305	2067	2305	2069
42	20	$2150	2269	2508	2269	2508	2272

			FF2L03L	FF2L04L	FF2L06L	FF2L07L	FF2WNTL	FF2W04L
FM20A.	30	20	$1987	2226	1987	2226	2538	2895
	36	20	$2190	2426	2190	2426	2730	3085
	42	20	$2392	2629	2392	2629	3180	3287

			FF2W07L
FM20A.	30	20	$2895
	36	20	$3085
	42	20	$3287

			FF2PNTL	FF2P03L	FF2P04L	FF2P06L	FF2P07L	FF2LNTL
FM20K.	30	20	$1747	1865	2165	1865	2165	1867
	36	20	$1949	2067	2373	2067	2373	2069
	42	20	$2150	2269	2581	2269	2581	2272

			FF2L03L	FF2L04L	FF2L06L	FF2L07L	FF2WNTL	FF2W04L
FM20K.	30	20	$1987	2290	1987	2290	2538	2980
	36	20	$2190	2496	2190	2496	2809	3175
	42	20	$2392	2705	2392	2705	3273	3287

			FF2W07L
FM20K.	30	20	$2980
	36	20	$3085
	42	20	$3383

Step 10. Paint/Steel Type

SS	smooth paint on smooth steel A	+$0
XS	textured paint on smooth steel A	+$0

Step 11. Surface Finish

Metallic Paint

For smooth paint on smooth steel (SS)

CN	metallic champagne A	+$0
EH	metallic bronze A	+$0
MS	metallic silver A	+$0

Sand Texture Paint

For textured paint on smooth steel (XS)

8Q	folkstone grey A	+$0
91	white A	+$0
98	studio white A	+$0
BK	black A	+$0
CL	cool grey neutral A	+$0
G1	graphite A	+$0
WL	sandstone A	+$0
WN	warm grey neutral A	+$0

Step 12. Front Finish

Solid-Color Laminate

For laminate front (L)

8Q	folkstone grey A	+$0
91	white A	+$0
98	studio white	+$0
CL	cool grey neutral A	+$0
LU	soft white A	+$0
WL	sandstone A	+$0
WN	warm grey neutral A	+$0

Linen Laminate

For laminate front (L)

LBM	crisp linen	+$0
LBN	classic linen	+$0
LBP	casual linen	+$0

Mesh Laminate

For laminate front (L)

LBK	pewter mesh	+$0
LBL	steel mesh	+$0

Twill Laminate

For laminate front (L)

LBF	neutral twill	+$0
LBG	sarum twill	+$0
LBH	earthen twill	+$0
LBJ	graphite twill	+$0
LBQ	white twill	+$0

Metal Freestanding Lateral File

continued

Wood-Grain Laminate

For laminate front (L)

HM	natural maple A	+$0
HP	light anigre A	+$0
LBA	clear on ash	+$0
LBR	phantom ecru	+$0
LBS	phantom cocoa	+$0
LBU	medium matte walnut	+$0
LBV	warm grey teak	+$0
LBB	oak on ash	+$0
LBC	walnut on ash	+$0
LBD	dark brown walnut	+$0
LBE	medium red walnut	+$0
76	light brown walnut A	+$0
HX	aged cherry A	+$0
HY	walnut on cherry A	+$0

Wood Veneer

For veneer front (W)

2U	light brown walnut A	+$0
40	dark brown walnut A	+$0
ED	aged cherry A	+$0
EK	medium red walnut A	+$0
EW	medium matte walnut A	+$0
ET	clear on ash A	+$0
EU	oak on ash A	+$0
EV	walnut on ash A	+$0
UL	natural maple A	+$0
UX	walnut on cherry A	+$0

Step 13. Top Finish

Solid-Color Laminate

For 3/8" laminate top (03) or 1 1/4" laminate top (06)

8Q	folkstone grey A	+$0
91	white A	+$0
98	studio white	+$0
CL	cool grey neutral A	+$0
LU	soft white A	+$0
WL	sandstone A	+$0
WN	warm grey neutral A	+$0

Linen Laminate

For 3/8" laminate top (03) or 1 1/4" laminate top (06)

LBM	crisp linen	+$0
LBN	classic linen	+$0
LBP	casual linen	+$0

Mesh Laminate

For 3/8" laminate top (03) or 1 1/4" laminate top (06)

LBK	pewter mesh	+$0
LBL	steel mesh	+$0

Twill Laminate

For 3/8" laminate top (03) or 1 1/4" laminate top (06)

LBF	neutral twill	+$0
LBG	sarum twill	+$0
LBH	earthen twill	+$0
LBJ	graphite twill	+$0
LBQ	white twill	+$0

Wood-Grain Laminate

For 3/8" laminate top (03) or 1 1/4" laminate top (06)

HM	natural maple A	+$0
HP	light anigre A	+$0
LBA	clear on ash	+$0
LBR	phantom ecru	+$0
LBS	phantom cocoa	+$0
LBU	medium matte walnut	+$0
LBV	warm grey teak	+$0
LBB	oak on ash	+$0
LBC	walnut on ash	+$0
LBD	dark brown walnut	+$0
LBE	medium red walnut	+$0
76	light brown walnut A	+$0
HX	aged cherry A	+$0
HY	walnut on cherry A	+$0

Wood Veneer

For 3/8" veneer top (04) or 1 1/4" veneer top (07)

2U	light brown walnut A	+$0
40	dark brown walnut A	+$0
ED	aged cherry A	+$0
EK	medium red walnut A	+$0
EW	medium matte walnut A	+$0
ET	clear on ash A	+$0
EU	oak on ash A	+$0
EV	walnut on ash A	+$0
UL	natural maple A	+$0
UX	walnut on cherry A	+$0

Metal Freestanding Lateral File

continued

Step 14. Pull Finish		
For arc pull (A.)		
NH	brushed nickel A	+$0
NK	black nickel A	+$0
For bar pull (K.)		
CN	metallic champagne A	+$0
MS	metallic silver A	+$0
Sand Texture Paint		
For bar pull (K.)		
79	green apple A	+$15
BK	black A	+$0
MY3	yellow oxide A	+$15
RO	red A	+$15
TRQ	turquoise A	+$15
Smooth Paint		
For bar pull (K.)		
8Q	folkstone grey A	+$0
91	white A	+$0
98	studio white A	+$0
G1	graphite A	+$0
WL	sandstone A	+$0

Step 15. Counterweight		
NO	no counterweight A	+$0
CB	counterweight A	+$115

Step 16. Lock Option		
KA	keyed alike, black A	-$10
KC	keyed differently, chrome A	+$0
KD	keyed differently, black A	+$0

Front-to-Back Filing Rail FM920.

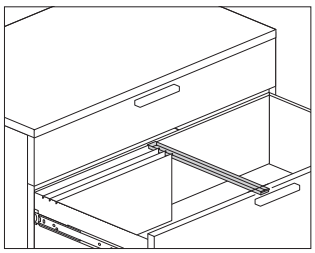

Product Information

Description

This filing rail holds letter-size files for front-to-back filing. The 18"-deep rail is used in a metal low credenza. The 20"-deep rail is used in a metal lateral file. Finish is black umber.

Dimensions

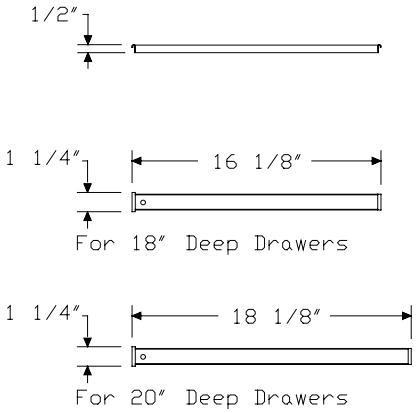

Specification Information

Step 1.

FM920.

Step 2. Width

00 for 30"- or 42"-wide drawers

36 for 36"-wide drawers

Step 3. Depth

18 for 18"-deep low credenza file drawer

20 for 20"-deep 2-high lateral file drawer

Prices for Steps 1-3.

	18	20
FM920. 00	$34	34
36	$34	34

Side-to-Side Filing Rail FM921.

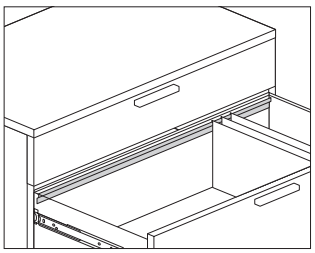

Product Information

Description

This filing rail holds letter- or legal-sized hanging folder for side-to-side filing in a metal low credenza or lateral file. Finish is black umber.

Dimensions

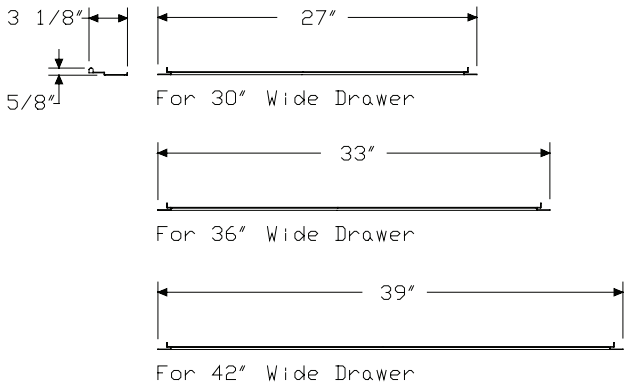

Specification Information

Step 1.

FM921.

Step 2. Quantity

1	1 filing rail
2	2 filing rails

Step 3. Width

30	for 30″-wide drawers
36	for 36″-wide drawers
42	for 42″-wide drawers

Prices for Steps 1-3.

		30	**36**	**42**
FM921.	**1**	$25	25	25
	2	$48	48	48

Movable Divider

FM922.
FM929.

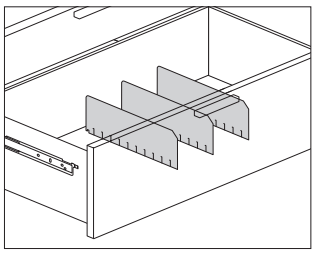

Product Information

Description

This adjustable metal divider fits into slots of a metal low credenza or lateral file drawer. The 18"-deep divider is used in a metal low credenza. The 20"-deep divider is used in a metal lateral file. Finish is black umber.

Dimensions

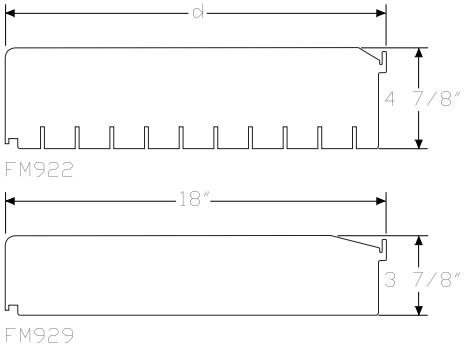

Specification Information

Step 1.

FM92

Step 2. Type

2. file drawer divider

9. credenza box drawer divider

Step 3. Quantity

1 1 divider

3 3 dividers

Step 4. Depth

For file drawer divider (2.)

18 for 18"-deep low credenza

20 for 20"-deep 2-high lateral file

For credenza box drawer divider (9.)

18 for 18"-deep low credenza

Prices for Steps 1-4.

		18	**20**
FM922.	**1**	$35	36
	3	$86	89
FM929.	**1**	$35	—
	3	$86	—

File Drawer Organizer FM923.

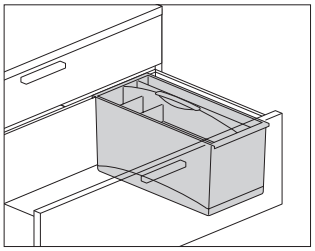

Product Information

Description

This 2-piece plastic organizer fits into any file drawer configured for letter-size filing. It has a removable top tray with sections for storing small items, and a bottom bin that can hold larger items or be divided into 3 sections; 2 vertical dividers included. Finish is black umber.

Dimensions

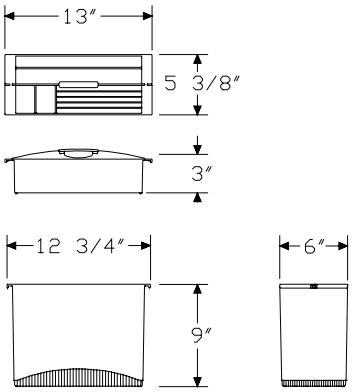

Specification Information

Step 1.

FM923.	$86

Metal Freestanding Pedestal

FM10A.
FM10K.

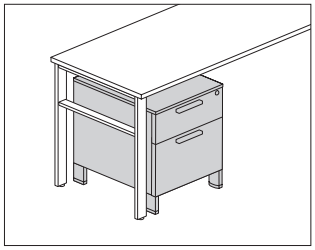

Product Information

Description

This pedestal has a 3/8"- or 1 1/4"-high laminate or veneer top and a painted steel case with a painted, laminate, or veneer front. It is available with 4"-high architectural feet or a 2 1/4"-high base with leveling glides. Architectural feet and glides have 1" adjustment range. The drawers have full-extension ball-bearing slides. File drawers accommodate front-to-back filing of letter-size hanging files.

Actual pedestal depths are 17 7/8", 21 7/8", or 27 7/8".

Notes

For additional product options, see Vary Easy Program® in Appendices.

Arc pull option (A.) conforms to guidelines of Americans with Disabilities Act (ADA).

Grain direction is vertical on veneer and wood-grain laminate fronts.

For additional stability, specify counterweight option (CB).

For keyed-alike locks, see Keyed-Alike Information in Appendices.

Dimensions

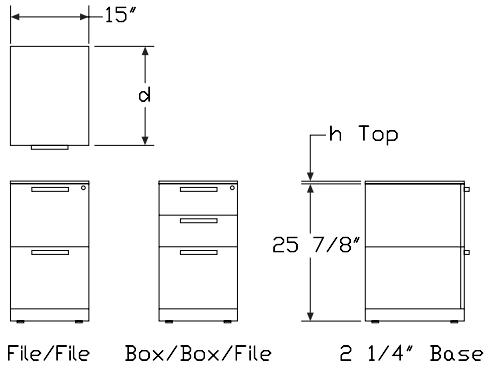

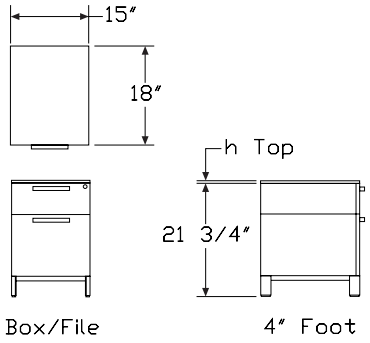

Specification Information

Step 1.

FM10

Step 2. Pull Type

A. arc pull
K. bar pull

Step 3. Depth

18 18" deep
22 22" deep A
28 28" deep A

Step 4. Configuration

For 18" deep (18)

BBF box/box/file
BF box/file
FF file/file

For 22" deep (22) or 28" deep (28)

BBF box/box/file
FF file/file

Step 5. Base/Foot Height

For box/box/file (BBF) or file/file (FF)

2 2 1/4"-high base

For box/file (BF)

2 2 1/4"-high base
4 4"-high foot

Step 6. Front Material

P painted metal front
L laminate front
W veneer front A

Step 7. Top

For box/file (BF) with painted metal front (P) or laminate front (L)

03 3/8" laminate top
04 3/8" veneer top A

For box/file (BF) with veneer front (W)

04 3/8" veneer top A

Metal Freestanding Pedestal

continued

For box/box/file (BBF) or file/file (FF) with painted metal front (P) or laminate front (L)

03	3/8" laminate top
04	3/8" veneer top [A]
06	1 1/4" laminate top
07	1 1/4" veneer top [A]

For box/box/file (BBF) or file/file (FF) with veneer front (W)

04	3/8" veneer top [A]
07	1 1/4" veneer top [A]

Step 8. Lock

L	lock

Prices for Steps 1-8.

		2P03L	2P06L	2P04L	2P07L	2L03L	2L06L
FM10A. 18	**BBF**	$1153	1153	1271	1271	1221	1221
	BF	$1074	—	1194	—	1140	—
	FF	$1122	1122	1241	1241	1189	1189
22	**BBF**	$1355	1355	1490	1490	1433	1433
	FF	$1318	1318	1455	1455	1398	1398
28	**BBF**	$1386	1386	1522	1522	1462	1462
	FF	$1349	1349	1501	1501	1427	1427

		2L04L	2L07L	2W04L	2W07L	4P03L	4P04L
FM10A. 18	**BBF**	$1340	1340	1744	1744	—	—
	BF	$1258	—	1654	—	1338	1474
	FF	$1308	1308	1603	1603	—	—
22	**BBF**	$1570	1570	1981	1981	—	—
	FF	$1535	1535	1842	1842	—	—
28	**BBF**	$1600	1600	2205	2205	—	—
	FF	$1564	1564	2079	2079	—	—

		4L03L	4L04L	4W04L
FM10A. 18	**BF**	$1413	1550	2003

		2P03L	2P06L	2P04L	2P07L	2L03L	2L06L
FM10K. 18	**BBF**	$1153	1153	1308	1308	1221	1221
	BF	$1074	—	1229	—	1140	—
	FF	$1122	1154	1277	1277	1189	1189
22	**BBF**	$1355	1355	1534	1534	1433	1433
	FF	$1318	1318	1497	1497	1398	1398
28	**BBF**	$1386	1386	1566	1566	1462	1505
	FF	$1349	1388	1545	1545	1468	1468

		2L04L	2L07L	2W04L	2W07L	4P03L	4P04L
FM10K. 18	**BBF**	$1379	1379	1744	1795	—	—
	BF	$1295	—	1702	—	1338	1517
	FF	$1347	1347	1603	1650	—	—
22	**BBF**	$1616	1616	1981	1981	—	—
	FF	$1579	1579	1842	1842	—	—
28	**BBF**	$1647	1647	2270	2270	—	—
	FF	$1610	1610	2140	2140	—	—

		4L03L	4L04L	4W04L
FM10K. 18	**BF**	$1413	1595	1744

Step 9. Paint/Steel Type

SS	smooth paint on smooth steel	+$0
XS	textured paint on smooth steel	+$0

Step 10. Surface Finish

Metallic Paint

For smooth paint on smooth steel (SS)

CN	metallic champagne	+$0
EH	metallic bronze	+$0
MS	metallic silver	+$0

Sand Texture Paint

For textured paint on smooth steel (XS)

8Q	folkstone grey [A]	+$0
91	white	+$0
98	studio white [A]	+$0
CL	cool grey neutral	+$0
G1	graphite	+$0
WL	sandstone [A]	+$0
WN	warm grey neutral	+$0

Step 11. Front Finish

Solid-Color Laminate

For laminate front (L)

8Q	folkstone grey [A]	+$0
91	white	+$0
98	studio white	+$0
CL	cool grey neutral [A]	+$0
LU	soft white [A]	+$0
WL	sandstone [A]	+$0
WN	warm grey neutral	+$0

Metal Freestanding Pedestal

continued

Linen Laminate

For laminate front (L)

LBM	crisp linen	+$0
LBN	classic linen	+$0
LBP	casual linen	+$0

Mesh Laminate

For laminate front (L)

LBK	pewter mesh	+$0
LBL	steel mesh	+$0

Twill Laminate

For laminate front (L)

LBF	neutral twill	+$0
LBG	sarum twill	+$0
LBH	earthen twill	+$0
LBJ	graphite twill	+$0
LBQ	white twill	+$0

Wood-Grain Laminate

For laminate front (L)

HM	natural maple	+$0
HP	light anigre A	+$0
LBA	clear on ash	+$0
LBR	phantom ecru	+$0
LBS	phantom cocoa	+$0
LBU	medium matte walnut	+$0
LBV	warm grey teak	+$0
LBB	oak on ash	+$0
LBC	walnut on ash	+$0
LBD	dark brown walnut	+$0
LBE	medium red walnut	+$0
76	light brown walnut A	+$0
HX	aged cherry	+$0
HY	walnut on cherry A	+$0

Wood Veneer

For veneer front (W)

2U	light brown walnut A	+$0
40	dark brown walnut A	+$0
ED	aged cherry A	+$0
EK	medium red walnut A	+$0
EW	medium matte walnut A	+$0
ET	clear on ash A	+$0
EU	oak on ash A	+$0
EV	walnut on ash A	+$0
UL	natural maple A	+$0
UX	walnut on cherry A	+$0

Step 12. Top Finish

Solid-Color Laminate

For 3/8" laminate top (03) or 1 1/4" laminate top (06)

8Q	folkstone grey A	+$0
91	white	+$0
98	studio white	+$0
CL	cool grey neutral A	+$0
LU	soft white A	+$0
WL	sandstone A	+$0
WN	warm grey neutral	+$0

Linen Laminate

For 3/8" laminate top (03) or 1 1/4" laminate top (06)

LBM	crisp linen	+$0
LBN	classic linen	+$0
LBP	casual linen	+$0

Mesh Laminate

For 3/8" laminate top (03) or 1 1/4" laminate top (06)

LBK	pewter mesh	+$0
LBL	steel mesh	+$0

Twill Laminate

For 3/8" laminate top (03) or 1 1/4" laminate top (06)

LBF	neutral twill	+$0
LBG	sarum twill	+$0
LBH	earthen twill	+$0
LBJ	graphite twill	+$0
LBQ	white twill	+$0

Metal Freestanding Pedestal

continued

Wood-Grain Laminate

For 3/8" laminate top (03) or 1 1/4" laminate top (06)

HM	natural maple	+$0
HP	light anigre A	+$0
LBA	clear on ash	+$0
LBR	phantom ecru	+$0
LBS	phantom cocoa	+$0
LBU	medium matte walnut	+$0
LBV	warm grey teak	+$0
LBB	oak on ash	+$0
LBC	walnut on ash	+$0
LBD	dark brown walnut	+$0
LBE	medium red walnut	+$0
76	light brown walnut A	+$0
HX	aged cherry	+$0
HY	walnut on cherry A	+$0

Wood Veneer

For 3/8" veneer top (04) or 1 1/4" veneer top (07)

2U	light brown walnut A	+$0
40	dark brown walnut A	+$0
ED	aged cherry A	+$0
EK	medium red walnut A	+$0
EW	medium matte walnut A	+$0
ET	clear on ash A	+$0
EU	oak on ash A	+$0
EV	walnut on ash A	+$0
UL	natural maple A	+$0
UX	walnut on cherry A	+$0

Step 13. Base Finish

For 4"-high foot (4)

Sand Texture Paint

8Q	folkstone grey A	+$0
91	white A	+$0
98	studio white A	+$0
BK	black A	+$0
CL	cool grey neutral A	+$0
G1	graphite A	+$0
WL	sandstone A	+$0
WN	warm grey neutral A	+$0

Metallic Paint

CN	metallic champagne	+$0
EH	metallic bronze	+$0
MS	metallic silver	+$0

Step 14. Pull Finish

For arc pull (A.)

NH	brushed nickel	+$0
NK	black nickel A	+$0

Metallic Paint

For bar pull (K.)

CN	metallic champagne	+$0
MS	metallic silver	+$0

Sand Texture Paint

For bar pull (K.)

79	green apple	+$15
BK	black	+$0
MY3	yellow oxide	+$15
RO	red	+$15
TRQ	turquoise	+$15

Smooth Paint

For bar pull (K.)

8Q	folkstone grey	+$0
91	white	+$0
98	studio white	+$0
G1	graphite	+$0
WL	sandstone	+$0

Step 15. Counterweight

NO	no counterweight	+$0
CB	counterweight	+$88

Step 16. Lock Option

KA	keyed alike	-$10
KC	keyed differently, chrome	+$0
KD	keyed differently, black	+$0

Metal Mobile Pedestal

FM11A.
FM11K.

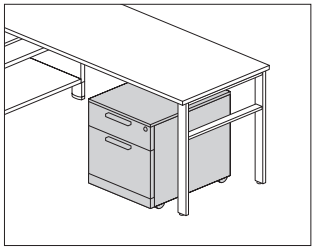

Product Information

Description

This pedestal has a 3/8"-high laminate or veneer top and a painted steel case with a painted, laminate, or veneer front. It has concealed casters and full-extension ball-bearing slides on the drawers. File drawers accommodate front-to-back filing of letter-size hanging files.

Actual pedestal depth is 17 7/8".

Notes

For additional product options, see Vary Easy Program® in Appendices.

Arc pull option (A.) conforms to guidelines of Americans with Disabilities Act (ADA).

Grain direction is vertical on veneer and wood-grain laminate fronts.

For keyed-alike locks, see Keyed-Alike Information in Appendices.

Dimensions

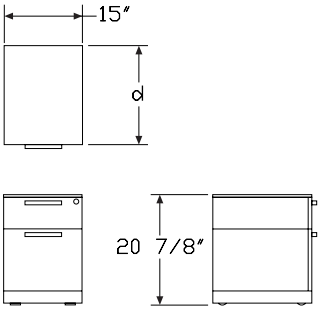

Specification Information

Step 1.

FM11

Step 2. Pull Type

A. arc pull
K. bar pull

Step 3. Depth

18 18" deep

Step 4. Configuration

BF box/file

Step 5. Front Material

P painted metal front
L laminate front
W veneer front A

Step 6. Top

For box/file (BF) with painted metal front (P) or laminate front (L)

03 3/8" laminate top
04 3/8" veneer top A

For box/file (BF) with veneer front (W)

04 3/8" veneer top A

Step 7. Lock

L lock

Prices for Steps 1-7.

	P03L	P04L	L03L	L04L	W04L
FM11A. 18 BF	$1137	1293	1202	1359	1768
FM11K. 18 BF	$1137	1256	1202	1321	1717

Step 8. Paint/Steel Type

SS smooth paint on smooth steel +$0
XS textured paint on smooth steel +$0

Step 9. Surface Finish

Metallic Paint

For smooth paint on smooth steel (SS)

CN	metallic champagne	+$0
EH	metallic bronze	+$0
MS	metallic silver	+$0

Sand Texture Paint

For textured paint on smooth steel (XS)

8Q	folkstone grey A	+$0
91	white	+$0
98	studio white A	+$0
BK	black	+$0
CL	cool grey neutral	+$0
G1	graphite	+$0
WL	sandstone A	+$0
WN	warm grey neutral	+$0

Step 10. Front Finish

Solid-Color Laminate

For laminate front (L)

8Q	folkstone grey A	+$0
91	white	+$0
98	studio white	+$0
CL	cool grey neutral A	+$0
LU	soft white A	+$0
WL	sandstone A	+$0
WN	warm grey neutral	+$0

Linen Laminate

For laminate front (L)

LBM	crisp linen	+$0
LBN	classic linen	+$0
LBP	casual linen	+$0

Mesh Laminate

For laminate front (L)

LBK	pewter mesh	+$0
LBL	steel mesh	+$0

Twill Laminate

For laminate front (L)

LBF	neutral twill	+$0
LBG	sarum twill	+$0
LBH	earthen twill	+$0
LBJ	graphite twill	+$0
LBQ	white twill	+$0

Wood-Grain Laminate

For laminate front (L)

HM	natural maple	+$0
HP	light anigre A	+$0
LBA	clear on ash	+$0
LBR	phantom ecru	+$0
LBS	phantom cocoa	+$0
LBU	medium matte walnut	+$0
LBV	warm grey teak	+$0
LBB	oak on ash	+$0
LBC	walnut on ash	+$0
LBD	dark brown walnut	+$0
LBE	medium red walnut	+$0
76	light brown walnut A	+$0
HX	aged cherry	+$0
HY	walnut on cherry A	+$0

Wood Veneer

For veneer front (W)

2U	light brown walnut A	+$0
40	dark brown walnut A	+$0
ED	aged cherry A	+$0
EK	medium red walnut A	+$0
EW	medium matte walnut A	+$0
ET	clear on ash A	+$0
EU	oak on ash A	+$0
EV	walnut on ash A	+$0
UL	natural maple A	+$0
UX	walnut on cherry A	+$0

Step 11. Top Finish

Solid-Color Laminate

For 3/8" laminate top (03)

8Q	folkstone grey [A]	+$0
91	white	+$0
98	studio white	+$0
CL	cool grey neutral [A]	+$0
LU	soft white [A]	+$0
WL	sandstone [A]	+$0
WN	warm grey neutral	+$0

Linen Laminate

For 3/8" laminate top (03)

LBM	crisp linen	+$0
LBN	classic linen	+$0
LBP	casual linen	+$0

Mesh Laminate

For 3/8" laminate top (03)

LBK	pewter mesh	+$0
LBL	steel mesh	+$0

Twill Laminate

For 3/8" laminate top (03)

LBF	neutral twill	+$0
LBG	sarum twill	+$0
LBH	earthen twill	+$0
LBJ	graphite twill	+$0
LBQ	white twill	+$0

Wood-Grain Laminate

For 3/8" laminate top (03)

HM	natural maple	+$0
HP	light anigre [A]	+$0
LBA	clear on ash	+$0
LBR	phantom ecru	+$0
LBS	phantom cocoa	+$0
LBU	medium matte walnut	+$0
LBV	warm grey teak	+$0
LBB	oak on ash	+$0
LBC	walnut on ash	+$0
LBD	dark brown walnut	+$0
LBE	medium red walnut	+$0
76	light brown walnut [A]	+$0
HX	aged cherry	+$0
HY	walnut on cherry [A]	+$0

Wood Veneer

For 3/8" veneer top (04)

2U	light brown walnut [A]	+$0
40	dark brown walnut [A]	+$0
ED	aged cherry [A]	+$0
EK	medium red walnut [A]	+$0
EW	medium matte walnut [A]	+$0
ET	clear on ash [A]	+$0
EU	oak on ash [A]	+$0
EV	walnut on ash [A]	+$0
UL	natural maple [A]	+$0
UX	walnut on cherry [A]	+$0

Step 12. Pull Finish

For arc pull (A.)

NH	brushed nickel	+$0
NK	black nickel [A]	+$0

For bar pull (K.)

CN	metallic champagne	+$0
MS	metallic silver	+$0

For bar pull (K.)

BK	black	+$0
79	green apple	+$15
MY3	yellow oxide	+$15
RO	red	+$15
TRQ	turquoise	+$15

For bar pull (K.)

8Q	folkstone grey	+$0
91	white	+$0
98	studio white	+$0
G1	graphite	+$0
WL	sandstone	+$0

Step 13. Lock Option

KA	keyed alike	-$10
KC	keyed differently, chrome	+$0
KD	keyed differently, black	+$0

Pedestal Cushion Top FM893.

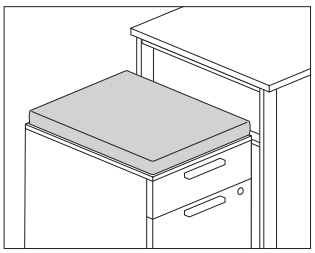

Product Information

Description

This cushion attaches to the top of a freestanding or mobile pedestal to provide temporary guest seating. Attachment hardware included.

Notes

Pedestal cushion accepts Customer's Own Material (COM). Yardage is estimated for nondirectional, 54"-wide fabrics. Order 1/2 yard of fabric per cushion. For odd number of cushions, round up to next full yard. For information on multiple quantities or directional fabrics, contact COM Department. See Order Information in Appendices.

Dimensions

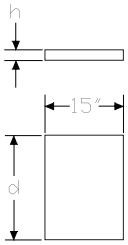

Specification Information

Step 1.

FM893. A

Step 2. Height

01 1" high A

02 2" high A

Step 3. Depth

18 18" deep A

Prices for Steps 1-3.

	18
FM893. 01	$155
02	$175

Step 4. Fabric

See application chart and textiles list for fabric usage and numbers. First 2 digits of number indicate fabric line; remaining digit(s) indicate fabric color.

Price Category 1	+$0
Price Category 2	+$43
Price Category 3	+$60
Price Category 4	+$79
Price Category 7 A	+$144
Price Category 9	+$956
Price Category B	+$29
Price Category E	+$61
Price Category G	+$103
Price Category H	+$125

Pencil Tray for Box Drawer FM924.

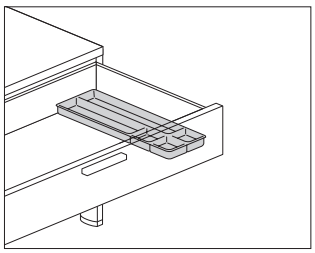

Product Information

Description

This plastic tray provides storage for pencils and other small items in a pedestal or credenza box drawer. Finish is black umber.

Dimensions

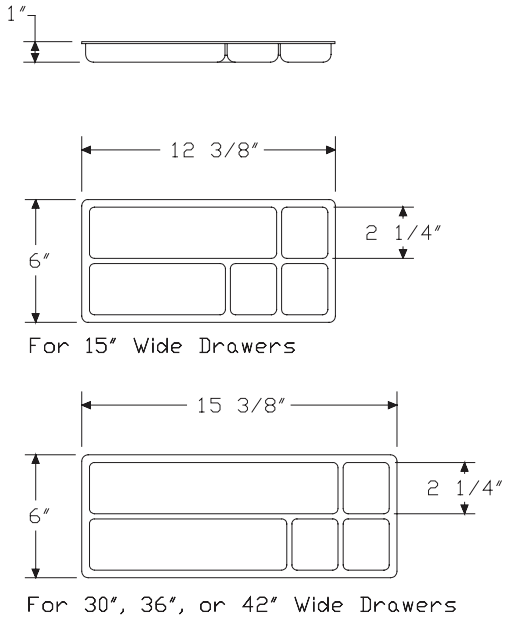

Specification Information

Step 1.

FM924.

Step 2. Width

P	for 15″-wide pedestal drawer
C	for 30″-, 36″-, or 42″-wide low credenza drawer

Prices for Steps 1-2.

FM924. P		$27
	C	$32

Step 3. Finish

BU	black umber	+$0

Drawer Divider for Box Drawer FM925.

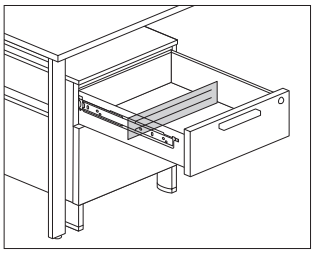

Product Information

Description

This adjustable divider fits into a metal pedestal box drawer to provide separation of items. Finish is black umber.

Dimensions

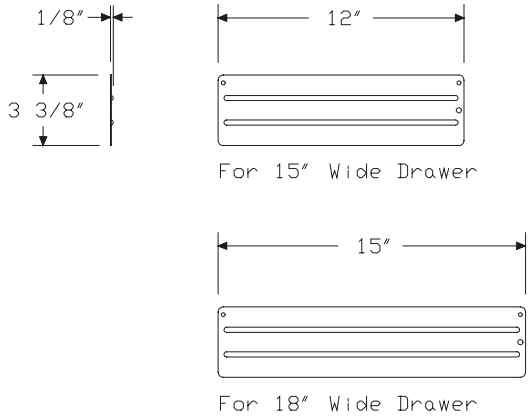

Specification Information

Step 1.

FM925.	$20

Drawer Organizer Kit FM926.

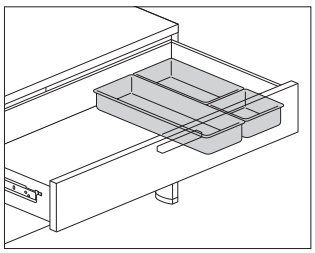

Product Information

Description

This kit has 3 plastic bins that fit into the upper drawer of a metal low credenza to provide organization and small item storage.

Notes

Kit contains 1 each of the following:

- $4^{9}/_{16}$" x $4^{9}/_{16}$" container
- $4^{9}/_{16}$" x $9^{3}/_{16}$" container
- $4^{9}/_{16}$" x $13^{13}/_{16}$" container

Dimensions

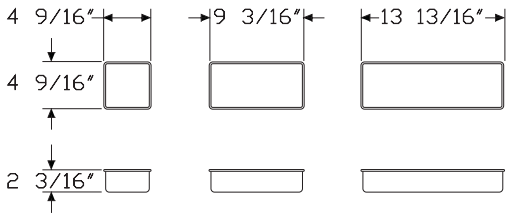

Specification Information

Step 1.

FM926.	$85

Step 2. Finish

91	white	+$0

Stationary Tray for Box Drawer FM927.

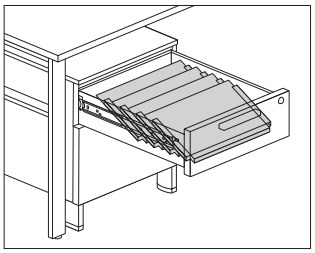

Product Information

Description

This sectioned tray stores envelopes, stationary, and forms in a metal pedestal box drawer. Finish is black umber.

Dimensions

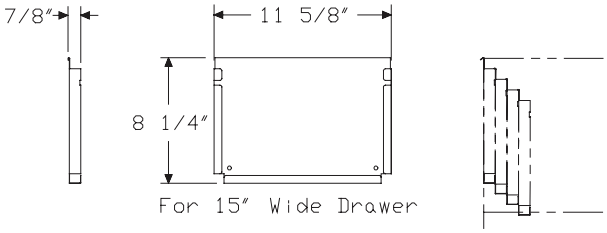

Specification Information

Step 1.

FM927.	$135

File Compressor FM928.

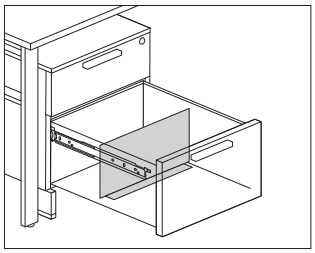

Product Information

Description

This compressor fits into a metal pedestal file drawer. Finish is black umber.

Dimensions

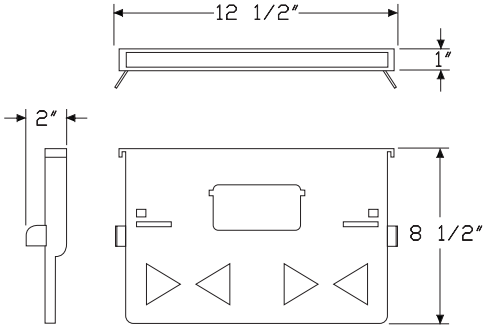

Specification Information

Step 1.

FM928.	$40

File Drawer Organizer FM923.

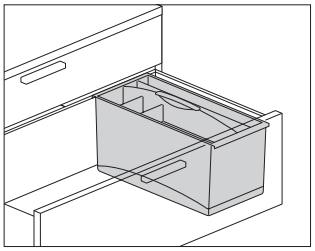

Product Information

Description

This 2-piece plastic organizer fits into any file drawer configured for letter-size filing. It has a removable top tray with sections for storing small items, and a bottom bin that can hold larger items or be divided into 3 sections; 2 vertical dividers included. Finish is black umber.

Dimensions

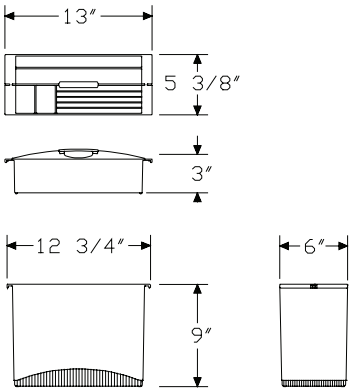

Specification Information

Step 1.

FM923.	$86

Metal Low Credenza, Open FM700.

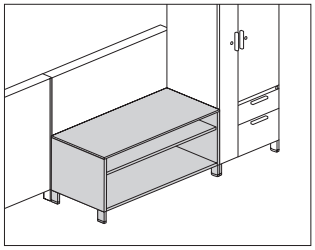

Product Information

Description

This credenza provides open storage and can be used freestanding or attached to a Canvas wall-based frame to support a frame run. It can also be used to support 1 end of a surface. The credenza has a 3/8"-high or 1 1/4"-high laminate or veneer top and a painted steel case. It is available with 4"-high architectural feet, 4"-high sleeveless architectural feet or a 2 1/4"-high base with 1" leveling glides.

Actual credenza widths are 29 7/8", 35 7/8", 41 7/8", 47 3/4", or 59 3/4"; actual depth is 19 7/8".

Notes

For additional product options, see Vary Easy Program in Appendices.

30"-, 36"-, and 42"-wide credenzas have no center divider and include 1 adjustable shelf. 48"- and 60"-wide credenzas have a center divider and include 2 adjustable shelves. Shelves adjust in 1 1/4" increments.

Order optional metal credenza shelf (FM892.) separately.

Credenza with 4"-high foot option (4) and 3/8" thin top can be used to support a Canvas wall-based frame. Order support bracket, low credenza-to-frame (FT292.) separately.

When using credenza to support 1 end of a surface, order 1 of the following products separately:

- Surface support, low credenza, adjustable height (FT299.)
- Surface support, low credenza, fixed height (FT298.)

To cover adjacent credenzas with a single top, specify credenzas with no top option (NT) and order credenza top (FM890.) separately.

1 1/4" top (06 and 07) is not removable and cannot be used to support a Canvas wall-based frame. The 1 1/4" top will add 5/8" to overall height of unit.

Please note that on the 4" sleeveless architectural foot (5) glides will be more visible.

To provide temporary guest seating on a credenza, order cushion top (FF891.) separately.

Dimensions

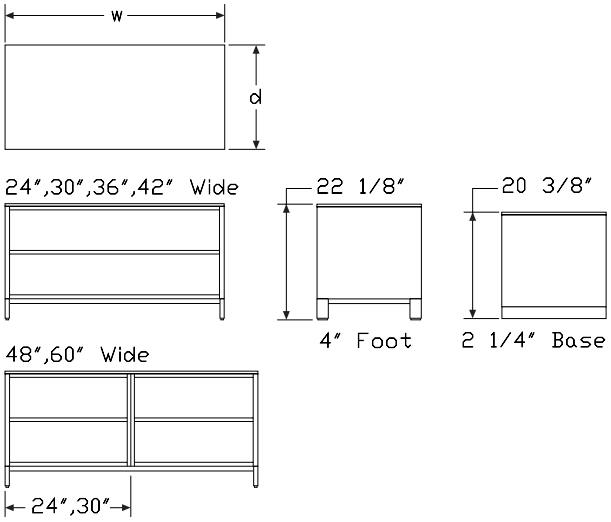

Specification Information

Step 1.

FM700.

Step 2. Width

30	30" wide
36	36" wide
42	42" wide
48	48" wide A
60	60" wide A

Step 3. Depth

20	20" deep

Step 4. Base/Foot Height

2	2 1/4"-high base
4	4"-high foot
5	4" -high foot sleeveless A

Step 5. Top

NT	no top
03	3/8" laminate top
04	3/8" veneer top A
06	1 1/4" laminate top
07	1 1/4" veneer top A

Prices for Steps 1-5.

			2NT	203	204	206	207	4NT
FM700.	**30**	**20**	$1192	1322	1577	1196	1452	1391
	36	**20**	$1285	1413	1669	1290	1545	1489
	42	**20**	$1425	1556	1811	1431	1651	1523
	48	**20**	$1540	1849	2184	1446	1758	1849
	60	**20**	$2000	2148	2440	1863	2157	2184

			403	404	406	407	5NT	503
FM700.	**30**	**20**	$1528	1804	1395	1670	1323	1462
	36	**20**	$1628	1905	1494	1637	1424	1561
	42	**20**	$1651	1906	1526	1783	1460	1589
	48	**20**	$2034	2369	1746	2080	1776	1962
	60	**20**	$2329	2624	2046	2341	2113	2258

			504	506	507
FM700.	**30**	**20**	$1737	1328	1603
	36	**20**	$1838	1428	1569
	42	**20**	$1845	1465	1721
	48	**20**	$2297	1674	2008
	60	**20**	$2552	1974	2269

Step 6. Paint/Steel Type

SS	smooth paint on smooth steel	+$0
XS	textured paint on smooth steel	+$0

Step 7. Surface Finish

Metallic Paint

For smooth paint on smooth steel (SS)

CN	metallic champagne	+$0
EH	metallic bronze	+$0
MS	metallic silver	+$0

Sand Texture Paint

For textured paint on smooth steel (XS)

8Q	folkstone grey A	+$0
91	white	+$0
98	studio white A	+$0
BK	black	+$0
CL	cool grey neutral	+$0
G1	graphite	+$0
WL	sandstone A	+$0
WN	warm grey neutral	+$0

Step 8. Top Finish

Solid-Color Laminate

For 3/8" laminate top (03) or 1 1/4" laminate top (06)

8Q	folkstone grey A	+$0
91	white	+$0
98	studio white	+$0
CL	cool grey neutral A	+$0
LU	soft white A	+$0
WL	sandstone A	+$0
WN	warm grey neutral	+$0

Linen Laminate

For 3/8" laminate top (03) or 1 1/4" laminate top (06)

LBM	crisp linen	+$0
LBN	classic linen	+$0
LBP	casual linen	+$0

Mesh Laminate

For 3/8" laminate top (03) or 1 1/4" laminate top (06)

LBK	pewter mesh	+$0
LBL	steel mesh	+$0

Twill Laminate

For 3/8" laminate top (03) or 1 1/4" laminate top (06)

LBF	neutral twill	+$0
LBG	sarum twill	+$0
LBH	earthen twill	+$0
LBJ	graphite twill	+$0
LBQ	white twill	+$0

Wood-Grain Laminate

For 3/8" laminate top (03) or 1 1/4" laminate top (06)

HM	natural maple	+$0
HP	light anigre A	+$0
LBA	clear on ash	+$0
LBR	phantom ecru	+$0
LBS	phantom cocoa	+$0
LBU	medium matte walnut	+$0
LBV	warm grey teak	+$0
LBB	oak on ash	+$0
LBC	walnut on ash	+$0
LBD	dark brown walnut	+$0
LBE	medium red walnut	+$0
76	light brown walnut A	+$0
HX	aged cherry	+$0
HY	walnut on cherry A	+$0

Wood Veneer

For 3/8" veneer top (04) or 1 1/4" veneer top (07)

2U	light brown walnut A	+$0
40	dark brown walnut A	+$0
ED	aged cherry A	+$0
EK	medium red walnut A	+$0
EW	medium matte walnut A	+$0
ET	clear on ash A	+$0
EU	oak on ash A	+$0
EV	walnut on ash A	+$0
UL	natural maple A	+$0
UX	walnut on cherry A	+$0

Step 9. Base Finish

For 4"-high foot (4) or 4" -high foot sleeveless (5)

Metallic Paint

CN	metallic champagne	+$0
EH	metallic bronze	+$0
MS	metallic silver	+$0

Sand Texture Paint

8Q	folkstone grey A	+$0
91	white A	+$0
98	studio white A	+$0
BK	black A	+$0
CL	cool grey neutral A	+$0
G1	graphite A	+$0
WN	warm grey neutral A	+$0

Metal Low Credenza, with Doors FM71A. FM71K.

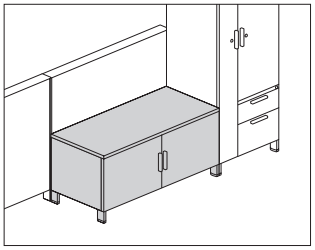

Product Information

Description

This credenza provides enclosed storage and can be used freestanding or attached to a Canvas wall-based frame to support a frame run. It can also be used to support 1 end of a surface. The credenza has a 3/8"-high or 1 1/4"-high laminate or veneer top and a painted steel case. It is available with 4"-high architectural feet, 4"-high sleeveless architectural feet or a 2 1/4"-high base with 1" leveling glides.

Actual credenza widths are 29 7/8", 35 7/8", or 41 7/8"; actual depth is 19 7/8".

Notes

For additional product options, see Vary Easy Program in Appendices.

Arc pull option (A.) conforms to guidelines of Americans with Disabilities Act (ADA).

Grain direction is vertical on veneer and wood-grain laminate fronts.

30"-, 36"-, and 42"-wide credenzas have no center divider and include 1 adjustable shelf. Shelves adjust in 1 1/4" increments.

Order optional metal credenza shelf (FM892.) separately.

Credenza with 4"-high foot option (4) and 3/8" thin top can be used to support a Canvas wall-based frame. Order support bracket, low credenza-to-frame (FT292.) separately.

When using credenza to support 1 end of a surface, order 1 of the following products separately:

- Surface support, low credenza, adjustable height (FT299.)
- Surface support, low credenza, fixed height (FT298.)

To cover adjacent credenzas with a single top, specify credenzas with no top option (NT) and order credenza top (FM890.) separately.

1 1/4" top (06 and 07) is not removable and cannot be used to support a Canvas wall-based frame. The 1 1/4" top will add 5/8" to overall height of unit.

Please note that on the 4" sleeveless architectural foot (5) glides will be more visible.

To provide temporary guest seating on a credenza, order cushion top (FF891.) separately.

For keyed-alike locks, see Keyed-Alike Information in Appendices.

Dimensions

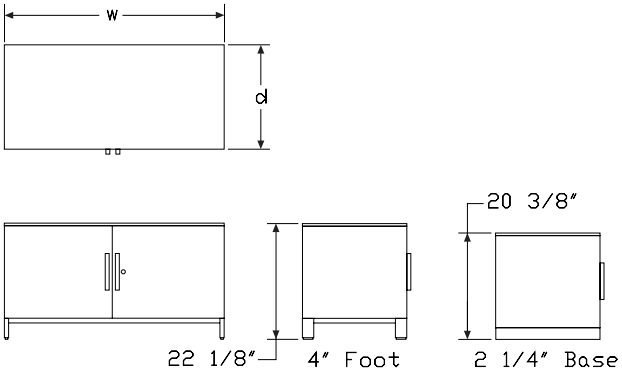

Metal Low Credenza, with Doors

continued

Specification Information

Step 1.

FM71 A

Step 2. Pull Type

A. arc pull A
K. bar pull A

Step 3. Width

30 30″ wide A
36 36″ wide A
42 42″ wide A

Step 4. Depth

20 20″ deep A

Step 5. Base/Foot Height

2 2¼″-high base A
4 4″-high foot A
5 4″ -high foot sleeveless A

Step 6. Front Material

P painted metal front A
L laminate front A
W veneer front A

Step 7. Top

For painted metal front (P) or laminate front (L)

NT no top A
03 ⅜″ laminate top A
04 ⅜″ veneer top A
06 1¼″ laminate top A
07 1¼″ veneer top A

For veneer front (W)

NT no top A
04 ⅜″ veneer top A
07 1¼″ veneer top A

Step 8. Lock

L lock A

Prices for Steps 1-8.

	2PNTL	2P03L	2P04L	2P06L	2P07L	2LNTL
FM71A. 30 20	$1347	1549	1736	1353	1612	1497
36 20	$1515	1642	1811	1518	1693	1604
42 20	$1647	1769	2014	1650	1895	1829

	2L03L	2L04L	2L06L	2L07L	2WNTL	2W04L
FM71A. 30 20	$1705	1885	1501	1760	2200	2589
36 20	$1727	1972	1610	1853	2359	2724
42 20	$1949	2196	1832	2078	2819	3054

	2W07L	4PNTL	4P03L	4P04L	4P06L	4P07L
FM71A. 30 20	$2462	1426	1631	1813	1499	1688
36 20	$2605	1572	1698	1951	1577	1830
42 20	$2937	1737	1952	2105	1742	1987

	4LNTL	4L03L	4L04L	4L06L	4L07L	4WNTL
FM71A. 30 20	$1659	1711	1971	1587	1847	2394
36 20	$1746	1872	2123	1749	2001	2521
42 20	$1934	2056	2301	1938	2182	2794

	4W04L	4W07L	5PNTL	5P03L	5P04L	5P06L
FM71A. 30 20	$2673	2549	1363	1491	1751	1366
36 20	$2900	2778	1512	1637	1889	1516
42 20	$3158	3041	1679	1801	2046	1683

	5P07L	5LNTL	5L03L	5L04L	5L06L	5L07L
FM71A. 30 20	$1626	1519	1650	1909	1524	1783
36 20	$1769	1685	1810	2062	1690	1941
42 20	$1928	1875	1996	2242	1879	2123

	5WNTL	5W04L	5W07L
FM71A. 30 20	$2222	2613	2487
36 20	$2460	2839	2718
42 20	$2734	3099	2982

	2PNTL	2P03L	2P04L	2P06L	2P07L	2LNTL
FM71K. 30 20	$1412	1549	1821	1419	1690	1570
36 20	$1515	1642	1899	1518	1775	1682
42 20	$1727	1855	2112	1730	1988	1918

	2L03L	2L04L	2L06L	2L07L	2WNTL	2W04L
FM71K. 30 20	$1705	1977	1574	1846	2307	2715
36 20	$1811	2068	1688	1943	2474	2856
42 20	$2044	2303	1921	2179	2819	3203

	2W07L	4PNTL	4P03L	4P04L	4P06L	4P07L
FM71K. 30 20	$2582	1495	1631	1901	1499	1770
36 20	$2732	1649	1780	2045	1654	1919
42 20	$3080	1822	1952	2208	1826	2083

Metal Low Credenza, with Doors

continued

	4LNTL	4L03L	4L04L	4L06L	4L07L	4WNTL
FM71K.30 20	$1659	1795	2067	1664	1936	2394
36 20	$1831	1962	2226	1834	2099	2644
42 20	$2028	2155	2413	2032	2288	2929

	4W04L	4W07L	5PNTL	5P03L	5P04L	5P06L
FM71K.30 20	$2803	2673	1429	1564	1836	1433
36 20	$3041	2913	1585	1716	1981	1590
42 20	$3312	3189	1761	1888	2146	1765

	5P07L	5LNTL	5L03L	5L04L	5L06L	5L07L
FM71K.30 20	$1705	1593	1730	2002	1468	1870
36 20	$1855	1767	1898	2162	1772	2036
42 20	$2021	1966	2093	2351	1970	2226

	5WNTL	5W04L	5W07L
FM71K.30 20	$2330	2740	2608
36 20	$2579	2977	2850
42 20	$2867	3250	3127

Step 9. Paint/Steel Type

SS	smooth paint on smooth steel A	+$0
XS	textured paint on smooth steel A	+$0

Step 10. Surface Finish

Metallic Paint

For smooth paint on smooth steel (SS)

CN	metallic champagne A	+$0
EH	metallic bronze A	+$0
MS	metallic silver A	+$0

Sand Texture Paint

For textured paint on smooth steel (XS)

8Q	folkstone grey A	+$0
91	white A	+$0
98	studio white A	+$0
BK	black A	+$0
CL	cool grey neutral A	+$0
G1	graphite A	+$0
WL	sandstone A	+$0
WN	warm grey neutral A	+$0

Step 11. Front Finish

Solid-Color Laminate

For laminate front (L)

8Q	folkstone grey A	+$0
91	white A	+$0
98	studio white	+$0
CL	cool grey neutral A	+$0
LU	soft white A	+$0
WL	sandstone A	+$0
WN	warm grey neutral A	+$0

Linen Laminate

For laminate front (L)

LBM	crisp linen	+$0
LBN	classic linen	+$0
LBP	casual linen	+$0

Mesh Laminate

For laminate front (L)

LBK	pewter mesh	+$0
LBL	steel mesh	+$0

Twill Laminate

For laminate front (L)

LBF	neutral twill	+$0
LBG	sarum twill	+$0
LBH	earthen twill	+$0
LBJ	graphite twill	+$0
LBQ	white twill	+$0

Wood-Grain Laminate

For laminate front (L)

HM	natural maple A	+$0
HP	light anigre A	+$0
LBA	clear on ash	+$0
LBR	phantom ecru	+$0
LBS	phantom cocoa	+$0
LBU	medium matte walnut	+$0
LBV	warm grey teak	+$0
LBB	oak on ash	+$0
LBC	walnut on ash	+$0
LBD	dark brown walnut	+$0
LBE	medium red walnut	+$0
76	light brown walnut A	+$0
HX	aged cherry A	+$0
HY	walnut on cherry A	+$0

Metal Low Credenza, with Doors

continued

Wood Veneer

For veneer front (W)

2U	light brown walnut A	+$0
40	dark brown walnut A	+$0
ED	aged cherry A	+$0
EK	medium red walnut A	+$0
EW	medium matte walnut A	+$0
ET	clear on ash A	+$0
EU	oak on ash A	+$0
EV	walnut on ash A	+$0
UL	natural maple A	+$0
UX	walnut on cherry A	+$0

Step 12. Top Finish

Solid-Color Laminate

For 3/8" laminate top (03) or 1 1/4" laminate top (06)

8Q	folkstone grey A	+$0
91	white A	+$0
98	studio white	+$0
CL	cool grey neutral A	+$0
LU	soft white A	+$0
WL	sandstone A	+$0
WN	warm grey neutral A	+$0

Linen Laminate

For 3/8" laminate top (03) or 1 1/4" laminate top (06)

LBM	crisp linen	+$0
LBN	classic linen	+$0
LBP	casual linen	+$0

Mesh Laminate

For 3/8" laminate top (03) or 1 1/4" laminate top (06)

LBK	pewter mesh	+$0
LBL	steel mesh	+$0

Twill Laminate

For 3/8" laminate top (03) or 1 1/4" laminate top (06)

LBF	neutral twill	+$0
LBG	sarum twill	+$0
LBH	earthen twill	+$0
LBJ	graphite twill	+$0
LBQ	white twill	+$0

Wood-Grain Laminate

For 3/8" laminate top (03) or 1 1/4" laminate top (06)

HM	natural maple A	+$0
HP	light anigre A	+$0
LBA	clear on ash	+$0
LBR	phantom ecru	+$0
LBS	phantom cocoa	+$0
LBU	medium matte walnut	+$0
LBV	warm grey teak	+$0
LBB	oak on ash	+$0
LBC	walnut on ash	+$0
LBD	dark brown walnut	+$0
LBE	medium red walnut	+$0
76	light brown walnut A	+$0
HX	aged cherry A	+$0
HY	walnut on cherry A	+$0

Wood Veneer

For 3/8" veneer top (04) or 1 1/4" veneer top (07)

2U	light brown walnut A	+$0
40	dark brown walnut A	+$0
ED	aged cherry A	+$0
EK	medium red walnut A	+$0
EW	medium matte walnut A	+$0
ET	clear on ash A	+$0
EU	oak on ash A	+$0
EV	walnut on ash A	+$0
UL	natural maple A	+$0
UX	walnut on cherry A	+$0

Step 13. Base Finish

For 4"-high foot (4) or 4" -high foot sleeveless (5)

Sand Texture Paint

8Q	folkstone grey A	+$0
91	white A	+$0
98	studio white A	+$0
BK	black A	+$0
CL	cool grey neutral A	+$0
G1	graphite A	+$0
WL	sandstone A	+$0
WN	warm grey neutral A	+$0

Metallic Paint

CN	metallic champagne A	+$0
EH	metallic bronze A	+$0
MS	metallic silver A	+$0

Metal Low Credenza, with Doors

continued

Step 14. Pull Finish		
For arc pull (A.)		
NH	brushed nickel A	+$0
NK	black nickel A	+$0
Metallic Paint		
For bar pull (K.)		
CN	metallic champagne A	+$0
MS	metallic silver A	+$0
Sand Texture Paint		
For bar pull (K.)		
BK	black A	+$0
79	green apple A	+$15
MY3	yellow oxide A	+$15
RO	red A	+$15
TRQ	turquoise A	+$15
Smooth Paint		
For bar pull (K.)		
8Q	folkstone grey A	+$0
91	white A	+$0
98	studio white A	+$0
G1	graphite A	+$0
WL	sandstone A	+$0

Step 15. Lock Option		
KA	keyed alike A	-$10
KC	keyed differently, chrome A	+$0
KD	keyed differently, black A	+$0

Metal Low Credenza, with Drawers

FM72A.
FM72K.

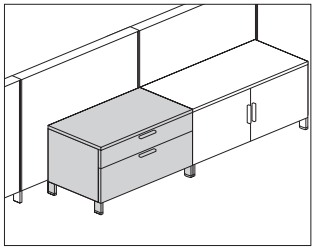

Product Information

Description

This credenza provides enclosed filing and storage and can be used freestanding or attached to a Canvas wall-based frame to support a frame run. It has a 3/8"-high or 1 1/4"-high laminate or veneer top and a painted steel case. It is available with 4"-high architectural feet, 4"-high sleeveless architectural feet or a 2 1/4"-high base with 1" leveling glides. The credenza has a positive interlock system that permits only 1 drawer to open at a time. Drawers have full-extension ball-bearing slides. The file drawer accommodates front-to-back filing of letter-, legal, and A4-size hanging files.

Actual credenza widths are 29 7/8", 35 7/8", 41 7/8", 59 3/4" or 71 3/4"; actual depth is 19 7/8".

Notes

For additional product options, see Vary Easy Program in Appendices.

Arc pull option (A.) conforms to guidelines of Americans with Disabilities Act (ADA).

File drawers are standard with side-to-side hardware. Order front-to-back rail (FM920.) separately.

Counterweight option (CB) must be specified when a file is not ganged or anchored.

Grain direction is vertical on veneer and wood-grain laminate fronts.

30"-, 36"-, and 42"-wide credenzas have 1 box drawer and 1 file drawer. 60"-and 72"-wide credenzas have 2 box drawers and 2 file drawers.

Credenza with 4"-high foot option (4) and 3/8" thin top can be used to support a Canvas wall-based frame. Order support bracket, low credenza-to-frame (FT292.) separately.

To cover adjacent credenzas with a single top, specify credenzas with no top option (NT) and order credenza top (FM890.) separately.

1 1/4" top (06 and 07) is not removable and cannot be used to support a Canvas wall-based frame. The 1 1/4" top will add 5/8" to overall height of unit.

Please note that on the 4" sleeveless architectural foot (5) glides will be more visible.

To provide temporary guest seating on a credenza, order cushion top (FF891.) separately.

For keyed-alike locks, see Keyed-Alike Information in Appendices.

Dimensions

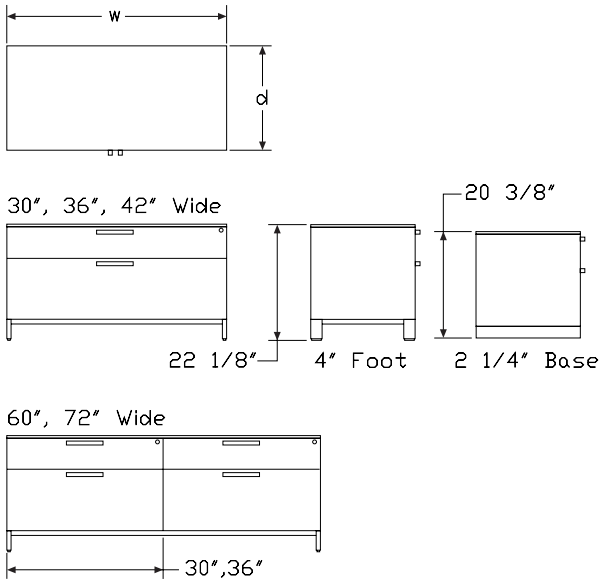

Metal Low Credenza, with Drawers *continued*

Specification Information

Step 1.

FM72

Step 2. Pull Type

A.	arc pull
K.	bar pull

Step 3. Width

30	30" wide
36	36" wide
42	42" wide
60	60" wide
72	72" wide

Step 4. Depth

20	20" deep

Step 5. Base/Foot Height

2	2 1/4"-high base
4	4"-high foot
5	4" -high foot sleeveless A

Step 6. Configuration

BF	box/file

Step 7. Front Material

P	painted metal front
L	laminate front
W	veneer front A

Step 8. Top

For painted metal front (P) or laminate front (L)

NT	no top
03	3/8" laminate top
04	3/8" veneer top A
06	1 1/4" laminate top
07	1 1/4" veneer top A

For veneer front (W)

NT	no top
04	3/8" veneer top A
07	1 1/4" veneer top A

Step 9. Lock

L	lock

Prices for Steps 1-9.

	2BFPNTL	2BFP03L	2BFP04L	2BFP06L	2BFP07L	2BFLNTL
FM72A. 30 20	$1525	1645	1920	1558	1802	1665
36 20	$1737	1826	2105	1742	1869	1813
42 20	$1884	2006	2289	1890	2157	2032
60 20	$3125	3186	3491	2953	3256	3345
72 20	$3484	3540	3852	3370	3616	3704

	2BFL03L	2BFL04L	2BFL06L	2BFL07L	2BFWNTL	2BFW04L
FM72A. 30 20	$1755	2032	1669	1914	2040	2408
36 20	$1971	2215	1852	2096	2376	2744
42 20	$2113	2400	2035	2400	2760	3127
60 20	$3468	3711	3231	3476	4293	4659
72 20	$3828	4072	3591	3835	4761	5127

	2BFW07L	4BFPNTL	4BFP03L	4BFP04L	4BFP06L	4BFP07L
FM72A. 30 20	$2289	1616	1736	2038	1619	1919
36 20	$2626	1796	1914	2197	1833	2079
42 20	$3009	1976	2097	2380	2018	2262
60 20	$4422	3276	3336	3646	3103	3409
72 20	$4891	3636	3690	4005	3523	3768

	4BFLNTL	4BFL03L	4BFL04L	4BFL06L	4BFL07L	4BFWNTL
FM72A. 30 20	$1724	1844	2123	1760	2005	2093
36 20	$1940	2022	2306	1943	2189	2423
42 20	$2083	2204	2490	2127	2373	2799
60 20	$3497	3552	3864	3383	3628	4519
72 20	$3858	3979	4224	3743	3987	4913

	4BFW04L	4BFW07L	5BFPNTL	5BFP03L	5BFP04L	5BFP06L
FM72A. 30 20	$2497	2380	1588	1709	1979	1591
36 20	$2834	2717	1771	1891	2138	1774
42 20	$3219	3100	1955	2078	2322	1959
60 20	$4812	4576	3218	3340	3587	3103
72 20	$5278	5043	3577	3701	3945	3465

	5BFP07L	5BFLNTL	5BFL03L	5BFL04L	5BFL06L	5BFL07L
FM72A. 30 20	$1861	1698	1819	2064	1701	1945
36 20	$2019	1881	2003	2247	1884	2128
42 20	$2203	2064	2147	2432	2068	2313
60 20	$3350	3438	3494	3805	3325	3569
72 20	$3708	3799	3919	4165	3684	3929

	5BFWNTL	5BFW04L	5BFW07L
FM72A. 30 20	$2073	2439	2322
36 20	$2410	2775	2657
42 20	$2795	3159	3042

Metal Low Credenza, with Drawers *continued*

60 20				$4460	4754	4517
72 20				$4854	5220	4984

	2BFPNTL	2BFP03L	2BFP04L	2BFP06L	2BFP07L	2BFLNTL
FM72K.30 20	$1525	1645	1884	1528	1768	1634
36 20	$1705	1826	2066	1709	1834	1813
42 20	$1884	2006	2247	1890	2117	1994
60 20	$3067	3186	3426	2953	3195	3283
72 20	$3419	3540	3780	3307	3548	3635

	2BFL03L	2BFL04L	2BFL06L	2BFL07L	2BFWNTL	2BFW04L
FM72K.30 20	$1755	1994	1638	1878	2002	2363
36 20	$1934	2173	1817	2057	2331	2692
42 20	$2113	2355	1997	2355	2709	3069
60 20	$3403	3642	3171	3411	4213	4572
72 20	$3756	3996	3524	3763	4672	5031

	2BFW07L	4BFPNTL	4BFP03L	4BFP04L	4BFP06L	4BFP07L
FM72K.30 20	$2247	1616	1736	2000	1619	1883
36 20	$2577	1796	1914	2156	1799	2040
42 20	$2952	1976	2097	2335	1980	2220
60 20	$4340	3215	3336	3578	3103	3345
72 20	$4800	3567	3690	3930	3457	3697

	4BFLNTL	4BFL03L	4BFL04L	4BFL06L	4BFL07L	4BFWNTL
FM72K.30 20	$1724	1844	2083	1727	1967	2093
36 20	$1904	2022	2263	1907	2148	2423
42 20	$2083	2204	2443	2087	2328	2799
60 20	$3432	3552	3792	3320	3560	4434
72 20	$3786	3904	4145	3672	3912	4821

	4BFW04L	4BFW07L	5BFPNTL	5BFP03L	5BFP04L	5BFP06L
FM72K.30 20	$2451	2335	1558	1677	1942	1561
36 20	$2781	2666	1738	1856	2098	1741
42 20	$3158	3042	1918	2039	2278	1922
60 20	$4722	4491	3157	3278	3519	3045
72 20	$5179	4949	3510	3632	3871	3400

	5BFP07L	5BFLNTL	5BFL03L	5BFL04L	5BFL06L	5BFL07L
FM72K.30 20	$1826	1666	1784	2025	1669	1909
36 20	$1981	1846	1965	2205	1849	2088
42 20	$2162	2025	2147	2386	2029	2270
60 20	$3287	3374	3494	3734	3262	3502
72 20	$3639	3728	3846	4087	3615	3855

	5BFWNTL	5BFW04L	5BFW07L
FM72K.30 20	$2034	2393	2278
36 20	$2365	2723	2608
42 20	$2742	3100	2985
60 20	$4376	4665	4432
72 20	$4763	5122	4890

Step 10. Paint/Steel Type

SS	smooth paint on smooth steel	+$0
XS	textured paint on smooth steel	+$0

Step 11. Surface Finish

Metallic Paint

For smooth paint on smooth steel (SS)

CN	metallic champagne	+$0
EH	metallic bronze	+$0
MS	metallic silver	+$0

Sand Texture Paint

For textured paint on smooth steel (XS)

8Q	folkstone grey A	+$0
91	white	+$0
98	studio white A	+$0
BK	black	+$0
CL	cool grey neutral	+$0
G1	graphite	+$0
WL	sandstone A	+$0
WN	warm grey neutral	+$0

Step 12. Front Finish

Solid-Color Laminate

For laminate front (L)

8Q	folkstone grey A	+$0
91	white	+$0
98	studio white	+$0
CL	cool grey neutral A	+$0
LU	soft white A	+$0
WL	sandstone A	+$0
WN	warm grey neutral	+$0

Linen Laminate

For laminate front (L)

LBM	crisp linen	+$0
LBN	classic linen	+$0
LBP	casual linen	+$0

Mesh Laminate

For laminate front (L)

LBK	pewter mesh	+$0
LBL	steel mesh	+$0

Twill Laminate

For laminate front (L)

LBF	neutral twill	+$0
LBG	sarum twill	+$0
LBH	earthen twill	+$0
LBJ	graphite twill	+$0
LBQ	white twill	+$0

Wood-Grain Laminate

For laminate front (L)

HM	natural maple	+$0
HP	light anigre A	+$0
LBA	clear on ash	+$0
LBR	phantom ecru	+$0
LBS	phantom cocoa	+$0
LBU	medium matte walnut	+$0
LBV	warm grey teak	+$0
LBB	oak on ash	+$0
LBC	walnut on ash	+$0
LBD	dark brown walnut	+$0
LBE	medium red walnut	+$0
76	light brown walnut A	+$0
HX	aged cherry	+$0
HY	walnut on cherry A	+$0

Wood Veneer

For veneer front (W)

2U	light brown walnut A	+$0
40	dark brown walnut A	+$0
ED	aged cherry A	+$0
EK	medium red walnut A	+$0
EW	medium matte walnut A	+$0
ET	clear on ash A	+$0
EU	oak on ash A	+$0
EV	walnut on ash A	+$0
UL	natural maple A	+$0
UX	walnut on cherry A	+$0

Step 13. Top Finish

Solid-Color Laminate

For 3/8" laminate top (03) or 1 1/4" laminate top (06)

8Q	folkstone grey A	+$0
91	white	+$0
98	studio white	+$0
CL	cool grey neutral A	+$0
LU	soft white A	+$0
WL	sandstone A	+$0
WN	warm grey neutral	+$0

Linen Laminate

For 3/8" laminate top (03) or 1 1/4" laminate top (06)

LBM	crisp linen	+$0
LBN	classic linen	+$0
LBP	casual linen	+$0

Mesh Laminate

For 3/8" laminate top (03) or 1 1/4" laminate top (06)

LBK	pewter mesh	+$0
LBL	steel mesh	+$0

Twill Laminate

For 3/8" laminate top (03) or 1 1/4" laminate top (06)

LBF	neutral twill	+$0
LBG	sarum twill	+$0
LBH	earthen twill	+$0
LBJ	graphite twill	+$0
LBQ	white twill	+$0

Wood-Grain Laminate

For 3/8" laminate top (03) or 1 1/4" laminate top (06)

HM	natural maple	+$0
HP	light anigre A	+$0
LBA	clear on ash	+$0
LBR	phantom ecru	+$0
LBS	phantom cocoa	+$0
LBU	medium matte walnut	+$0
LBV	warm grey teak	+$0
LBB	oak on ash	+$0
LBC	walnut on ash	+$0
LBD	dark brown walnut	+$0
LBE	medium red walnut	+$0
76	light brown walnut A	+$0
HX	aged cherry	+$0
HY	walnut on cherry A	+$0

Metal Low Credenza, with Drawers *continued*

Wood Veneer

For 3/8" veneer top (04) or 1 1/4" veneer top (07)

2U	light brown walnut A	+$0
40	dark brown walnut A	+$0
ED	aged cherry A	+$0
EK	medium red walnut A	+$0
EW	medium matte walnut A	+$0
ET	clear on ash A	+$0
EU	oak on ash A	+$0
EV	walnut on ash A	+$0
UL	natural maple A	+$0
UX	walnut on cherry A	+$0

Step 14. Base Finish

For 4"-high foot (4) or 4" -high foot sleeveless (5)

Sand Texture Paint

8Q	folkstone grey A	+$0
91	white A	+$0
98	studio white A	+$0
BK	black A	+$0
CL	cool grey neutral A	+$0
G1	graphite A	+$0
WL	sandstone A	+$0
WN	warm grey neutral A	+$0

Metallic Paint

CN	metallic champagne	+$0
EH	metallic bronze	+$0
MS	metallic silver	+$0

Step 15. Pull Finish

For arc pull (A.)

NH	brushed nickel	+$0
NK	black nickel A	+$0

Metallic Paint

For bar pull (K.)

CN	metallic champagne	+$0
MS	metallic silver	+$0

Sand Texture Paint

For bar pull (K.)

BK	black	+$0
79	green apple	+$15
MY3	yellow oxide	+$15
RO	red	+$15
TRQ	turquoise	+$15

Smooth Paint

For bar pull (K.)

8Q	folkstone grey	+$0
91	white	+$0
98	studio white	+$0
G1	graphite	+$0
WL	sandstone	+$0

Step 16. Counterweight

NO	no counterweight	+$0
CB	counterweight	+$115

Step 17. Lock Option

KA	keyed alike	-$10
KC	keyed differently, chrome	+$0
KD	keyed differently, black	+$0

Metal Low Credenza, Open with Drawers

FM73A.
FM73K.

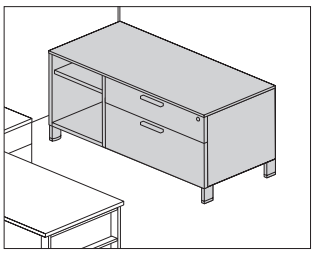

Product Information

Description

This credenza provides drawer storage on 1 side with open storage on the other side. It can be used freestanding or attached to a Canvas wall-based frame to support a frame run. The credenza can also be used to support 1 end of a surface. It has a 3/8"-high or 1 1/4"-high laminate or veneer top and a painted steel case. It is available with 4"-high architectural feet, 4"-high sleeveless architectural feet or a 2 1/4"-high base with 1" leveling glides. The credenza has a positive interlock system that permits only 1 drawer to open at a time. Drawers have full-extension ball-bearing slides. The file drawer accommodates front-to-back filing of letter-, legal, and A4-size hanging files.

Actual credenza widths are 47 7/8", 59 7/8" or 71 7/8"; actual depth is 19 7/8".

Notes

For additional product options, see Vary Easy Program® in Appendices.

Arc pull option (A.) conforms to guidelines of Americans with Disabilities Act (ADA).

File drawers are standard with side-to-side hardware. Order front-to-back rail (FM920.) separately.

Counterweight option (CB) must be specified when a file is not ganged or anchored.

Grain direction is vertical on veneer and wood-grain laminate fronts.

Open side of credenza includes 1 adjustable shelf that adjusts in 1 1/4" increments.

Order optional metal credenza shelf (FM892.) separately.

Credenza with 4"-high foot option (4) and 3/8" thin top can be used to support a Canvas wall-based frame. Order support bracket, low credenza-to-frame (FT292.) separately.

When using credenza to support 1 end of a surface, order 1 of the following products separately:

- Surface support, low credenza, adjustable height (FT299.)
- Surface support, low credenza, fixed height (FT298.)

To cover adjacent credenzas with a single top, specify credenzas with no top option (NT) and order credenza top (FM890.) separately.

1 1/4" top (06 and 07) is not removable and cannot be used to support a Canvas wall-based frame. The 1 1/4" top will add 5/8" to overall height of unit.

Please note that on the 4" sleeveless architectural foot (5) glides will be more visible.

To provide temporary guest seating on a credenza, order cushion top (FF891.) separately.

For keyed-alike locks, see Keyed-Alike Information in Appendices.

Dimensions

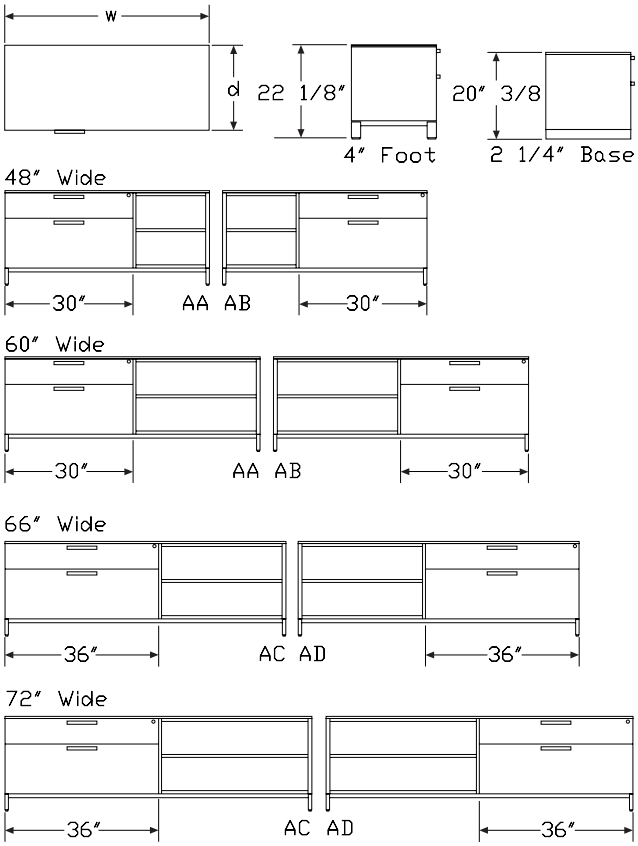

Metal Low Credenza, Open with Drawers *continued*

Specification Information

Step 1.

FM73

Step 2. Pull Type

A. arc pull
K. bar pull

Step 3. Width

48 48" wide
60 60" wide
66 66" wide
72 72" wide

Step 4. Depth

20 20" deep

Step 5. Base/Foot Height

2 2¼"-high base
4 4"-high foot
5 4" -high foot sleeveless A

Step 6. Configuration

For 48" wide (48)

AA 30" box/file left, open right
AB open left, 30" box/file right

For 60" wide (60)

AA 30" box/file left, open right
AB open left, 30" box/file right
AC 36" box/file left, open right
AD open left, 36" box/file right

For 66" wide (66) or 72" wide (72)

AC 36" box/file left, open right
AD open left, 36" box/file right
AE 42" box/file left, open right A
AF open left, 42" box/file right A

Step 7. Front Material

P painted metal front
L laminate front
W veneer front A

Step 8. Top

For painted metal front (P) or laminate front (L)

NT no top
03 ⅜" laminate top
04 ⅜" veneer top A
06 1¼" laminate top
07 1¼" veneer top A

For veneer front (W)

NT no top
04 ⅜" veneer top A
07 1¼" veneer top A

Step 9. Lock

L lock

Prices for Steps 1-9.

			2AAPNTL	2AAP03L	2AAP04L	2AAP06L	2AAP07L	2AALNTL
FM73A.	**48**	**20**	$2475	2598	2842	2362	2605	2647
	60	**20**	$2701	2824	3064	2587	2828	2885

			2AAL03L	2AAL04L	2AAL06L	2AAL07L	2AAWNTL	2AAW04L
FM73A.	**48**	**20**	$2770	3014	2533	2776	3259	3625
	60	**20**	$3009	3193	2771	2956	3592	3959

			2AAW07L	2ABPNTL	2ABP03L	2ABP04L	2ABP06L	2ABP07L
FM73A.	**48**	**20**	$3388	2475	2598	2842	2362	2605
	60	**20**	$3723	2701	2824	3067	2587	2828

			2ABLNTL	2ABL03L	2ABL04L	2ABL06L	2ABL07L	2ABWNTL
FM73A.	**48**	**20**	$2647	2770	3014	2533	2776	3259
	60	**20**	$2885	3009	3193	2771	2956	3592

			2ABW04L	2ABW07L	2ACPNTL	2ACP03L	2ACP04L	2ACP06L
FM73A.	**48**	**20**	$3625	3388	—	—	—	—
	60	**20**	$3959	3723	2774	2896	3141	2658
	66	**20**	—	—	$2808	2931	3173	2694
	72	**20**	—	—	$2852	2975	3217	2739

			2ACP07L	2ACLNTL	2ACL03L	2ACL04L	2ACL06L	2ACL07L
FM73A.	**60**	**20**	$2906	2978	3098	3343	2863	3107
	66	**20**	$2937	2998	3123	3367	2885	3131
	72	**20**	$2981	3047	3169	3414	2933	3176

			2ACWNTL	2ACW04L	2ACW07L	2AEPNTL	2AEP03L	2AEP04L
FM73A.	**60**	**20**	$3691	4059	3823	—	—	—

Metal Low Credenza, Open with Drawers *continued*

66 20	$3817	4184	3947	2914	3036	3279
72 20	$3924	4292	4055	2960	3084	3326

	2AEP06L	2AEP07L	2AELNTL	2AEL03L	2AEL04L	2AEL06L
FM73A. 66 20	$2800	3043	3111	3234	3479	2996
72 20	$2848	3090	3159	3283	3650	3045

	2AEL07L	2AEWNTL	2AEW04L	2AEW07L	2ADPNTL	2ADP03L
FM73A. 60 20	—	—	—	—	$2773	2896
66 20	$3243	3943	4309	4074	2807	2931
72 20	$3414	4053	4419	4184	2852	2975

	2ADP04L	2ADP06L	2ADP07L	2ADLNTL	2ADL03L	2ADL04L
FM73A. 60 20	$3141	2658	2906	2978	3098	3343
66 20	$3173	2694	2937	2998	3125	3367
72 20	$3217	2737	2981	3047	3169	3414

	2ADL06L	2ADL07L	2ADWNTL	2ADW04L	2ADW07L	2AFPNTL
FM73A. 60 20	$2863	3107	3691	4059	3823	—
66 20	$2885	3131	3817	4184	3947	2914
72 20	$2933	3176	3924	4292	4055	2960

	2AFP03L	2AFP04L	2AFP06L	2AFP07L	2AFLNTL	2AFL03L
FM73A. 66 20	$3036	3279	2800	3043	3111	3234
72 20	$3084	3326	2848	3090	3159	3283

	2AFL04L	2AFL06L	2AFL07L	2AFWNTL	2AFW04L	2AFW07L
FM73A. 66 20	$3479	2996	3243	3943	4309	4074
72 20	$3527	3047	3414	4053	4419	4184

	4AAPNTL	4AAP03L	4AAP04L	4AAP06L	4AAP07L	4AALNTL
FM73A. 48 20	$2629	2752	2994	2515	2759	2801
60 20	$2854	2978	3220	2742	2984	3040

	4AAL03L	4AAL04L	4AAL06L	4AAL07L	4AAWNTL	4AAW04L
FM73A. 48 20	$2923	3166	2686	2931	3411	3778
60 20	$3162	3407	2926	3170	3745	4113

	4AAW07L	4ABPNTL	4ABP03L	4ABP04L	4ABP06L	4ABP07L
FM73A. 48 20	$3542	2629	2752	2994	2516	2759
60 20	$3876	2854	2978	3220	2742	2984

	4ABLNTL	4ABL03L	4ABL04L	4ABL06L	4ABL07L	4ABWNTL
FM73A. 48 20	$2751	2923	3166	2686	2931	3411
60 20	$3040	3162	3407	2926	3170	3745

	4ABW04L	4ABW07L	4ACPNTL	4ACP03L	4ACP04L	4ACP06L
FM73A. 48 20	$3778	3542	—	—	—	—
60 20	$4113	3876	2926	3051	3295	2813
66 20	—	—	$2957	3083	3325	2846
72 20	—	—	$3002	3128	3370	2890

	4ACP07L	4ACLNTL	4ACL03L	4ACL04L	4ACL06L	4ACL07L
FM73A. 60 20	$3057	3130	3252	3495	3016	3260
66 20	$3089	3153	3273	3517	3037	3280
72 20	$3134	3200	3322	3565	3087	3329

	4ACWNTL	4ACW04L	4ACW07L	4AEPNTL	4AEP03L	4AEP04L
FM73A. 60 20	$3842	4211	3974	—	—	—
66 20	$4003	4368	4133	3062	3189	3430
72 20	$4077	4445	4209	3111	3236	3479

	4AEP06L	4AEP07L	4AELNTL	4AEL03L	4AEL04L	4AEL06L
FM73A. 66 20	$2948	3194	3262	3383	3628	3148
72 20	$2996	3243	3313	3438	3681	3202

	4AEL07L	4AEWNTL	4AEW04L	4AEW07L	4ADPNTL	4ADP03L
FM73A. 60 20	—	—	—	—	$2927	3051
66 20	$3392	4092	4459	4223	2957	3083
72 20	$3444	4254	4573	4336	3002	3128

	4ADP04L	4ADP06L	4ADP07L	4ADLNTL	4ADL03L	4ADL04L
FM73A. 60 20	$3295	2815	3057	3130	3252	3495
66 20	$3325	2846	3089	3153	3273	3517
72 20	$3370	2890	3134	3200	3322	3565

	4ADL06L	4ADL07L	4ADWNTL	4ADW04L	4ADW07L	4AFPNTL
FM73A. 60 20	$3016	3260	3842	4211	3974	—
66 20	$3037	3280	4003	4368	4133	3062
72 20	$3087	3329	4079	4445	4209	3111

	4AFP03L	4AFP04L	4AFP06L	4AFP07L	4AFLNTL	4AFL03L
FM73A. 66 20	$3187	3430	2948	3194	3262	3383
72 20	$3236	3479	2996	3243	3313	3438

	4AFL04L	4AFL06L	4AFL07L	4AFWNTL	4AFW04L	4AFW07L
FM73A. 66 20	$3628	3148	3392	4092	4459	4223
72 20	$3681	3200	3444	4254	4573	4336

	5AAPNTL	5AAP03L	5AAP04L	5AAP06L	5AAP07L	5AALNTL
FM73A. 48 20	$2570	2692	2936	2455	2700	2742
60 20	$2796	2917	3160	2682	2925	2980

Metal Low Credenza, Open with Drawers *continued*

	5AAL03L	5AAL04L	5AAL06L	5AAL07L	5AAWNTL	5AAW04L
FM73A. 48 20	$2863	3107	2627	2871	3352	3720
60 20	$3101	3348	2866	3111	3686	4053

	5AAW07L	5ABPNTL	5ABP03L	5ABP04L	5ABP06L	5ABP07L
FM73A. 48 20	$3483	2570	2692	2936	2455	2700
60 20	$3816	2796	2917	3160	2682	2925

	5ABLNTL	5ABL03L	5ABL04L	5ABL06L	5ABL07L	5ABWNTL
FM73A. 48 20	$2742	2863	3107	2627	2871	3352
60 20	$2980	3101	3348	2866	3111	3686

	5ABW04L	5ABW07L	5ACPNTL	5ACP03L	5ACP04L	5ACP06L
FM73A. 48 20	$3720	3483	—	—	—	—
60 20	$4053	3816	2867	2990	3235	2755
66 20	—	—	$2897	3022	3265	2783
72 20	—	—	$2943	3067	3311	2830

	5ACP07L	5ACLNTL	5ACL03L	5ACL04L	5ACL06L	5ACL07L
FM73A. 60 20	$2997	3071	3193	3437	2956	3201
66 20	$3029	3092	3212	3458	2978	3221
72 20	$3076	3141	3262	3507	3026	3270

	5ACWNTL	5ACW04L	5ACW07L	5AEPNTL	5AEP03L	5AEP04L
FM73A. 60 20	$3783	4153	3915	—	—	—
66 20	$3944	4310	4075	3002	3127	3370
72 20	$4018	4386	4149	3051	3174	3419

	5AEP06L	5AEP07L	5AELNTL	5AEL03L	5AEL04L	5AEL06L
FM73A. 66 20	$2889	3134	3203	3325	3569	3089
72 20	$2938	3183	3255	3377	3621	3141

	5AEL07L	5AEWNTL	5AEW04L	5AEW07L	5ADPNTL	5ADP03L
FM73A. 60 20	—	—	—	—	$2867	2990
66 20	$3332	4033	4400	4164	2897	3022
72 20	$3384	4195	4513	4277	2943	3067

	5ADP04L	5ADP06L	5ADP07L	5ADLNTL	5ADL03L	5ADL04L
FM73A. 60 20	$3235	2755	2997	3071	3193	3437
66 20	$3265	2783	3029	3092	3212	3458
72 20	$3311	2830	3076	3141	3262	3507

	5ADL06L	5ADL07L	5ADWNTL	5ADW04L	5ADW07L	5AFPNTL
FM73A. 60 20	$2956	3201	3783	4153	3915	—
66 20	$2978	3221	3944	4310	4075	3002
72 20	$3026	3270	4018	4386	4149	3051

	5AFP03L	5AFP04L	5AFP06L	5AFP07L	5AFLNTL	5AFL03L
FM73A. 66 20	$3127	3370	2889	3134	3203	3325
72 20	$3174	3419	2938	3183	3255	3377

	5AFL04L	5AFL06L	5AFL07L	5AFWNTL	5AFW04L	5AFW07L
FM73A. 66 20	$3569	3089	3332	4033	4400	4164
72 20	$3621	3141	3384	4195	4513	4277

	2AAPNTL	2AAP03L	2AAP04L	2AAP06L	2AAP07L	2AALNTL
FM73K. 48 20	$2477	2598	2844	2363	2607	2648
60 20	$2702	2824	3065	2588	2829	2886

	2AAL03L	2AAL04L	2AAL06L	2AAL07L	2AAWNTL	2AAW04L
FM73K. 48 20	$2770	3015	2534	2777	3261	3627
60 20	$3009	3194	2772	2957	3594	3961

	2AAW07L	2ABPNTL	2ABP03L	2ABP04L	2ABP06L	2ABP07L
FM73K. 48 20	$3390	2477	2598	2844	2363	2607
60 20	$3725	2702	2824	3068	2588	2829

	2ABLNTL	2ABL03L	2ABL04L	2ABL06L	2ABL07L	2ABWNTL
FM73K. 48 20	$2648	2770	3015	2534	2777	3261
60 20	$2886	3009	3194	2772	2957	3594

	2ABW04L	2ABW07L	2ACPNTL	2ACP03L	2ACP04L	2ACP06L
FM73K. 48 20	$3627	3390	—	—	—	—
60 20	$3961	3725	2774	2896	3142	2660
66 20	—	—	$2808	2931	3175	2695
72 20	—	—	$2853	2975	3218	2739

	2ACP07L	2ACLNTL	2ACL03L	2ACL04L	2ACL06L	2ACL07L
FM73K. 60 20	$2907	2979	3100	3345	2865	3109
66 20	$2938	3000	3125	3369	2886	3133
72 20	$2982	3049	3169	3416	2934	3178

	2ACWNTL	2ACW04L	2ACW07L	2AEPNTL	2AEP03L	2AEP04L
FM73K. 60 20	$3692	4061	3825	—	—	—
66 20	$3819	4186	3949	2916	3037	3281
72 20	$3926	4295	4058	2961	3084	3327

	2AEP06L	2AEP07L	2AELNTL	2AEL03L	2AEL04L	2AEL06L
FM73K. 66 20	$2801	3045	3112	3236	3480	2998
72 20	$2848	3091	3161	3283	3652	3047

	2AEL07L	2AEWNTL	2AEW04L	2AEW07L	2ADPNTL	2ADP03L
FM73K. 60 20	—	—	—	—	$2774	2896
66 20	$3244	3945	4311	4076	2808	2931

Metal Low Credenza, Open with Drawers *continued*

72	20	$3416	4055	4422	4186	2853	2975

		2ADP04L	2ADP06L	2ADP07L	2ADLNTL	2ADL03L	2ADL04L
FM73K.60	20	$3142	2660	2907	2979	3100	3345
66	20	$3175	2695	2938	3000	3125	3369
72	20	$3218	2739	2982	3049	3169	3416

		2ADL06L	2ADL07L	2ADWNTL	2ADW04L	2ADW07L	2AFPNTL
FM73K.60	20	$2865	3109	3692	4061	3825	—
66	20	$2886	3133	3819	4186	3949	2916
72	20	$2934	3178	3926	4295	4058	2961

		2AFP03L	2AFP04L	2AFP06L	2AFP07L	2AFLNTL	2AFL03L
FM73K.66	20	$3037	3281	2801	3045	3112	3236
72	20	$3084	3327	2848	3091	3161	3283

		2AFL04L	2AFL06L	2AFL07L	2AFWNTL	2AFW04L	2AFW07L
FM73K.66	20	$3480	2998	3244	3945	4311	4076
72	20	$3529	3047	3416	4055	4422	4186

		4AAPNTL	4AAP03L	4AAP04L	4AAP06L	4AAP07L	4AALNTL
FM73K.48	20	$2631	2752	2996	2516	2761	2802
60	20	$2855	2978	3221	2742	2985	3040

		4AAL03L	4AAL04L	4AAL06L	4AAL07L	4AAWNTL	4AAW04L
FM73K.48	20	$2923	3167	2688	2932	3413	3780
60	20	$3162	3409	2926	3171	3747	4115

		4AAW07L	4ABPNTL	4ABP03L	4ABP04L	4ABP06L	4ABP07L
FM73K.48	20	$3544	2631	2752	2996	2516	2761
60	20	$3878	2855	2978	3221	2742	2985

		4ABLNTL	4ABL03L	4ABL04L	4ABL06L	4ABL07L	4ABWNTL
FM73K.48	20	$2802	2923	3167	2688	2932	3413
60	20	$3040	3162	3409	2926	3171	3747

		4ABW04L	4ABW07L	4ACPNTL	4ACP03L	4ACP04L	4ACP06L
FM73K.48	20	$3780	3544	—	—	—	—
60	20	$4115	3878	2927	3051	3296	2815
66	20	—	—	$2958	3083	3326	2847
72	20	—	—	$3004	3128	3372	2890

		4ACP07L	4ACLNTL	4ACL03L	4ACL04L	4ACL06L	4ACL07L
FM73K.60	20	$3058	3132	3254	3497	3018	3262
66	20	$3090	3153	3273	3519	3038	3282
72	20	$3136	3202	3323	3567	3087	3331

		4ACWNTL	4ACW04L	4ACW07L	4AEPNTL	4AEP03L	4AEP04L
FM73K.60	20	$3844	4214	3976	—	—	—
66	20	$4006	4371	4136	3063	3189	3431
72	20	$4079	4448	4211	3112	3236	3480

		4AEP06L	4AEP07L	4AELNTL	4AEL03L	4AEL04L	4AEL06L
FM73K.66	20	$2950	3195	3264	3385	3630	3150
72	20	$2998	3244	3315	3438	3683	3202

		4AEL07L	4AEWNTL	4AEW04L	4AEW07L	4ADPNTL	4ADP03L
FM73K.60	20	—	—	—	—	$2927	3051
66	20	$3394	4094	4461	4225	2958	3083
72	20	$3446	4256	4575	4338	3004	3128

		4ADP04L	4ADP06L	4ADP07L	4ADLNTL	4ADL03L	4ADL04L
FM73K.60	20	$3296	2815	3058	3132	3254	3497
66	20	$3326	2847	3090	3153	3273	3519
72	20	$3372	2890	3136	3202	3323	3567

		4ADL06L	4ADL07L	4ADWNTL	4ADW04L	4ADW07L	4AFPNTL
FM73K.60	20	$3018	3262	3844	4214	3976	—
66	20	$3038	3282	4006	4371	4136	3063
72	20	$3087	3331	4079	4448	4211	3112

		4AFP03L	4AFP04L	4AFP06L	4AFP07L	4AFLNTL	4AFL03L
FM73K.66	20	$3189	3431	2950	3195	3264	3385
72	20	$3236	3480	2998	3244	3315	3438

		4AFL04L	4AFL06L	4AFL07L	4AFWNTL	4AFW04L	4AFW07L
FM73K.66	20	$3630	3150	3394	4094	4461	4225
72	20	$3683	3202	3446	4256	4575	4338

		5AAPNTL	5AAP03L	5AAP04L	5AAP06L	5AAP07L	5AALNTL
FM73K.48	20	$2571	2693	2937	2456	2701	2743
60	20	$2797	2919	3162	2684	2926	2981

		5AAL03L	5AAL04L	5AAL06L	5AAL07L	5AAWNTL	5AAW04L
FM73K.48	20	$2865	3109	2629	2873	3353	3722
60	20	$3103	3349	2868	3112	3688	4055

		5AAW07L	5ABPNTL	5ABP03L	5ABP04L	5ABP06L	5ABP07L
FM73K.48	20	$3484	2571	2693	2937	2456	2701
60	20	$3818	2797	2919	3162	2684	2926

		5ABLNTL	5ABL03L	5ABL04L	5ABL06L	5ABL07L	5ABWNTL
FM73K.48	20	$2743	2865	3109	2629	2873	3353
60	20	$2981	3103	3349	2868	3112	3688

Metal Low Credenza, Open with Drawers *continued*

		5ABW04L	5ABW07L	5ACPNTL	5ACP03L	5ACP04L	5ACP06L
FM73K.48	**20**	$3722	3484	—	—	—	—
60	**20**	$4055	3818	2869	2992	3237	2756
66	**20**	—	—	$2899	3024	3267	2785
72	**20**	—	—	$2945	3068	3313	2831

		5ACP07L	5ACLNTL	5ACL03L	5ACL04L	5ACL06L	5ACL07L
FM73K.60	**20**	$2999	3073	3194	3439	2957	3203
66	**20**	$3031	3093	3214	3460	2979	3222
72	**20**	$3078	3142	3264	3508	3028	3271

		5ACWNTL	5ACW04L	5ACW07L	5AEPNTL	5AEP03L	5AEP04L
FM73K.60	**20**	$3785	4155	3917	—	—	—
66	**20**	$3946	4312	4077	3004	3129	3372
72	**20**	$4020	4388	4151	3053	3176	3421

		5AEP06L	5AEP07L	5AELNTL	5AEL03L	5AEL04L	5AEL06L
FM73K.66	**20**	$2891	3136	3205	3326	3571	3090
72	**20**	$2940	3185	3257	3378	3623	3142

		5AEL07L	5AEWNTL	5AEW04L	5AEW07L	5ADPNTL	5ADP03L
FM73K.60	**20**	—	—	—	—	$2869	2992
66	**20**	$3334	4035	4402	4166	2899	3024
72	**20**	$3386	4197	4515	4279	2945	3068

		5ADP04L	5ADP06L	5ADP07L	5ADLNTL	5ADL03L	5ADL04L
FM73K.60	**20**	$3237	2756	2999	3073	3194	3439
66	**20**	$3267	2785	3031	3093	3214	3460
72	**20**	$3313	2831	3078	3142	3264	3508

		5ADL06L	5ADL07L	5ADWNTL	5ADW04L	5ADW07L	5AFPNTL
FM73K.60	**20**	$2957	3203	3785	4155	3917	—
66	**20**	$2979	3222	3946	4312	4077	3004
72	**20**	$3028	3271	4020	4388	4151	3053

		5AFP03L	5AFP04L	5AFP06L	5AFP07L	5AFLNTL	5AFL03L
FM73K.66	**20**	$3129	3372	2891	3136	3205	3326
72	**20**	$3176	3421	2940	3185	3257	3378

		5AFL04L	5AFL06L	5AFL07L	5AFWNTL	5AFW04L	5AFW07L
FM73K.66	**20**	$3571	3090	3334	4035	4402	4166
72	**20**	$3623	3142	3386	4197	4515	4279

Step 10. Paint/Steel Type		
SS	smooth paint on smooth steel	+$0
XS	textured paint on smooth steel	+$0

Step 11. Surface Finish		
Metallic Paint		
For smooth paint on smooth steel (SS)		
CN	metallic champagne	+$0
EH	metallic bronze	+$0
MS	metallic silver	+$0
Sand Texture Paint		
For textured paint on smooth steel (XS)		
8Q	folkstone grey A	+$0
91	white	+$0
98	studio white A	+$0
BK	black	+$0
CL	cool grey neutral	+$0
G1	graphite	+$0
WL	sandstone A	+$0
WN	warm grey neutral	+$0

Step 12. Front Finish		
Solid-Color Laminate		
For laminate front (L)		
8Q	folkstone grey A	+$0
91	white	+$0
98	studio white	+$0
CL	cool grey neutral A	+$0
LU	soft white A	+$0
WL	sandstone A	+$0
WN	warm grey neutral	+$0
Linen Laminate		
For laminate front (L)		
LBM	crisp linen	+$0
LBN	classic linen	+$0
LBP	casual linen	+$0
Mesh Laminate		
For laminate front (L)		
LBK	pewter mesh	+$0
LBL	steel mesh	+$0

Twill Laminate

For laminate front (L)

LBF	neutral twill	+$0
LBG	sarum twill	+$0
LBH	earthen twill	+$0
LBJ	graphite twill	+$0
LBQ	white twill	+$0

Wood-Grain Laminate

For laminate front (L)

HM	natural maple	+$0
HP	light anigre A	+$0
LBA	clear on ash	+$0
LBR	phantom ecru	+$0
LBS	phantom cocoa	+$0
LBU	medium matte walnut	+$0
LBV	warm grey teak	+$0
LBB	oak on ash	+$0
LBC	walnut on ash	+$0
LBD	dark brown walnut	+$0
LBE	medium red walnut	+$0
76	light brown walnut A	+$0
HX	aged cherry	+$0
HY	walnut on cherry A	+$0

Wood Veneer

For veneer front (W)

2U	light brown walnut A	+$0
40	dark brown walnut A	+$0
ED	aged cherry A	+$0
EK	medium red walnut A	+$0
EW	medium matte walnut A	+$0
ET	clear on ash A	+$0
EU	oak on ash A	+$0
EV	walnut on ash A	+$0
UL	natural maple A	+$0
UX	walnut on cherry A	+$0

Step 13. Top Finish

Solid-Color Laminate

For 3/8" laminate top (03) or 1 1/4" laminate top (06)

8Q	folkstone grey A	+$0
91	white	+$0
98	studio white	+$0
CL	cool grey neutral A	+$0
LU	soft white A	+$0
WL	sandstone A	+$0
WN	warm grey neutral	+$0

Linen Laminate

For 3/8" laminate top (03) or 1 1/4" laminate top (06)

LBM	crisp linen	+$0
LBN	classic linen	+$0
LBP	casual linen	+$0

Mesh Laminate

For 3/8" laminate top (03) or 1 1/4" laminate top (06)

LBK	pewter mesh	+$0
LBL	steel mesh	+$0

Twill Laminate

For 3/8" laminate top (03) or 1 1/4" laminate top (06)

LBF	neutral twill	+$0
LBG	sarum twill	+$0
LBH	earthen twill	+$0
LBJ	graphite twill	+$0
LBQ	white twill	+$0

Wood-Grain Laminate

For 3/8" laminate top (03) or 1 1/4" laminate top (06)

HM	natural maple	+$0
HP	light anigre A	+$0
LBA	clear on ash	+$0
LBR	phantom ecru	+$0
LBS	phantom cocoa	+$0
LBU	medium matte walnut	+$0
LBV	warm grey teak	+$0
LBB	oak on ash	+$0
LBC	walnut on ash	+$0
LBD	dark brown walnut	+$0
LBE	medium red walnut	+$0
76	light brown walnut A	+$0
HX	aged cherry	+$0
HY	walnut on cherry A	+$0

Wood Veneer

For 3/8" veneer top (04) or 1 1/4" veneer top (07)

2U	light brown walnut A	+$0
40	dark brown walnut A	+$0
ED	aged cherry A	+$0
EK	medium red walnut A	+$0
EW	medium matte walnut A	+$0
ET	clear on ash A	+$0
EU	oak on ash A	+$0
EV	walnut on ash A	+$0
UL	natural maple A	+$0
UX	walnut on cherry A	+$0

Step 14. Base Finish

For 4"-high foot (4) or 4" -high foot sleeveless (5)

Sand Texture Paint

8Q	folkstone grey A	+$0
91	white A	+$0
98	studio white A	+$0
BK	black A	+$0
CL	cool grey neutral A	+$0
G1	graphite A	+$0
WL	sandstone A	+$0
WN	warm grey neutral A	+$0

Metallic Paint

CN	metallic champagne	+$0
EH	metallic bronze	+$0
MS	metallic silver	+$0

Step 15. Pull Finish

For arc pull (A.)

NH	brushed nickel	+$0
NK	black nickel A	+$0

Metallic Paint

For bar pull (K.)

CN	metallic champagne	+$0
MS	metallic silver	+$0

Sand Texture Paint

For bar pull (K.)

BK	black	+$0
79	green apple	+$15
MY3	yellow oxide	+$15
RO	red	+$15
TRQ	turquoise	+$15

Smooth Paint

For bar pull (K.)

8Q	folkstone grey	+$0
91	white	+$0
98	studio white	+$0
G1	graphite	+$0
WL	sandstone	+$0

Step 16. Counterweight

NO	no counterweight	+$0
CB	counterweight	+$115

Step 17. Lock Option

KA	keyed alike	-$10
KC	keyed differently, chrome	+$0
KD	keyed differently, black	+$0

Metal Low Credenza, Doors with Drawers

FM74A.
FM74K.

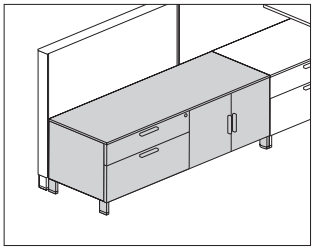

Product Information

Description

This credenza provides enclosed filing and storage and can be used freestanding or attached to a Canvas wall-based frame to support a frame run. It has a 3/8"-high or 1 1/4"-high laminate or veneer top and a painted steel case. It is available with 4"-high architectural feet, 4"-high sleeveless architectural feet or a 2 1/4"-high base with 1" leveling glides. The credenza has a positive interlock system that permits only 1 drawer to open at a time. Drawers have full-extension ball-bearing slides. The file drawer accommodates front-to-back of letter-, legal, and A4-size hanging files.

Actual credenza widths are 47 7/8", 59 7/8" or 71 7/8"; actual depth is 19 7/8".

Notes

For additional product options, see Vary Easy Program in Appendices.

Arc pull option (A.) conforms to guidelines of Americans with Disabilities Act (ADA).

File drawers are standard with side-to-side hardware. Order front-to-back rail (FM920.) separately.

Counterweight option (CB) must be specified when a file is not ganged or anchored.

Grain direction is vertical on veneer and wood-grain laminate fronts.

Storage compartment with door(s) includes 1 adjustable shelf that adjusts in 1 1/4" increments.

Order optional metal credenza shelf (FM892.) separately.

Credenza with 4"-high foot option (4) and 3/8" thin top can be used to support a Canvas wall-based frame. Order support bracket, low credenza-to-frame (FT292.) separately.

When using credenza to support 1 end of a surface, order 1 of the following products separately:

- Surface support, low credenza, adjustable height (FT299.)
- Surface support, low credenza, fixed height (FT298.)

To cover adjacent credenzas with a single top, specify credenzas with no top option (NT) and order credenza top (FM890.) separately.

1 1/4" top (06 and 07) is not removable and cannot be used to support a Canvas wall-based frame. The 1 1/4" top will add 5/8" to overall height of unit.

Please note that on the 4" sleeveless architectural foot (5) glides will be more visible.

To provide temporary guest seating on a credenza, order cushion top (FF891.) separately.

For keyed-alike locks, see Keyed-Alike Information in Appendices.

Dimensions

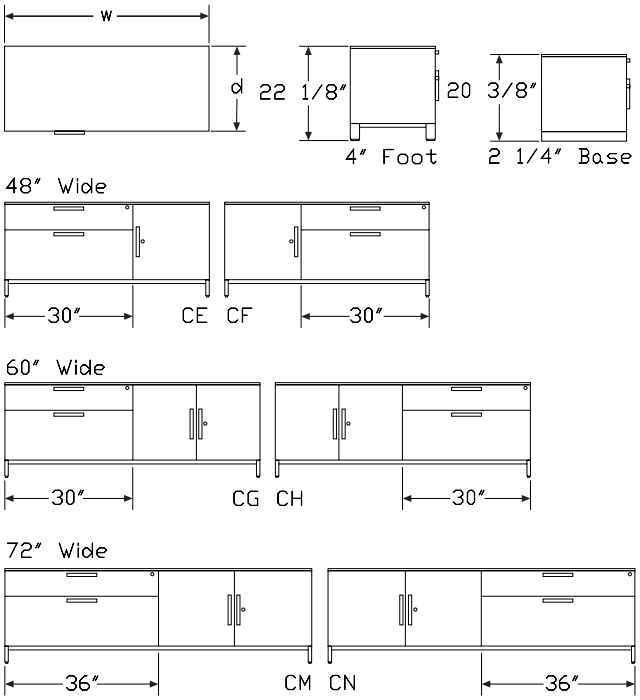

Metal Low Credenza, Doors with Drawers *continued*

Specification Information

Step 1.

FM74 A

Step 2. Pull Type

A. arc pull A
K. bar pull A

Step 3. Width

48 48" wide A
60 60" wide A
72 72" wide A

Step 4. Depth

20 20" deep A

Step 5. Base/Foot Height

2 2¼"-high base A
4 4"-high foot A
5 4" -high foot sleeveless A

Step 6. Configuration

For 48" wide (48)

CE 30" box/file left, single door right A
CF single door left, 30" box/file right A

For 60" wide (60)

CG 30" box/file left, double doors right A
CH double doors left, 30" box/file right A
CM 36" box/file left, double doors right A
CN double doors left, 36" box/file right A

For 72" wide (72)

CM 36" box/file left, double doors right A
CN double doors left, 36" box/file right A
CS 42" box/file left, double doors right A
CT double doors left, 42" box/file right A

Step 7. Front Material

P painted metal front A
L laminate front A
W veneer front A

Step 8. Top

For painted metal front (P) or laminate front (L)

NT no top A
03 ⅜" laminate top A
04 ⅜" veneer top A
06 1¼" laminate top A
07 1¼" veneer top A

For veneer front (W)

NT no top A
04 ⅜" veneer top A
07 1¼" veneer top A

Step 9. Lock

L lock A

Prices for Steps 1-9.

	2CEPNTL	2CEP03L	2CEP04L	2CEP06L	2CEP07L	2CELNTL
FM74A. 48 20	$2513	2638	2880	2401	2645	2689

	2CEL03L	2CEL04L	2CEL06L	2CEL07L	2CEWNTL	2CEW04L
FM74A. 48 20	$2811	3054	2576	2818	3467	3833

	2CEW07L	2CGPNTL	2CGP03L	2CGP04L	2CGP06L	2CGP07L
FM74A. 48 20	$3596	—	—	—	—	—
60 20	—	$3001	3125	3369	2887	3133

	2CGLNTL	2CGL03L	2CGL04L	2CGL06L	2CGL07L	2CGWNTL
FM74A. 60 20	$3206	3329	3574	3093	3337	4270

	2CGW04L	2CGW07L	2CFPNTL	2CFP03L	2CFP04L	2CFP06L
FM74A. 48 20	—	—	$2513	2638	2880	2401
60 20	$4634	4398	—	—	—	—

	2CFP07L	2CFLNTL	2CFL03L	2CFL04L	2CFL06L	2CFL07L
FM74A. 48 20	$2645	2689	2811	3054	2576	2818

	2CFWNTL	2CFW04L	2CFW07L	2CHPNTL	2CHP03L	2CHP04L
FM74A. 48 20	$3467	3833	3596	—	—	—
60 20	—	—	—	$3001	3125	3369

	2CHP06L	2CHP07L	2CHLNTL	2CHL03L	2CHL04L	2CHL06L
FM74A. 60 20	$2887	3133	3206	3329	3574	3093

	2CHL07L	2CHWNTL	2CHW04L	2CHW07L	2CMPNTL	2CMP03L
FM74A. 60 20	$3337	4270	4634	4398	3263	3384

Metal Low Credenza, Doors with Drawers *continued*

72 20	—	—	—	—	$3263	3384

	2CMP04L	2CMP06L	2CMP07L	2CMLNTL	2CML03L	2CML04L
FM74A. 60 20	$3629	3149	3393	3307	3430	3674
72 20	$3629	3149	3384	3484	3607	3852

	2CML06L	2CML07L	2CMWNTL	2CMW04L	2CMW07L	2CSPNTL
FM74A. 60 20	$3194	3438	4409	4774	4539	—
72 20	$3370	3616	4638	5007	4770	3399

	2CSP03L	2CSP04L	2CSP06L	2CSP07L	2CSLNTL	2CSL03L
FM74A. 72 20	$3521	3765	3285	3529	3629	3752

	2CSL04L	2CSL06L	2CSL07L	2CSWNTL	2CSW04L	2CSW07L
FM74A. 72 20	$3997	3458	3761	4838	5205	4969

	2CNPNTL	2CNP03L	2CNP04L	2CNP06L	2CNP07L	2CNLNTL
FM74A. 60 20	$3263	3384	3629	3149	3393	3307
72 20	$3263	3384	3629	3149	3384	3484

	2CNL03L	2CNL04L	2CNL06L	2CNL07L	2CNWNTL	2CNW04L
FM74A. 60 20	$3430	3674	3194	3438	4409	4774
72 20	$3607	3852	3370	3616	4638	5007

	2CNW07L	2CTPNTL	2CTP03L	2CTP04L	2CTP06L	2CTP07L
FM74A. 60 20	$4539	—	—	—	—	—
72 20	$4770	3399	3523	3765	3285	3529

	2CTLNTL	2CTL03L	2CTL04L	2CTL06L	2CTL07L	2CTWNTL
FM74A. 72 20	$3629	3752	3997	3457	3761	4838

	2CTW04L	2CTW07L	4CEPNTL	4CEP03L	4CEP04L	4CEP06L
FM74A. 48 20	—	—	$2683	2806	3049	2570
72 20	$5205	4969	—	—	—	—

	4CEP07L	4CELNTL	4CEL03L	4CEL04L	4CEL06L	4CEL07L
FM74A. 48 20	$2813	2858	2980	3225	2744	2988

	4CEWNTL	4CEW04L	4CEW07L	4CGPNTL	4CGP03L	4CGP04L
FM74A. 48 20	$3619	3985	3748	—	—	—
60 20	—	—	—	$3155	3276	3522

	4CGP06L	4CGP07L	4CGLNTL	4CGL03L	4CGL04L	4CGL06L
FM74A. 60 20	$3042	3286	3361	3482	3727	3246

	4CGL07L	4CGWNTL	4CGW04L	4CGW07L	4CFPNTL	4CFP03L
FM74A. 48 20	—	—	—	—	$2683	2806

60 20	$3490	4420	4787	4551	—	—

	4CFP04L	4CFP06L	4CFP07L	4CFLNTL	4CFL03L	4CFL04L
FM74A. 48 20	$3049	2570	2813	2858	2980	3225

	4CFL06L	4CFL07L	4CFWNTL	4CFW04L	4CFW07L	4CHPNTL
FM74A. 48 20	$2744	2988	3619	3985	3748	—
60 20	—	—	—	—	—	$3155

	4CHP03L	4CHP04L	4CHP06L	4CHP07L	4CHLNTL	4CHL03L
FM74A. 60 20	$3276	3522	3042	3286	3361	3482

	4CHL04L	4CHL06L	4CHL07L	4CHWNTL	4CHW04L	4CHW07L
FM74A. 60 20	$3727	3246	3490	4420	4787	4551

	4CMPNTL	4CMP03L	4CMP04L	4CMP06L	4CMP07L	4CMLNTL
FM74A. 60 20	$3256	3377	3500	3141	3263	3466
72 20	$3416	3541	3782	3303	3546	3636

	4CML03L	4CML04L	4CML06L	4CML07L	4CMWNTL	4CMW04L
FM74A. 60 20	$3588	3832	3351	3595	4561	4928
72 20	$3760	4005	3523	3768	4793	5158

	4CMW07L	4CSPNTL	4CSP03L	4CSP04L	4CSP06L	4CSP07L
FM74A. 60 20	$4691	—	—	—	—	—
72 20	$4922	3558	3681	3924	3444	3689

	4CSLNTL	4CSL03L	4CSL04L	4CSL06L	4CSL07L	4CSWNTL
FM74A. 72 20	$3775	3897	4143	3661	3907	4990

	4CSW04L	4CSW07L	4CNPNTL	4CNP03L	4CNP04L	4CNP06L
FM74A. 60 20	—	—	$3256	3377	3500	3141
72 20	$5360	5122	3416	3539	3782	3303

	4CNP07L	4CNLNTL	4CNL03L	4CNL04L	4CNL06L	4CNL07L
FM74A. 60 20	$3263	3466	3588	3832	3351	3595
72 20	$3546	3636	3760	4005	3523	3768

	4CNWNTL	4CNW04L	4CNW07L	4CTPNTL	4CTP03L	4CTP04L
FM74A. 60 20	$4561	4928	4691	—	—	—
72 20	$4793	5158	4922	3558	3681	3924

	4CTP06L	4CTP07L	4CTLNTL	4CTL03L	4CTL04L	4CTL06L
FM74A. 72 20	$3444	3689	3775	3897	4143	3661

	4CTL07L	4CTWNTL	4CTW04L	4CTW07L	5CEPNTL	5CEP03L
FM74A. 48 20	—	—	—	—	$2624	2746

Metal Low Credenza, Doors with Drawers *continued*

72 20	$3907	4990	5360	5122	—	—

	5CEP04L	5CEP06L	5CEP07L	5CELNTL	5CEL03L	5CEL04L
FM74A. 48 20	$2990	2510	2755	2799	2920	3165

	5CEL06L	5CEL07L	5CEWNTL	5CEW04L	5CEW07L	5CGPNTL
FM74A. 48 20	$2685	2930	3560	3926	3690	—
60 20	—	—	—	—	—	$3302

	5CGP03L	5CGP04L	5CGP06L	5CGP07L	5CGLNTL	5CGL03L
FM74A. 60 20	$3422	3668	3187	3432	3096	3218

	5CGL04L	5CGL06L	5CGL07L	5CGWNTL	5CGW04L	5CGW07L
FM74A. 60 20	$3464	2982	3227	4362	4728	4492

	5CFPNTL	5CFP03L	5CFP04L	5CFP06L	5CFP07L	5CFLNTL
FM74A. 48 20	$2624	2746	2990	2510	2755	2799

	5CFL03L	5CFL04L	5CFL06L	5CFL07L	5CFWNTL	5CFW04L
FM74A. 48 20	$2920	3165	2685	2930	3560	3926

	5CFW07L	5CHPNTL	5CHP03L	5CHP04L	5CHP06L	5CHP07L
FM74A. 48 20	$3690	—	—	—	—	—
60 20	—	$3302	3422	3668	3187	3432

	5CHLNTL	5CHL03L	5CHL04L	5CHL06L	5CHL07L	5CHWNTL
FM74A. 60 20	$3096	3218	3464	2982	3227	4362

	5CHW04L	5CHW07L	5CMPNTL	5CMP03L	5CMP04L	5CMP06L
FM74A. 60 20	$4728	4492	3407	3528	3773	3292
72 20	—	—	$3577	3701	3945	3465

	5CMP07L	5CMLNTL	5CML03L	5CML04L	5CML06L	5CML07L
FM74A. 60 20	$3537	3197	3317	3440	3083	3204
72 20	$3708	3358	3480	3724	3244	3487

	5CMWNTL	5CMW04L	5CMW07L	5CSPNTL	5CSP03L	5CSP04L
FM74A. 60 20	$4502	4868	4631	—	—	—
72 20	$4733	5099	4864	3717	3838	4084

	5CSP06L	5CSP07L	5CSLNTL	5CSL03L	5CSL04L	5CSL06L
FM74A. 72 20	$3601	3848	3499	3621	3865	3384

	5CSL07L	5CSWNTL	5CSW04L	5CSW07L	5CNPNTL	5CNP03L
FM74A. 60 20	—	—	—	—	$3407	3528
72 20	$3629	4932	5301	5063	3577	3701

	5CNP04L	5CNP06L	5CNP07L	5CNLNTL	5CNL03L	5CNL04L
FM74A. 60 20	$3773	3292	3537	3197	3317	3440
72 20	$3945	3465	3708	3358	3480	3724

	5CNL06L	5CNL07L	5CNWNTL	5CNW04L	5CNW07L	5CTPNTL
FM74A. 60 20	$3083	3204	4502	4868	4631	—
72 20	$3244	3487	4733	5099	4864	3717

	5CTP03L	5CTP04L	5CTP06L	5CTP07L	5CTLNTL	5CTL03L
FM74A. 72 20	$3838	4084	3601	3848	3499	3621

	5CTL04L	5CTL06L	5CTL07L	5CTWNTL	5CTW04L	5CTW07L
FM74A. 72 20	$3865	3384	3629	4932	5301	5063

	2CEPNTL	2CEP03L	2CEP04L	2CEP06L	2CEP07L	2CELNTL
FM74K. 48 20	$2525	2650	2894	2413	2658	2702

	2CEL03L	2CEL04L	2CEL06L	2CEL07L	2CEWNTL	2CEW04L
FM74K. 48 20	$2825	3070	2589	2833	3484	3852

	2CEW07L	2CGPNTL	2CGP03L	2CGP04L	2CGP06L	2CGP07L
FM74K. 48 20	$3614	—	—	—	—	—
60 20	—	$3016	3127	3386	2889	3149

	2CGLNTL	2CGL03L	2CGL04L	2CGL06L	2CGL07L	2CGWNTL
FM74K. 60 20	$3222	3427	3592	3108	3354	4291

	2CGW04L	2CGW07L	2CFPNTL	2CFP03L	2CFP04L	2CFP06L
FM74K. 48 20	—	—	$2525	2638	2894	2413
60 20	$4658	4420	—	—	—	—

	2CFP07L	2CFLNTL	2CFL03L	2CFL04L	2CFL06L	2CFL07L
FM74K. 48 20	$2658	2702	2825	3070	2589	2833

	2CFWNTL	2CFW04L	2CFW07L	2CHPNTL	2CHP03L	2CHP04L
FM74K. 48 20	$3484	3852	3614	—	—	—
60 20	—	—	—	$3016	3127	3386

	2CHP06L	2CHP07L	2CHLNTL	2CHL03L	2CHL04L	2CHL06L
FM74K. 60 20	$2901	3149	3222	3345	3592	3108

	2CHL07L	2CHWNTL	2CHW04L	2CHW07L	2CMPNTL	2CMP03L
FM74K. 60 20	$3354	4291	4658	4420	3280	3386
72 20	—	—	—	—	$3280	3386

	2CMP04L	2CMP06L	2CMP07L	2CMLNTL	2CML03L	2CML04L
FM74K. 60 20	$3647	3165	3410	3324	3447	3692

Metal Low Credenza, Doors with Drawers *continued*

72 20	$3647	3151	3401	3501	3609	3871

	2CML06L	2CML07L	2CMWNTL	2CMW04L	2CMW07L	2CSPNTL
FM74K.60 20	$3210	3455	4431	4798	4561	—
72 20	$3387	3634	4661	5032	4793	3415

	2CSP03L	2CSP04L	2CSP06L	2CSP07L	2CSLNTL	2CSL03L
FM74K.72 20	$3523	3784	3302	3547	3647	3771

	2CSL04L	2CSL06L	2CSL07L	2CSWNTL	2CSW04L	2CSW07L
FM74K.72 20	$4017	3474	3780	4862	5231	4994

	2CNPNTL	2CNP03L	2CNP04L	2CNP06L	2CNP07L	2CNLNTL
FM74K.60 20	$3280	3401	3647	3165	3410	3324
72 20	$3280	3386	3647	3151	3401	3501

	2CNL03L	2CNL04L	2CNL06L	2CNL07L	2CNWNTL	2CNW04L
FM74K.60 20	$3447	3692	3210	3455	4431	4798
72 20	$3625	3871	3387	3634	4661	5032

	2CNW07L	2CTPNTL	2CTP03L	2CTP04L	2CTP06L	2CTP07L
FM74K.60 20	$4561	—	—	—	—	—
72 20	$4793	3415	3539	3784	3302	3547

	2CTLNTL	2CTL03L	2CTL04L	2CTL06L	2CTL07L	2CTWNTL
FM74K.72 20	$3647	3771	4017	3474	3780	4862

	2CTW04L	2CTW07L	4CEPNTL	4CEP03L	4CEP04L	4CEP06L
FM74K.48 20	—	—	$2762	2887	3064	2644
72 20	$5231	4994	—	—	—	—

	4CEP07L	4CELNTL	4CEL03L	4CEL04L	4CEL06L	4CEL07L
FM74K.48 20	$2827	2872	3067	3241	2824	3003

	4CEWNTL	4CEW04L	4CEW07L	4CGPNTL	4CGP03L	4CGP04L
FM74K.48 20	$3637	4005	3766	—	—	—
60 20	—	—	—	$3171	3278	3540

	4CGP06L	4CGP07L	4CGLNTL	4CGL03L	4CGL04L	4CGL06L
FM74K.60 20	$3056	3303	3378	3483	3746	3262

	4CGL07L	4CGWNTL	4CGW04L	4CGW07L	4CFPNTL	4CFP03L
FM74K.48 20	—	—	—	—	$2697	2887
60 20	$3507	4442	4811	4574	—	—

	4CFP04L	4CFP06L	4CFP07L	4CFLNTL	4CFL03L	4CFL04L
FM74K.48 20	$3064	2582	2827	2872	3067	3241

	4CFL06L	4CFL07L	4CFWNTL	4CFW04L	4CFW07L	4CHPNTL
FM74K.48 20	$2824	3003	3637	4005	3766	—
60 20	—	—	—	—	—	$3171

	4CHP03L	4CHP04L	4CHP06L	4CHP07L	4CHLNTL	4CHL03L
FM74K.60 20	$3278	3540	3056	3303	3378	3483

	4CHL04L	4CHL06L	4CHL07L	4CHWNTL	4CHW04L	4CHW07L
FM74K.60 20	$3746	3262	3507	4442	4811	4574

	4CMPNTL	4CMP03L	4CMP04L	4CMP06L	4CMP07L	4CMLNTL
FM74K.60 20	$3258	3378	3518	3142	3280	3483
72 20	$3433	3541	3801	3319	3548	3654

	4CML03L	4CML04L	4CML06L	4CML07L	4CMWNTL	4CMW04L
FM74K.60 20	$3606	3851	3367	3613	4583	4952
72 20	$3762	4024	3387	3634	4817	5184

	4CMW07L	4CSPNTL	4CSP03L	4CSP04L	4CSP06L	4CSP07L
FM74K.60 20	$4714	—	—	—	—	—
72 20	$4947	3575	3700	3944	3446	3707

	4CSLNTL	4CSL03L	4CSL04L	4CSL06L	4CSL07L	4CSWNTL
FM74K.72 20	$3794	3917	4163	3680	3606	5015

	4CSW04L	4CSW07L	4CNPNTL	4CNP03L	4CNP04L	4CNP06L
FM74K.60 20	—	—	$3258	3378	3518	3156
72 20	$5387	5147	3433	3541	3784	3319

	4CNP07L	4CNLNTL	4CNL03L	4CNL04L	4CNL06L	4CNL07L
FM74K.60 20	$3280	3483	3606	3851	3367	3613
72 20	$3564	3654	3762	4024	3541	3786

	4CNWNTL	4CNW04L	4CNW07L	4CTPNTL	4CTP03L	4CTP04L
FM74K.60 20	$4583	4952	4714	—	—	—
72 20	$4817	5184	4947	3575	3700	3944

	4CTP06L	4CTP07L	4CTLNTL	4CTL03L	4CTL04L	4CTL06L
FM74K.72 20	$3446	3707	3794	3899	4163	3680

	4CTL07L	4CTWNTL	4CTW04L	4CTW07L	5CEPNTL	5CEP03L
FM74K.48 20	—	—	—	—	$2637	2759
72 20	$3926	5015	5387	5147	—	—

	5CEP04L	5CEP06L	5CEP07L	5CELNTL	5CEL03L	5CEL04L
FM74K.48 20	$3005	2522	2769	2813	2935	3180

Metal Low Credenza, Doors with Drawers *continued*

	5CEL06L	5CEL07L	5CEWNTL	5CEW04L	5CEW07L	5CGPNTL
FM74K.48 20	$2699	2944	3577	3945	3708	—
60 20	—	—	—	—	—	$3318

	5CGP03L	5CGP04L	5CGP06L	5CGP07L	5CGLNTL	5CGL03L
FM74K.60 20	$3439	3686	3203	3449	3111	3234

	5CGL04L	5CGL06L	5CGL07L	5CGWNTL	5CGW04L	5CGW07L
FM74K.60 20	$3481	2997	3243	4384	4752	4514

	5CFPNTL	5CFP03L	5CFP04L	5CFP06L	5CFP07L	5CFLNTL
FM74K.48 20	$2637	2759	3005	2522	2769	2813

	5CFL03L	5CFL04L	5CFL06L	5CFL07L	5CFWNTL	5CFW04L
FM74K.48 20	$2935	3180	2699	2944	3577	3945

	5CFW07L	5CHPNTL	5CHP03L	5CHP04L	5CHP06L	5CHP07L
FM74K.48 20	$3708	—	—	—	—	—
60 20	—	$3318	3439	3686	3203	3449

	5CHLNTL	5CHL03L	5CHL04L	5CHL06L	5CHL07L	5CHWNTL
FM74K.60 20	$3111	3234	3481	2997	3243	4384

	5CHW04L	5CHW07L	5CMPNTL	5CMP03L	5CMP04L	5CMP06L
FM74K.60 20	$4752	4514	3424	3546	3792	3309
72 20	—	—	$3375	3497	3742	3260

	5CMP07L	5CMLNTL	5CML03L	5CML04L	5CML06L	5CML07L
FM74K.60 20	$3554	3213	3334	3457	3098	3220
72 20	$3504	3595	3719	3965	3482	3727

	5CMWNTL	5CMW04L	5CMW07L	5CSPNTL	5CSP03L	5CSP04L
FM74K.60 20	$4525	4893	4654	—	—	—
72 20	$4757	5125	4888	3517	3639	3885

	5CSP06L	5CSP07L	5CSLNTL	5CSL03L	5CSL04L	5CSL06L
FM74K.72 20	$3401	3647	3735	3857	4104	3619

	5CSL07L	5CSWNTL	5CSW04L	5CSW07L	5CNPNTL	5CNP03L
FM74K.60 20	—	—	—	—	$3424	3546
72 20	$3867	4956	5327	5088	3375	3497

	5CNP04L	5CNP06L	5CNP07L	5CNLNTL	5CNL03L	5CNL04L
FM74K.60 20	$3792	3309	3554	3213	3334	3457
72 20	$3742	3260	3504	3595	3719	3965

	5CNL06L	5CNL07L	5CNWNTL	5CNW04L	5CNW07L	5CTPNTL
FM74K.60 20	$3098	3220	4525	4893	4654	—
72 20	$3482	3727	4757	5125	4888	3517

	5CTP03L	5CTP04L	5CTP06L	5CTP07L	5CTLNTL	5CTL03L
FM74K.72 20	$3639	3885	3401	3647	3735	3857

	5CTL04L	5CTL06L	5CTL07L	5CTWNTL	5CTW04L	5CTW07L
FM74K.72 20	$4104	3619	3867	4956	5327	5088

Step 10. Paint/Steel Type

SS	smooth paint on smooth steel A	+$0
XS	textured paint on smooth steel A	+$0

Step 11. Surface Finish

Metallic Paint

For smooth paint on smooth steel (SS)

CN	metallic champagne A	+$0
EH	metallic bronze A	+$0
MS	metallic silver A	+$0

Sand Texture Paint

For textured paint on smooth steel (XS)

8Q	folkstone grey A	+$0
91	white A	+$0
98	studio white A	+$0
BK	black A	+$0
CL	cool grey neutral A	+$0
G1	graphite A	+$0
WL	sandstone A	+$0
WN	warm grey neutral A	+$0

Step 12. Front Finish

Solid-Color Laminate

For laminate front (L)

8Q	folkstone grey A	+$0
91	white A	+$0
98	studio white	+$0
CL	cool grey neutral A	+$0
LU	soft white A	+$0
WL	sandstone A	+$0
WN	warm grey neutral A	+$0

Linen Laminate

For laminate front (L)

LBM	crisp linen	+$0
LBN	classic linen	+$0
LBP	casual linen	+$0

Mesh Laminate

For laminate front (L)

LBK	pewter mesh	+$0
LBL	steel mesh	+$0

Twill Laminate

For laminate front (L)

LBF	neutral twill	+$0
LBG	sarum twill	+$0
LBH	earthen twill	+$0
LBJ	graphite twill	+$0
LBQ	white twill	+$0

Wood-Grain Laminate

For laminate front (L)

HM	natural maple A	+$0
HP	light anigre A	+$0
LBA	clear on ash	+$0
LBR	phantom ecru	+$0
LBS	phantom cocoa	+$0
LBU	medium matte walnut	+$0
LBV	warm grey teak	+$0
LBB	oak on ash	+$0
LBC	walnut on ash	+$0
LBD	dark brown walnut	+$0
LBE	medium red walnut	+$0
76	light brown walnut A	+$0
HX	aged cherry A	+$0
HY	walnut on cherry A	+$0

Wood Veneer

For veneer front (W)

2U	light brown walnut A	+$0
40	dark brown walnut A	+$0
ED	aged cherry A	+$0
EK	medium red walnut A	+$0
EW	medium matte walnut A	+$0
ET	clear on ash A	+$0
EU	oak on ash A	+$0
EV	walnut on ash A	+$0
UL	natural maple A	+$0
UX	walnut on cherry A	+$0

Step 13. Top Finish

Solid-Color Laminate

For 3/8" laminate top (03) or 1 1/4" laminate top (06)

8Q	folkstone grey A	+$0
91	white A	+$0
98	studio white	+$0
CL	cool grey neutral A	+$0
LU	soft white A	+$0
WL	sandstone A	+$0
WN	warm grey neutral A	+$0

Linen Laminate

For 3/8" laminate top (03) or 1 1/4" laminate top (06)

LBM	crisp linen	+$0
LBN	classic linen	+$0
LBP	casual linen	+$0

Mesh Laminate

For 3/8" laminate top (03) or 1 1/4" laminate top (06)

LBK	pewter mesh	+$0
LBL	steel mesh	+$0

Twill Laminate

For 3/8" laminate top (03) or 1 1/4" laminate top (06)

LBF	neutral twill	+$0
LBG	sarum twill	+$0
LBH	earthen twill	+$0
LBJ	graphite twill	+$0
LBQ	white twill	+$0

Wood-Grain Laminate

For 3/8" laminate top (03) or 1 1/4" laminate top (06)

HM	natural maple A	+$0
HP	light anigre A	+$0
LBA	clear on ash	+$0
LBR	phantom ecru	+$0
LBS	phantom cocoa	+$0
LBU	medium matte walnut	+$0
LBV	warm grey teak	+$0
LBB	oak on ash	+$0
LBC	walnut on ash	+$0
LBD	dark brown walnut	+$0
LBE	medium red walnut	+$0
76	light brown walnut A	+$0
HX	aged cherry A	+$0
HY	walnut on cherry A	+$0

Wood Veneer

For 3/8" veneer top (04) or 1 1/4" veneer top (07)

2U	light brown walnut A	+$0
40	dark brown walnut A	+$0
ED	aged cherry A	+$0
EK	medium red walnut A	+$0
EW	medium matte walnut A	+$0
ET	clear on ash A	+$0
EU	oak on ash A	+$0
EV	walnut on ash A	+$0
UL	natural maple A	+$0
UX	walnut on cherry A	+$0

Step 14. Base Finish

For 4"-high foot (4) or 4" -high foot sleeveless (5)

Sand Texture Paint

8Q	folkstone grey A	+$0
91	white A	+$0
98	studio white A	+$0
BK	black A	+$0
CL	cool grey neutral A	+$0
G1	graphite A	+$0
WL	sandstone A	+$0
WN	warm grey neutral A	+$0

Metallic Paint

CN	metallic champagne A	+$0
EH	metallic bronze A	+$0
MS	metallic silver A	+$0

Step 15. Pull Finish

For arc pull (A.)

NH	brushed nickel A	+$0
NK	black nickel A	+$0

Metallic Paint

For bar pull (K.)

CN	metallic champagne A	+$0
MS	metallic silver A	+$0

Sand Texture Paint

For bar pull (K.)

BK	black A	+$0
79	green apple A	+$15
MY3	yellow oxide A	+$15
RO	red A	+$15
TRQ	turquoise A	+$15

Smooth Paint

For bar pull (K.)

8Q	folkstone grey A	+$0
91	white A	+$0
98	studio white A	+$0
G1	graphite A	+$0
WL	sandstone A	+$0

Step 16. Counterweight

NO	no counterweight A	+$0
CB	counterweight A	+$115

Step 17. Lock Option

KA	keyed alike A	-$10
KC	keyed differently, chrome A	+$0
KD	keyed differently, black A	+$0

Metal High Credenza, Open FM800.

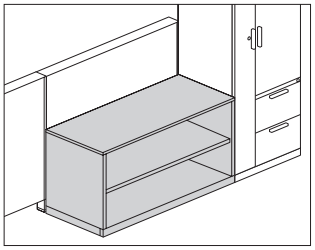

Product Information

Description

This freestanding credenza provides open storage. It has a 3/8"- or 1 1/4"-high laminate or veneer top and a painted steel case. The credenza has a 2 1/4"-high base with 1" leveling glides.

Actual credenza widths are 29 7/8", 35 7/8", or 41 7/8"; actual depth is 19 7/8".

Notes

For additional product options, see Vary Easy Program® in Appendices.

Grain direction is vertical on veneer and wood-grain laminate fronts.

Credenza has no center divider and includes 1 adjustable shelf that adjusts in 1 1/4" increments.

Order optional metal credenza shelf (FM892.) separately.

To cover adjacent credenzas with a single top, specify credenzas with no top option (NT) and order credenza top (FM890.) separately.

Dimensions

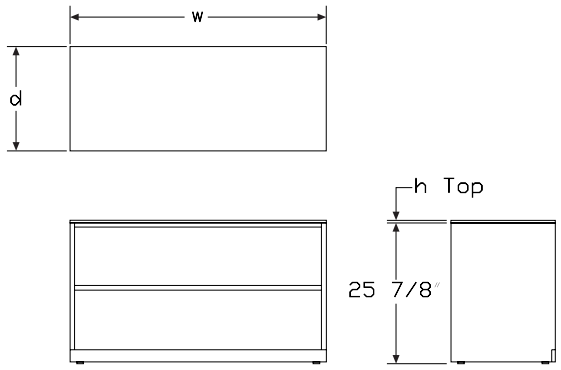

Specification Information

Step 1.

FM800. A

Step 2. Width

30	30" wide A
36	36" wide A
42	42" wide A

Step 3. Depth

20	20" deep A

Step 4. Base Height

2	2 1/4"-high base A

Step 5. Top

NT	no top A
03	3/8" laminate top A
04	3/8" veneer top A
06	1 1/4" laminate top A
07	1 1/4" veneer top A

Prices for Steps 1-5.

		2NT	203	204	206	207
FM800.	**30 20**	$1262	1378	1612	1326	1550
	36 20	$1360	1476	1709	1419	1643
	42 20	$1506	1622	1855	1559	1783

Step 6. Paint/Steel Type

SS	smooth paint on smooth steel A	+$0
XS	textured paint on smooth steel A	+$0

Step 7. Surface Finish

Metallic Paint

For smooth paint on smooth steel (SS)

CN	metallic champagne A	+$0
EH	metallic bronze A	+$0
MS	metallic silver A	+$0

Sand Texture Paint

For textured paint on smooth steel (XS)

98	studio white A	+$0
8Q	folkstone grey A	+$0
BK	black A	+$0
WL	sandstone A	+$0

Bright Sand Texture Paint

For textured paint on smooth steel (XS)

91	white A	+$0
CL	cool grey neutral A	+$0
G1	graphite A	+$0
WN	warm grey neutral A	+$0

Step 8. Top Finish

Solid-Color Laminate

For 3/8" laminate top (03) or 1 1/4" laminate top (06)

8Q	folkstone grey A	+$0
91	white A	+$0
98	studio white	+$0
CL	cool grey neutral A	+$0
LU	soft white A	+$0
WL	sandstone A	+$0
WN	warm grey neutral A	+$0

Linen Laminate

For 3/8" laminate top (03) or 1 1/4" laminate top (06)

LBM	crisp linen	+$0
LBN	classic linen	+$0
LBP	casual linen	+$0

Mesh Laminate

For 3/8" laminate top (03) or 1 1/4" laminate top (06)

LBK	pewter mesh	+$0
LBL	steel mesh	+$0

Twill Laminate

For 3/8" laminate top (03) or 1 1/4" laminate top (06)

LBF	neutral twill	+$0
LBG	sarum twill	+$0
LBH	earthen twill	+$0
LBJ	graphite twill	+$0
LBQ	white twill	+$0

Wood-Grain Laminate

For 3/8" laminate top (03) or 1 1/4" laminate top (06)

HM	natural maple A	+$0
HP	light anigre A	+$0
LBA	clear on ash	+$0
LBR	phantom ecru	+$0
LBS	phantom cocoa	+$0
LBU	medium matte walnut	+$0
LBV	warm grey teak	+$0
LBB	oak on ash	+$0
LBC	walnut on ash	+$0
LBD	dark brown walnut	+$0
LBE	medium red walnut	+$0
76	light brown walnut A	+$0
HX	aged cherry A	+$0
HY	walnut on cherry A	+$0

Wood Veneer

For 3/8" veneer top (04) or 1 1/4" veneer top (07)

2U	light brown walnut A	+$0
40	dark brown walnut A	+$0
ED	aged cherry A	+$0
EK	medium red walnut A	+$0
EW	medium matte walnut A	+$0
ET	clear on ash A	+$0
EU	oak on ash A	+$0
EV	walnut on ash A	+$0
UL	natural maple A	+$0
UX	walnut on cherry A	+$0

Metal High Credenza, with Doors FM80A. FM80K.

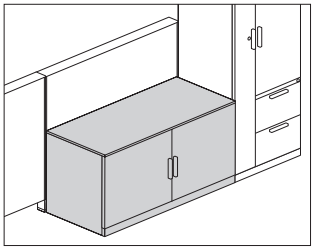

Product Information

Description

This freestanding credenza provides enclosed storage. It has a 3/8"- or 1 1/4"-high laminate or veneer top and a painted steel case with painted, laminate, or veneer front. The credenza has a 2 1/4"-high base with 1" leveling glides.

Notes

For additional product options, see Vary Easy Program® in Appendices.

Arc pull option (A.) conforms to guidelines of Americans with Disabilities Act (ADA).

Grain direction is vertical on veneer and wood-grain laminate fronts.

Credenza has no center divider and includes 1 adjustable shelf that adjusts in 1 1/4" increments.

Order optional metal credenza shelf (FM892.) separately.

To cover adjacent credenzas with a single top, specify credenzas with no top option (NT) and order credenza top (FM890.) separately.

For keyed-alike locks, see Keyed-Alike Information in Appendices.

Dimensions

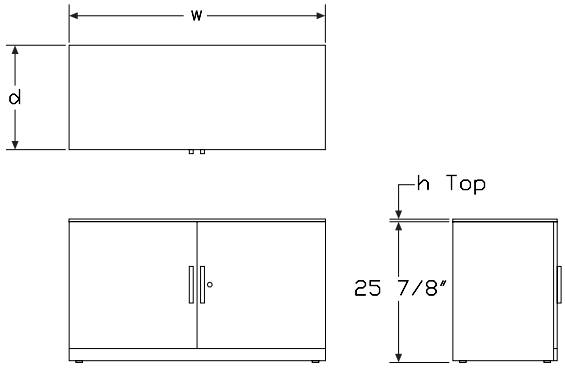

Specification Information

Step 1.

FM80 A

Step 2. Pull Type

A. arc pull A

K. bar pull A

Step 3. Width

30 30" wide A

36 36" wide A

42 42" wide A

Step 4. Depth

20 20" deep A

Step 5. Base Height

2 2 1/4"-high base A

Step 6. Door Material

P painted door A

L laminate doors A

W veneer doors A

Step 7. Top

For painted door (P) or laminate doors (L)

NT no top A

03 3/8" laminate top A

04 3/8" veneer top A

06 1 1/4" laminate top A

For veneer doors (W)

NT no top A

04 3/8" veneer top A

07 1 1/4" veneer top A

Step 8. Lock

L lock A

Prices for Steps 1-8.

			2PNTL	2P03L	2P04L	2P06L	2LNTL	2L03L
FM80A.	**30**	**20**	$1438	1557	1797	1496	1594	1713
	36	**20**	$1538	1657	1898	1593	1702	1823
	42	**20**	$1689	1808	2047	1737	1869	1988

Metal High Credenza, with Doors

continued

	2L04L	2L06L	2WNTL	2W04L	2W07L
FM80A. 30 20	$1953	1648	2344	2704	2599
36 20	$2062	1753	2518	2877	2877
42 20	$2227	1911	2780	3142	3020

	2PNTL	2P03L	2P04L	2P06L	2LNTL	2L03L
FM80K. 30 20	$1438	1557	1798	1497	1594	1713
36 20	$1538	1658	1898	1594	1703	1824
42 20	$1689	1809	2048	1738	1870	1989

	2L04L	2L06L	2WNTL	2W04L	2W07L
FM80K. 30 20	$1954	1648	2346	2706	2600
36 20	$2063	1754	2519	2878	2767
42 20	$2228	1912	2781	3142	3022

Step 9. Paint/Steel Type

SS	smooth paint on smooth steel A	+$0
XS	textured paint on smooth steel A	+$0

Step 10. Surface Finish

Metallic Paint

For smooth paint on smooth steel (SS)

CN	metallic champagne A	+$0
EH	metallic bronze A	+$0
MS	metallic silver A	+$0

Sand Texture Paint

For textured paint on smooth steel (XS)

8Q	folkstone grey A	+$0
91	white A	+$0
98	studio white A	+$0
CL	cool grey neutral A	+$0
G1	graphite A	+$0
WL	sandstone A	+$0
WN	warm grey neutral A	+$0

Step 11. Front Finish

Solid-Color Laminate

For laminate doors (L)

8Q	folkstone grey A	+$0
91	white A	+$0
98	studio white	+$0
CL	cool grey neutral A	+$0
LU	soft white A	+$0
WL	sandstone A	+$0
WN	warm grey neutral A	+$0

Linen Laminate

For laminate doors (L)

LBM	crisp linen	+$0
LBN	classic linen	+$0
LBP	casual linen	+$0

Mesh Laminate

For laminate doors (L)

LBK	pewter mesh	+$0
LBL	steel mesh	+$0

For laminate doors (L)

LBF	neutral twill	+$0
LBG	sarum twill	+$0
LBH	earthen twill	+$0
LBJ	graphite twill	+$0
LBQ	white twill	+$0

Wood-Grain Laminate

For laminate doors (L)

HM	natural maple A	+$0
HP	light anigre A	+$0
LBA	clear on ash	+$0
LBR	phantom ecru	+$0
LBS	phantom cocoa	+$0
LBU	medium matte walnut	+$0
LBV	warm grey teak	+$0
LBB	oak on ash	+$0
LBC	walnut on ash	+$0
LBD	dark brown walnut	+$0
LBE	medium red walnut	+$0
76	light brown walnut A	+$0
HX	aged cherry A	+$0
HY	walnut on cherry A	+$0

Wood Veneer

For veneer doors (W)

2U	light brown walnut A	+$0
40	dark brown walnut A	+$0
ED	aged cherry A	+$0
EK	medium red walnut A	+$0
EW	medium matte walnut A	+$0
ET	clear on ash A	+$0
EU	oak on ash A	+$0
EV	walnut on ash A	+$0
UL	natural maple A	+$0
UX	walnut on cherry A	+$0

Step 12. Top Finish

Solid-Color Laminate

For 3/8" laminate top (03) or 1 1/4" laminate top (06)

8Q	folkstone grey A	+$0
91	white A	+$0
98	studio white	+$0
CL	cool grey neutral A	+$0
LU	soft white A	+$0
WL	sandstone A	+$0
WN	warm grey neutral A	+$0

Linen Laminate

For 3/8" laminate top (03) or 1 1/4" laminate top (06)

LBM	crisp linen	+$0
LBN	classic linen	+$0
LBP	casual linen	+$0

Mesh Laminate

For 3/8" laminate top (03) or 1 1/4" laminate top (06)

LBK	pewter mesh	+$0
LBL	steel mesh	+$0

Twill Laminate

For 3/8" laminate top (03) or 1 1/4" laminate top (06)

LBF	neutral twill	+$0
LBG	sarum twill	+$0
LBH	earthen twill	+$0
LBJ	graphite twill	+$0
LBQ	white twill	+$0

Wood-Grain Laminate

For 3/8" laminate top (03) or 1 1/4" laminate top (06)

HM	natural maple A	+$0
HP	light anigre A	+$0
LBA	clear on ash	+$0
LBR	phantom ecru	+$0
LBS	phantom cocoa	+$0
LBU	medium matte walnut	+$0
LBV	warm grey teak	+$0
LBB	oak on ash	+$0
LBC	walnut on ash	+$0
LBD	dark brown walnut	+$0
LBE	medium red walnut	+$0
76	light brown walnut A	+$0
HX	aged cherry A	+$0
HY	walnut on cherry A	+$0

Wood Veneer

For 3/8" veneer top (04) or 1 1/4" veneer top (07)

2U	light brown walnut A	+$0
40	dark brown walnut A	+$0
ED	aged cherry A	+$0
EK	medium red walnut A	+$0
EW	medium matte walnut A	+$0
ET	clear on ash A	+$0
EU	oak on ash A	+$0
EV	walnut on ash A	+$0
UL	natural maple A	+$0
UX	walnut on cherry A	+$0

Step 13. Pull Finish

For arc pull (A.)

NH	brushed nickel A	+$0
NK	black nickel A	+$0

Metallic Paint

For bar pull (K.)

CN	metallic champagne A	+$0
MS	metallic silver A	+$0

Metal High Credenza, with Doors

continued

Sand Texture Paint		
For bar pull (K.)		
BK	black A	+$0
79	green apple A	+$15
MY3	yellow oxide A	+$15
RO	red A	+$15
TRQ	turquoise A	+$15

Smooth Paint		
For bar pull (K.)		
8Q	folkstone grey A	+$0
91	white A	+$0
98	studio white A	+$0
G1	graphite A	+$0
WL	sandstone A	+$0

Step 14. Lock Option		
KA	keyed alike A	-$10
KC	keyed differently, chrome A	+$0
KD	keyed differently, black A	+$0

Powered Metal Low Credenza, Open with Drawers

FMP73A
FMP73K

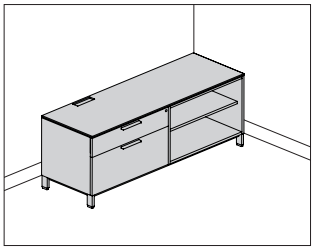

Product Information

Description

This powered credenza provides drawer storage on 1 side with open storage on the other side and can be used freestanding, to support 1 end of a surface, or attached to a Canvas wall-based frame to support a frame run. It has a 3/8"-high laminate or veneer top and a painted steel case with a painted, laminate, or veneer front. The credenza is available with 4"-high architectural feet with 1" leveling glides and has a positive interlock system that permits only 1 drawer to open at a time. Drawers have full-extension ball-bearing slides. The file drawer(s) accommodate side-to-side and front-to-back filing of letter-, legal, and A4-size hanging files. Connect™ power distributors with modular ends are ordered and installed separately.

Actual powered credenza widths are 47 3/4", 59 3/4", 65 3/4", or 71 3/4"; actual depth is 19 7/8".

Notes

For additional product options, see Vary Easy Program in Appendices.

Arc pull option (A.) conforms to guidelines of Americans with Disabilities Act (ADA).

Grain direction is vertical on veneer and wood-grain laminate fronts.

Open side of credenza includes 1 adjustable shelf that adjusts in 1 1/4" increments.

Credenza with 4"-high foot option (4) and 3/8" thin top can be used to support a Canvas wall-based frame. Order support bracket, low credenza-to-frame (FT292.) separately.

When using credenza to support 1 end of a surface, order 1 of the following products separately:

- Surface support, low credenza, adjustable height (FT299.)
- Surface support, low credenza, fixed height (FT298.)

To cover adjacent credenzas with a single top, specify credenzas with no top option (NT) and order credenza top (FM890.) separately.

Order optional metal credenza shelf (FM892.) separately.

To provide temporary guest seating on a credenza, order cushion top (FF891.) separately.

Order the following products separately:

- Connect - S310 electrical unit with connect modular connection (Y1329.)
- Connect - power entry, 4-circuit (Y1351.)
- Connect - junction block to junction block jumper, 4-circuit (Y1353.)
- Connect - H-block connector, 4-circuit (Y1354.H)

Powered credenzas must be ganged together.

For keyed-alike locks, see Keyed-Alike Information in Appendices.

Dimensions

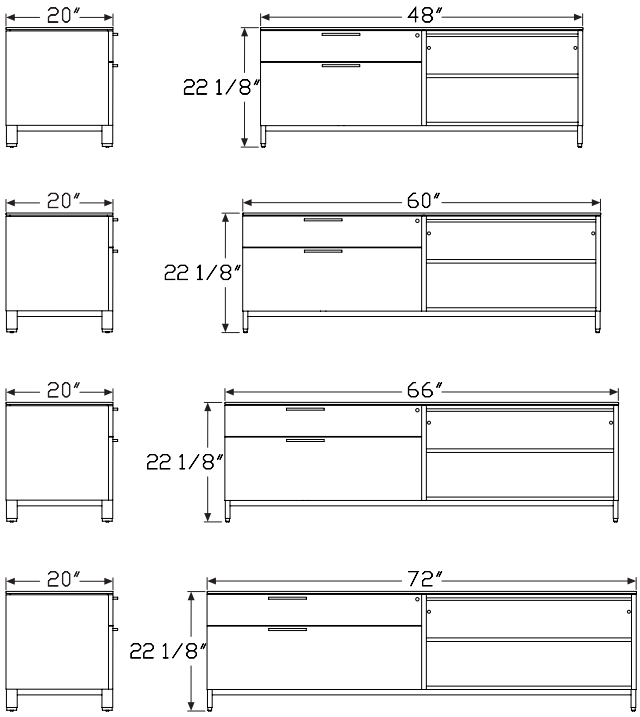

Powered Metal Low Credenza, Open with Drawers *continued*

Specification Information

Step 1.

FMP73 A

Step 2. Pull Type

A. arc pull A
K. bar pull A

Step 3. Width

48 48″ wide A
60 60″ wide A
66 66″ wide A
72 72″ wide A

Step 4. Depth

20 20″ deep A

Step 5. Base/Foot Height

4 4″-high foot A

Step 6. Configuration

For 48″ wide (48)

AA 30″ box/file left, open right A
AB open left, 30″ box/file right A

For 60″ wide (60)

AA 30″ box/file left, open right A
AB open left, 30″ box/file right A
AC 36″ box/file left, open right A
AD open left, 36″ box/file right A

For 66″ wide (66) or 72″ wide (72)

AC 36″ box/file left, open right A
AD open left, 36″ box/file right A
AE 42″ box/file left, open right A
AF open left, 42″ box/file right A

Step 7. Front Material

P painted metal front A
L laminate front A
W veneer front A

Step 8. Top

For painted metal front (P) or laminate front (L)

NT no top A
03 3/8″ laminate top A
04 3/8″ veneer top A

For veneer front (W)

NT no top A
04 3/8″ veneer top A

Step 9. Top Power Access Location

L left center access A
R right center access A

Step 10. Inside Power Access Location

N no access A
A power access inside of credenza A

Step 11. Lock

L lock A

Prices for Steps 1-11.

			4AAPNTLNL	4AAPNTLAL	4AAPNTRNL	4AAPNTRAL	4AAP03LNL	4AAP03LAL
FMP73A.	**48**	**20**	$2781	2811	2781	2811	2901	2929
	60	**20**	$2997	3027	2997	3027	3117	3146

			4AAP03RNL	4AAP03RAL	4AAP04LNL	4AAP04LAL	4AAP04RNL	4AAP04RAL
FMP73A.	**48**	**20**	$2901	2929	3136	3163	3136	3163
	60	**20**	$3117	3146	3352	3380	3352	3380

			4AALNTLNL	4AALNTLAL	4AALNTRNL	4AALNTRAL	4AAL03LNL	4AAL03LAL
FMP73A.	**48**	**20**	$2946	2976	2946	2976	3064	3093
	60	**20**	$3176	3205	3176	3205	3296	3324

			4AAL03RNL	4AAL03RAL	4AAL04LNL	4AAL04LAL	4AAL04RNL	4AAL04RAL
FMP73A.	**48**	**20**	$3064	3093	3301	3328	3301	3328
	60	**20**	$3296	3324	3531	3559	3531	3559

			4AAWNTLNL	4AAWNTLAL	4AAWNTRNL	4AAWNTRAL	4AAW04LNL	4AAW04LAL
FMP73A.	**48**	**20**	$3536	3563	3536	3563	3888	3916
	60	**20**	$3857	3885	3857	3885	4209	4237

			4AAW04RNL	4AAW04RAL	4ABPNTLNL	4ABPNTLAL	4ABPNTRNL	4ABPNTRAL
FMP73A.	**48**	**20**	$3888	3916	2781	2811	2781	2811
	60	**20**	$4209	4237	2997	3027	2997	3027

Powered Metal Low Credenza, Open with Drawers *continued*

	4ABP03LNL	4ABP03LAL	4ABP03RNL	4ABP03RAL	4ABP04LNL	4ABP04LAL
FMP73A. 48 20	$2901	2929	2901	2929	3136	3163
60 20	$3117	3146	3117	3146	3352	3380

	4ABP04RNL	4ABP04RAL	4ABLNTLNL	4ABLNTLAL	4ABLNTRNL	4ABLNTRAL
FMP73A. 48 20	$3136	3163	2946	2976	2946	2976
60 20	$3352	3380	3176	3205	3176	3205

	4ABL03LNL	4ABL03LAL	4ABL03RNL	4ABL03RAL	4ABL04LNL	4ABL04LAL
FMP73A. 48 20	$3064	3093	3064	3093	3301	3328
60 20	$3296	3324	3296	3324	3531	3559

	4ABL04RNL	4ABL04RAL	4ABWNTLNL	4ABWNTLAL	4ABWNTRNL	4ABWNTRAL
FMP73A. 48 20	$3301	3328	3536	3563	3536	3563
60 20	$3531	3559	3857	3885	3857	3885

	4ABW04LNL	4ABW04LAL	4ABW04RNL	4ABW04RAL	4ACPNTLNL	4ACPNTLAL
FMP73A. 48 20	$3888	3916	3888	3916	—	—
60 20	$4209	4237	4209	4237	3144	3171
66 20	—	—	—	—	$3098	3127
72 20	—	—	—	—	$3132	3159

	4ACPNTRNL	4ACPNTRAL	4ACP03LNL	4ACP03LAL	4ACP03RNL	4ACP03RAL
FMP73A. 60 20	$3069	3097	3261	3290	3189	3216
66 20	$3098	3127	3217	3246	3217	3246
72 20	$3144	3171	3261	3290	3261	3290

	4ACP04LNL	4ACP04LAL	4ACP04RNL	4ACP04RAL	4ACLNTLNL	4ACLNTLAL
FMP73A. 60 20	$3422	3450	3422	3450	3264	3294
66 20	$3452	3481	3452	3481	3285	3313
72 20	$3495	3524	3495	3524	3331	3361

	4ACLNTRNL	4ACLNTRAL	4ACL03LNL	4ACL03LAL	4ACL03RNL	4ACL03RAL
FMP73A. 60 20	$3264	3294	3370	3399	3370	3399
66 20	$3285	3313	3403	3431	3403	3431
72 20	$3331	3361	3448	3478	3448	3478

	4ACL04LNL	4ACL04LAL	4ACL04RNL	4ACL04RAL	4ACWNTLNL	4ACWNTLAL
FMP73A. 60 20	$3617	3646	3617	3646	3950	3979
66 20	$3637	3666	3637	3666	4104	4132
72 20	$3684	3711	3684	3711	4175	4203

	4ACWNTRNL	4ACWNTRAL	4ACW04LNL	4ACW04LAL	4ACW04RNL	4ACW04RAL
FMP73A. 60 20	$3950	3979	4304	4333	4304	4333
66 20	$4104	4132	4456	4485	4456	4485
72 20	$4175	4203	4528	4558	4528	4558

	4AEPNTLNL	4AEPNTLAL	4AEPNTRNL	4AEPNTRAL	4AEP03LNL	4AEP03LAL
FMP73A. 66 20	$3200	3228	3200	3228	3318	3348
72 20	$3247	3274	3247	3274	3365	3393

	4AEP03RNL	4AEP03RAL	4AEP04LNL	4AEP04LAL	4AEP04RNL	4AEP04RAL
FMP73A. 66 20	$3318	3348	3553	3581	3553	3581
72 20	$3365	3393	3599	3628	3599	3628

	4AELNTLNL	4AELNTLAL	4AELNTRNL	4AELNTRAL	4AEL03LNL	4AEL03LAL
FMP73A. 66 20	$3392	3420	3392	3420	3509	3538
72 20	$3440	3470	3440	3470	3559	3588

	4AEL03RNL	4AEL03RAL	4AEL04LNL	4AEL04LAL	4AEL04RNL	4AEL04RAL
FMP73A. 66 20	$3509	3538	3744	3773	3744	3773
72 20	$3559	3588	3795	3823	3795	3823

	4AEWNTLNL	4AEWNTLAL	4AEWNTRNL	4AEWNTRAL	4AEW04LNL	4AEW04LAL
FMP73A. 66 20	$4191	4220	4191	4220	4543	4572
72 20	$4191	4220	4345	4375	4543	4572

	4AEW04RNL	4AEW04RAL	4ADPNTLNL	4ADPNTLAL	4ADPNTRNL	4ADPNTRAL
FMP73A. 60 20	—	—	$3069	3097	3069	3097
66 20	$4543	4572	3098	3127	3098	3127
72 20	$4652	4680	3132	3159	3144	3171

	4ADP03LNL	4ADP03LAL	4ADP03RNL	4ADP03RAL	4ADP04LNL	4ADP04LAL
FMP73A. 60 20	$3189	3216	3189	3216	3422	3450
66 20	$3217	3246	3217	3246	3452	3481
72 20	$3261	3290	3261	3290	3495	3524

	4ADP04RNL	4ADP04RAL	4ADLNTLNL	4ADLNTLAL	4ADLNTRNL	4ADLNTRAL
FMP73A. 60 20	$3422	3450	3264	3294	3264	3294
66 20	$3452	3481	3285	3313	3285	3313
72 20	$3495	3524	3331	3361	3331	3361

	4ADL03LNL	4ADL03LAL	4ADL03RNL	4ADL03RAL	4ADL04LNL	4ADL04LAL
FMP73A. 60 20	$3370	3399	3370	3399	3617	3646
66 20	$3403	3431	3403	3431	3637	3666
72 20	$3448	3478	3448	3478	3684	3711

	4ADL04RNL	4ADL04RAL	4ADWNTLNL	4ADWNTLAL	4ADWNTRNL	4ADWNTRAL
FMP73A. 60 20	$3617	3646	3950	3979	3950	3979
66 20	$3637	3666	4104	4132	4104	4132
72 20	$3684	3711	4175	4203	4175	4203

	4ADW04LNL	4ADW04LAL	4ADW04RNL	4ADW04RAL	4AFPNTLNL	4AFPNTLAL
FMP73A. 60 20	$4304	4333	4304	4333	—	—

Powered Metal Low Credenza, Open with Drawers *continued*

66	20	$4456	4485	4456	4485	3200	3228
72	20	$4528	4558	4528	4558	3247	3274

		4AFPNTRNL	4AFPNTRAL	4AFP03LNL	4AFP03LAL	4AFP03RNL	4AFP03RAL
FMP73A. 66	20	$3200	3228	3318	3348	3318	3348
72	20	$3247	3274	3365	3393	3365	3393

		4AFP04LNL	4AFP04LAL	4AFP04RNL	4AFP04RAL	4AFLNTLNL	4AFLNTLAL
FMP73A. 66	20	$3553	3581	3553	3581	3392	3420
72	20	$3599	3628	3599	3628	3440	3470

		4AFLNTRNL	4AFLNTRAL	4AFL03LNL	4AFL03LAL	4AFL03RNL	4AFL03RAL
FMP73A. 66	20	$3392	3420	3509	3538	3509	3538
72	20	$3440	3470	3559	3588	3559	3588

		4AFL04LNL	4AFL04LAL	4AFL04RNL	4AFL04RAL	4AFWNTLNL	4AFWNTLAL
FMP73A. 66	20	$3744	3773	3744	3773	4191	4220
72	20	$3795	3823	3795	3823	4345	4375

		4AFWNTRNL	4AFWNTRAL	4AFW04LNL	4AFW04LAL	4AFW04RNL	4AFW04RAL
FMP73A. 66	20	$4191	4220	4543	4572	4543	4572
72	20	$4345	4375	4652	4680	4652	4680

		4AAPNTLNL	4AAPNTLAL	4AAPNTRNL	4AAPNTRAL	4AAP03LNL	4AAP03LAL
FMP73K. 48	20	$2916	2916	2948	2948	3042	3042
60	20	$3143	3175	3143	3175	3268	3299

		4AAP03RNL	4AAP03RAL	4AAP04LNL	4AAP04LAL	4AAP04RNL	4AAP04RAL
FMP73K. 48	20	$3071	3071	3288	3288	3316	3316
60	20	$3268	3299	3515	3544	3515	3544

		4AALNTLNL	4AALNTLAL	4AALNTRNL	4AALNTRAL	4AAL03LNL	4AAL03LAL
FMP73K. 48	20	$3090	3090	3121	3121	3213	3213
60	20	$3330	3361	3330	3361	3456	3485

		4AAL03RNL	4AAL03RAL	4AAL04LNL	4AAL04LAL	4AAL04RNL	4AAL04RAL
FMP73K. 48	20	$3243	3243	3461	3461	3490	3490
60	20	$3456	3485	3702	3732	3702	3732

		4AAWNTLNL	4AAWNTLAL	4AAWNTRNL	4AAWNTRAL	4AAW04LNL	4AAW04LAL
FMP73K. 48	20	$3708	3708	3736	3736	4077	4077
60	20	$4044	4074	4044	4074	4414	4443

		4AAW04RNL	4AAW04RAL	4ABPNTLNL	4ABPNTLAL	4ABPNTRNL	4ABPNTRAL
FMP73K. 48	20	$4107	4107	2916	2916	2948	2948
60	20	$4414	4443	3330	3175	3143	3175

		4ABP03LNL	4ABP03LAL	4ABP03RNL	4ABP03RAL	4ABP04LNL	4ABP04LAL
FMP73K. 48	20	$3042	3042	3071	3071	3288	3288
60	20	$3268	3299	3268	3299	3515	3544

		4ABP04RNL	4ABP04RAL	4ABLNTLNL	4ABLNTLAL	4ABLNTRNL	4ABLNTRAL
FMP73K. 48	20	$3316	3316	3090	3090	3121	3121
60	20	$3515	3544	3143	3361	3330	3361

		4ABL03LNL	4ABL03LAL	4ABL03RNL	4ABL03RAL	4ABL04LNL	4ABL04LAL
FMP73K. 48	20	$3213	3213	3243	3243	3461	3461
60	20	$3456	3485	3456	3485	3448	3732

		4ABL04RNL	4ABL04RAL	4ABWNTLNL	4ABWNTLAL	4ABWNTRNL	4ABWNTRAL
FMP73K. 48	20	$3490	3490	3708	3708	3736	3736
60	20	$3702	3732	4044	4074	4044	4074

		4ABW04LNL	4ABW04LAL	4ABW04RNL	4ABW04RAL	4ACPNTLNL	4ACPNTLAL
FMP73K. 48	20	$4077	4077	4107	4107	—	—
60	20	$4414	4443	4414	4443	3297	3325
66	20	—	—	—	—	$3249	3279
72	20	—	—	—	—	$3285	3313

		4ACPNTRNL	4ACPNTRAL	4ACP03LNL	4ACP03LAL	4ACP03RNL	4ACP03RAL
FMP73K. 60	20	$3218	3248	3420	3450	3344	3372
66	20	$3249	3279	3373	3403	3373	3403
72	20	$3297	3325	3420	3450	3420	3450

		4ACP04LNL	4ACP04LAL	4ACP04RNL	4ACP04RAL	4ACLNTLNL	4ACLNTLAL
FMP73K. 60	20	$3589	3618	3589	3618	3423	3454
66	20	$3619	3650	3619	3650	3445	3474
72	20	$3665	3696	3665	3696	3493	3524

		4ACLNTRNL	4ACLNTRAL	4ACL03LNL	4ACL03LAL	4ACL03RNL	4ACL03RAL
FMP73K. 60	20	$3423	3454	3534	3564	3534	3564
66	20	$3445	3474	3568	3597	3568	3597
72	20	$3493	3524	3616	3647	3616	3647

		4ACL04LNL	4ACL04LAL	4ACL04RNL	4ACL04RAL	4ACWNTLNL	4ACWNTLAL
FMP73K. 60	20	$3793	3823	3793	3823	4142	4172
66	20	$3813	3844	3813	3844	4304	4333
72	20	$3863	3892	3863	3892	4378	4407

		4ACWNTRNL	4ACWNTRAL	4ACW04LNL	4ACW04LAL	4ACW04RNL	4ACW04RAL
FMP73K. 60	20	$4142	4172	4513	4544	4513	4544
66	20	$4304	4333	4672	4703	4672	4703
72	20	$4378	4407	4749	4779	4749	4779

Powered Metal Low Credenza, Open with Drawers *continued*

	4AEPNTLNL	4AEPNTLAL	4AEPNTRNL	4AEPNTRAL	4AEP03LNL	4AEP03LAL
FMP73K. 66 20	$3356	3385	3356	3385	3480	3510
72 20	$3405	3433	3405	3433	3529	3558

	4AEP03RNL	4AEP03RAL	4AEP04LNL	4AEP04LAL	4AEP04RNL	4AEP04RAL
FMP73K. 66 20	$3480	3510	3726	3756	3726	3756
72 20	$3529	3558	3774	3805	3774	3805

	4AELNTLNL	4AELNTLAL	4AELNTRNL	4AELNTRAL	4AEL03LNL	4AEL03LAL
FMP73K. 66 20	$3557	3587	3557	3587	3679	3710
72 20	$3607	3639	3607	3639	3732	3762

	4AEL03RNL	4AEL03RAL	4AEL04LNL	4AEL04LAL	4AEL04RNL	4AEL04RAL
FMP73K. 66 20	$3679	3710	3926	3956	3926	3956
72 20	$3732	3762	3979	4008	3979	4008

	4AEWNTLNL	4AEWNTLAL	4AEWNTRNL	4AEWNTRAL	4AEW04LNL	4AEW04LAL
FMP73K. 66 20	$4394	4425	4394	4425	4764	4794
72 20	$4394	4425	4557	4587	4764	4794

	4AEW04RNL	4AEW04RAL	4ADPNTLNL	4ADPNTLAL	4ADPNTRNL	4ADPNTRAL
FMP73K. 60 20	—	—	$3218	3248	3218	3248
66 20	$4764	4794	3249	3279	3249	3279
72 20	$4878	4908	3285	3313	3297	3325

	4ADP03LNL	4ADP03LAL	4ADP03RNL	4ADP03RAL	4ADP04LNL	4ADP04LAL
FMP73K. 60 20	$3344	3372	3344	3372	3589	3618
66 20	$3373	3403	3373	3403	3619	3650
72 20	$3420	3450	3420	3450	3665	3696

	4ADP04RNL	4ADP04RAL	4ADLNTLNL	4ADLNTLAL	4ADLNTRNL	4ADLNTRAL
FMP73K. 60 20	$3589	3618	3423	3454	3423	3454
66 20	$3619	3650	3445	3474	3445	3474
72 20	$3665	3696	3493	3524	3493	3524

	4ADL03LNL	4ADL03LAL	4ADL03RNL	4ADL03RAL	4ADL04LNL	4ADL04LAL
FMP73K. 60 20	$3534	3564	3534	3564	3793	3823
66 20	$3568	3597	3568	3597	3813	3844
72 20	$3616	3647	3616	3647	3863	3892

	4ADL04RNL	4ADL04RAL	4ADWNTLNL	4ADWNTLAL	4ADWNTRNL	4ADWNTRAL
FMP73K. 60 20	$3793	3823	4142	4172	4142	4172
66 20	$3813	3844	4304	4333	4304	4333
72 20	$3863	3892	4378	4407	4378	4407

	4ADW04LNL	4ADW04LAL	4ADW04RNL	4ADW04RAL	4AFPNTLNL	4AFPNTLAL
FMP73K. 60 20	$4513	4544	4513	4544	—	—
66 20	$4672	4703	4672	4703	3356	3385
72 20	$4749	4779	4749	4779	3405	3433

	4AFPNTRNL	4AFPNTRAL	4AFP03LNL	4AFP03LAL	4AFP03RNL	4AFP03RAL
FMP73K. 66 20	$3356	3385	3480	3510	3480	3510
72 20	$3405	3433	3529	3558	3529	3558

	4AFP04LNL	4AFP04LAL	4AFP04RNL	4AFP04RAL	4AFLNTLNL	4AFLNTLAL
FMP73K. 66 20	$3726	3756	3726	3756	3557	3587
72 20	$3774	3805	3774	3805	3607	3639

	4AFLNTRNL	4AFLNTRAL	4AFL03LNL	4AFL03LAL	4AFL03RNL	4AFL03RAL
FMP73K. 66 20	$3557	3587	3679	3710	3679	3710
72 20	$3607	3639	3732	3762	3732	3762

	4AFL04LNL	4AFL04LAL	4AFL04RNL	4AFL04RAL	4AFWNTLNL	4AFWNTLAL
FMP73K. 66 20	$3926	3956	3926	3956	4394	4425
72 20	$3979	4008	3979	4008	4557	4587

	4AFWNTRNL	4AFWNTRAL	4AFW04LNL	4AFW04LAL	4AFW04RNL	4AFW04RAL
FMP73K. 66 20	$4394	4425	4764	4794	4764	4794
72 20	$4557	4587	4878	4908	4878	4908

Step 12. Paint/Steel Type		
SS	smooth paint on smooth steel A	+$0
XS	textured paint on smooth steel A	+$0

Step 13. Surface Finish		
Metallic Paint		
For smooth paint on smooth steel (SS)		
CN	metallic champagne A	+$0
EH	metallic bronze A	+$0
MS	metallic silver A	+$0
Sand Texture Paint		
For textured paint on smooth steel (XS)		
91	white A	+$0
BK	black A	+$0
CL	cool grey neutral A	+$0
G1	graphite A	+$0
WN	warm grey neutral A	+$0
98	studio white A	+$0
8Q	folkstone grey A	+$0
WL	sandstone A	+$0

Powered Metal Low Credenza, Open with Drawers *continued*

Step 14. Front Finish

Solid-Color Laminate
For laminate front (L)

8Q	folkstone grey A	+$0
91	white A	+$0
98	studio white	+$0
CL	cool grey neutral A	+$0
LU	soft white A	+$0
WL	sandstone A	+$0
WN	warm grey neutral A	+$0

Linen Laminate
For laminate front (L)

LBM	crisp linen	+$0
LBN	classic linen	+$0
LBP	casual linen	+$0

Mesh Laminate
For laminate front (L)

LBK	pewter mesh	+$0
LBL	steel mesh	+$0

Twill Laminate
For laminate front (L)

LBF	neutral twill	+$0
LBG	sarum twill	+$0
LBH	earthen twill	+$0
LBJ	graphite twill	+$0
LBQ	white twill	+$0

Wood-Grain Laminate
For laminate front (L)

HM	natural maple A	+$0
HP	light anigre A	+$0
LBA	clear on ash	+$0
LBR	phantom ecru	+$0
LBS	phantom cocoa	+$0
LBU	medium matte walnut	+$0
LBV	warm grey teak	+$0
LBB	oak on ash	+$0
LBC	walnut on ash	+$0
LBD	dark brown walnut	+$0
LBE	medium red walnut	+$0
76	light brown walnut A	+$0
HX	aged cherry A	+$0
HY	walnut on cherry A	+$0

Wood Veneer
For veneer front (W)

2U	light brown walnut A	+$0
40	dark brown walnut A	+$0
ED	aged cherry A	+$0
EK	medium red walnut A	+$0
EW	medium matte walnut A	+$0
ET	clear on ash A	+$0
EV	walnut on ash A	+$0
UL	natural maple A	+$0
UX	walnut on cherry A	+$0

Step 15. Top Finish

Solid-Color Laminate
For 3/8" laminate top (03)

8Q	folkstone grey A	+$0
91	white A	+$0
98	studio white	+$0
CL	cool grey neutral A	+$0
LU	soft white A	+$0
WL	sandstone A	+$0
WN	warm grey neutral A	+$0

Linen Laminate
For 3/8" laminate top (03)

LBM	crisp linen	+$0
LBN	classic linen	+$0
LBP	casual linen	+$0

Mesh Laminate
For 3/8" laminate top (03)

LBK	pewter mesh	+$0
LBL	steel mesh	+$0

Twill Laminate
For 3/8" laminate top (03)

LBF	neutral twill	+$0
LBG	sarum twill	+$0
LBH	earthen twill	+$0
LBJ	graphite twill	+$0
LBQ	white twill	+$0

Wood-Grain Laminate

For 3/8" laminate top (03)

HM	natural maple A	+$0
HP	light anigre A	+$0
LBA	clear on ash	+$0
LBR	phantom ecru	+$0
LBS	phantom cocoa	+$0
LBU	medium matte walnut	+$0
LBV	warm grey teak	+$0
LBB	oak on ash	+$0
LBC	walnut on ash	+$0
LBD	dark brown walnut	+$0
LBE	medium red walnut	+$0
76	light brown walnut A	+$0
HX	aged cherry A	+$0
HY	walnut on cherry A	+$0

Wood Veneer

For 3/8" veneer top (04)

2U	light brown walnut A	+$0
40	dark brown walnut A	+$0
ED	aged cherry A	+$0
EK	medium red walnut A	+$0
EW	medium matte walnut A	+$0
ET	clear on ash A	+$0
EV	walnut on ash A	+$0
UL	natural maple A	+$0
UX	walnut on cherry A	+$0

Step 16. Base Finish

Sand Texture Paint

8Q	folkstone grey A	+$0
91	white A	+$0
98	studio white A	+$0
BK	black A	+$0
CL	cool grey neutral A	+$0
G1	graphite A	+$0
WL	sandstone A	+$0
WN	warm grey neutral A	+$0

Metallic Paint

CN	metallic champagne A	+$0
EH	metallic bronze A	+$0
MS	metallic silver A	+$0

Step 17. Pull Finish

For arc pull (A.)

NH	brushed nickel A	+$0
NK	black nickel A	+$0

Metallic Paint

For bar pull (K.)

CN	metallic champagne A	+$0
MS	metallic silver A	+$0

Sand Texture Paint

For bar pull (K.)

BK	black A	+$0
79	green apple A	+$15
MY3	yellow oxide A	+$15
RO	red A	+$15
TRQ	turquoise A	+$15

Smooth Paint

For bar pull (K.)

8Q	folkstone grey A	+$0
91	white A	+$0
98	studio white A	+$0
G1	graphite A	+$0
WL	sandstone A	+$0

Step 18. Counterweight

NO	no counterweight A	+$0
CB	counterweight A	+$115

Step 19. Lock Option

KA	keyed alike A	-$10
KC	keyed differently, chrome A	+$0
KD	keyed differently, black A	+$0

Powered Metal Low Credenza, with Drawers

FMP72A
FMP72K

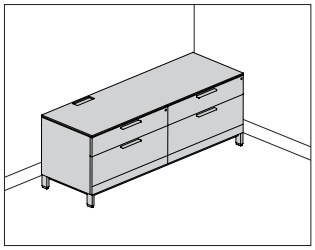

Product Information

Description

This powered credenza provides enclosed filing and storage and can be used freestanding, to support 1 end of a surface, or attached to a Canvas wall-based frame to support a frame run. It has a 3/8"-high laminate or veneer top and a painted steel case with a painted, laminate, or veneer front. The credenza is available with 4"-high architectural feet with 1" leveling glides and has a positive interlock system that permits only 1 drawer to open at a time. Drawers have full-extension ball-bearing slides. The file drawer(s) accommodate side-to-side and front-to-back filing of letter-, legal, and A4-size hanging files. Connect™ power distributors with modular ends are ordered and installed separately.

Actual powered credenza widths are 59 3/4", or 71 3/4"; actual depth is 19 7/8".

Notes

For additional product options, see Vary Easy Program in Appendices.

Arc pull option (A.) conforms to guidelines of Americans with Disabilities Act (ADA).

Grain direction is vertical on veneer and wood-grain laminate fronts.

60"-and 72"-wide credenzas have 2 box drawers and 2 file drawers.

Credenza with 4"-high foot option (4) and 3/8" thin top can be used to support a Canvas wall-based frame. Order support bracket, low credenza-to-frame (FT292.) separately.

When using credenza to support 1 end of a surface, order 1 of the following products separately:

- Surface support, low credenza, adjustable height (FT299.)
- Surface support, low credenza, fixed height (FT298.)

To cover adjacent credenzas with a single top, specify credenzas with no top option (NT) and order credenza top (FM890.) separately.

To provide temporary guest seating on a credenza, order cushion top (FF891.) separately.

Order the following products separately:

- Connect - S310 electrical unit with connect modular connection (Y1329.)
- Connect - power entry, 4-circuit (Y1351.)
- Connect - junction block to junction block jumper, 4-circuit (Y1353.)
- Connect - H-block connector, 4-circuit (Y1354.H)

Powered credenzas must be ganged together.

For keyed-alike locks, see Keyed-Alike Information in Appendices.

Dimensions

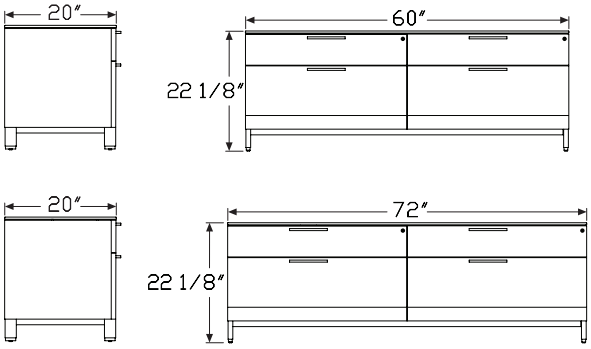

Powered Metal Low Credenza, with Drawers *continued*

Specification Information

Step 1.

FMP72 A

Step 2. Pull Type

A. arc pull A

K. bar pull A

Step 3. Width

60 60" wide A

72 72" wide A

Step 4. Depth

20 20" deep A

Step 5. Base/Foot Height

4 4"-high foot A

Step 6. Configuration

BF box/file A

Step 7. Front Material

P painted metal front A

L laminate front A

W veneer front A

Step 8. Top

For painted metal front (P) or laminate front (L)

NT no top A

03 3/8" laminate top A

04 3/8" veneer top A

For veneer front (W)

NT no top A

04 3/8" veneer top A

Step 9. Power Access Location

L left center access A

R right center access A

Step 10. Lock

L lock A

Prices for Steps 1-10.

	4BFPNTLL	4BFPNTRL	4BFP03LL	4BFP03RL	4BFP04LL	4BFP04RL
FMP72A. 60 20	$3350	3350	3468	3468	3703	3703
72 20	$3695	3695	3813	3813	4049	4049

	4BFLNTLL	4BFLNTRL	4BFL03LL	4BFL03RL	4BFL04LL	4BFL04RL
FMP72A. 60 20	$3561	3561	3680	3680	3914	3914
72 20	$3908	3908	4024	4024	4259	4259

	4BFWNTLL	4BFWNTRL	4BFW04LL	4BFW04RL
FMP72A. 60 20	$4544	4544	4826	4826
72 20	$4922	4922	5274	5274

	4BFPNTLL	4BFPNTRL	4BFP03LL	4BFP03RL	4BFP04LL	4BFP04RL
FMP72K. 60 20	$3255	3255	3370	3370	3598	3598
72 20	$3700	3590	3705	3705	4033	3934

	4BFLNTLL	4BFLNTRL	4BFL03LL	4BFL03RL	4BFL04LL	4BFL04RL
FMP72K. 60 20	$3460	3460	3564	3576	3803	3803
72 20	$3797	3797	3910	3910	4360	4138

	4BFWNTLL	4BFWNTRL	4BFW04LL	4BFW04RL
FMP72K. 60 20	$4415	4415	4689	4689
72 20	$4783	4783	5180	5124

Step 11. Paint/Steel Type

SS smooth paint on smooth steel A +$0

XS textured paint on smooth steel A +$0

Step 12. Surface Finish

Metallic Paint

For smooth paint on smooth steel (SS)

CN metallic champagne A +$0

EH metallic bronze A +$0

MS metallic silver A +$0

Sand Texture Paint

For textured paint on smooth steel (XS)

8Q folkstone grey A +$0

91 white A +$0

98 studio white A +$0

BK black A +$0

CL cool grey neutral A +$0

G1 graphite A +$0

WL sandstone A +$0

WN warm grey neutral A +$0

Powered Metal Low Credenza, with Drawers *continued*

Step 13. Front Finish

Solid-Color Laminate

For laminate front (L)

8Q	folkstone grey [A]	+$0
91	white [A]	+$0
98	studio white	+$0
CL	cool grey neutral [A]	+$0
LU	soft white [A]	+$0
WL	sandstone [A]	+$0
WN	warm grey neutral [A]	+$0

Linen Laminate

For laminate front (L)

LBM	crisp linen	+$0
LBN	classic linen	+$0
LBP	casual linen	+$0

Mesh Laminate

For laminate front (L)

LBK	pewter mesh	+$0
LBL	steel mesh	+$0

Twill Laminate

For laminate front (L)

LBF	neutral twill	+$0
LBG	sarum twill	+$0
LBH	earthen twill	+$0
LBJ	graphite twill	+$0
LBQ	white twill	+$0

Wood-Grain Laminate

For laminate front (L)

HM	natural maple [A]	+$0
HP	light anigre [A]	+$0
LBA	clear on ash	+$0
LBR	phantom ecru	+$0
LBS	phantom cocoa	+$0
LBU	medium matte walnut	+$0
LBV	warm grey teak	+$0
LBB	oak on ash	+$0
LBC	walnut on ash	+$0
LBD	dark brown walnut	+$0
LBE	medium red walnut	+$0
76	light brown walnut [A]	+$0
HX	aged cherry [A]	+$0
HY	walnut on cherry [A]	+$0

Wood Veneer

For veneer front (W)

2U	light brown walnut [A]	+$0
40	dark brown walnut [A]	+$0
ED	aged cherry [A]	+$0
EK	medium red walnut [A]	+$0
EW	medium matte walnut [A]	+$0
ET	clear on ash [A]	+$0
EV	walnut on ash [A]	+$0
UL	natural maple [A]	+$0
UX	walnut on cherry [A]	+$0

Step 14. Top Finish

Solid-Color Laminate

For 3/8" laminate top (03)

8Q	folkstone grey [A]	+$0
91	white [A]	+$0
98	studio white	+$0
CL	cool grey neutral [A]	+$0
LU	soft white [A]	+$0
WL	sandstone [A]	+$0
WN	warm grey neutral [A]	+$0

Linen Laminate

For 3/8" laminate top (03)

LBM	crisp linen	+$0
LBN	classic linen	+$0
LBP	casual linen	+$0

Mesh Laminate

For 3/8" laminate top (03)

LBK	pewter mesh	+$0
LBL	steel mesh	+$0

Twill Laminate

For 3/8" laminate top (03)

LBF	neutral twill	+$0
LBG	sarum twill	+$0
LBH	earthen twill	+$0
LBJ	graphite twill	+$0
LBQ	white twill	+$0

Wood-Grain Laminate

For 3/8" laminate top (03)

HM	natural maple A	+$0
HP	light anigre A	+$0
LBA	clear on ash	+$0
LBR	phantom ecru	+$0
LBS	phantom cocoa	+$0
LBU	medium matte walnut	+$0
LBV	warm grey teak	+$0
LBB	oak on ash	+$0
LBC	walnut on ash	+$0
LBD	dark brown walnut	+$0
LBE	medium red walnut	+$0
76	light brown walnut A	+$0
HX	aged cherry A	+$0
HY	walnut on cherry A	+$0

Wood Veneer

For 3/8" veneer top (04)

2U	light brown walnut A	+$0
40	dark brown walnut A	+$0
ED	aged cherry A	+$0
EK	medium red walnut A	+$0
EW	medium matte walnut A	+$0
ET	clear on ash A	+$0
EV	walnut on ash A	+$0
UL	natural maple A	+$0
UX	walnut on cherry A	+$0

Step 15. Base Finish

Sand Texture Paint

8Q	folkstone grey A	+$0
91	white A	+$0
98	studio white A	+$0
BK	black A	+$0
CL	cool grey neutral A	+$0
G1	graphite A	+$0
WL	sandstone A	+$0
WN	warm grey neutral A	+$0

Metallic Paint

CN	metallic champagne A	+$0
EH	metallic bronze A	+$0
MS	metallic silver A	+$0

Step 16. Pull Finish

For arc pull (A.)

NH	brushed nickel A	+$0
NK	black nickel A	+$0

Metallic Paint

For bar pull (K.)

CN	metallic champagne A	+$0
MS	metallic silver A	+$0

Sand Texture Paint

For bar pull (K.)

BK	black A	+$0
79	green apple A	+$15
MY3	yellow oxide A	+$15
RO	red A	+$15
TRQ	turquoise A	+$15

Smooth Paint

For bar pull (K.)

8Q	folkstone grey A	+$0
91	white A	+$0
98	studio white A	+$0
G1	graphite A	+$0
WL	sandstone A	+$0

Step 17. Counterweight

NO	no counterweight A	+$0
CB	counterweight A	+$115

Step 18. Lock Option

KA	keyed alike A	-$10
KC	keyed differently, chrome A	+$0
KD	keyed differently, black A	+$0

Powered Metal Low Credenza, Doors with Drawers

FMP74A
FMP74K

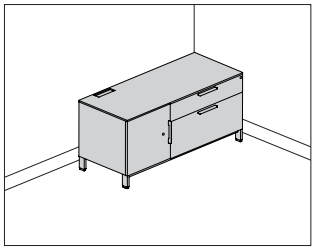

Product Information

Description

This powered credenza provides enclosed filing and storage and can be used freestanding, to support 1 end of a surface, or attached to a Canvas wall-based frame to support a frame run. It has a 3/8"-high laminate or veneer top and a painted steel case with a painted, laminate, or veneer front. The credenza is available with 4"-high architectural feet with 1" leveling glides and has a positive interlock system that permits only 1 drawer to open at a time. Drawers have full-extension ball-bearing slides. The file drawer(s) accommodate side-to-side and front-to-back filing of letter-, legal, and A4-size hanging files. Connect™ power distributors with modular ends are ordered and installed separately.

Actual powered credenza widths are 47 3/4", 59 3/4", or 71 3/4"; actual depth is 19 7/8".

Notes

For additional product options, see Vary Easy Program in Appendices.

Arc pull option (A.) conforms to guidelines of Americans with Disabilities Act (ADA).

Grain direction is vertical on veneer and wood-grain laminate fronts.

Credenza with 4"-high foot option (4) and 3/8" thin top can be used to support a Canvas wall-based frame. Order support bracket, low credenza-to-frame (FT292.) separately.

When using credenza to support 1 end of a surface, order 1 of the following products separately:

- Surface support, low credenza, adjustable height (FT299.)
- Surface support, low credenza, fixed height (FT298.)

To cover adjacent credenzas with a single top, specify credenzas with no top option (NT) and order credenza top (FM890.) separately.

Order optional metal credenza shelf (FM892.) separately.

To provide temporary guest seating on a credenza, order cushion top (FF891.) separately.

Order the following products separately:

- Connect - S310 electrical unit with connect modular connection (Y1329.)
- Connect - power entry, 4-circuit (Y1351.)
- Connect - junction block to junction block jumper, 4-circuit (Y1353.)
- Connect - H-block connector, 4-circuit (Y1354.H)

Powered credenzas must be ganged together.

For keyed-alike locks, see Keyed-Alike Information in Appendices.

Dimensions

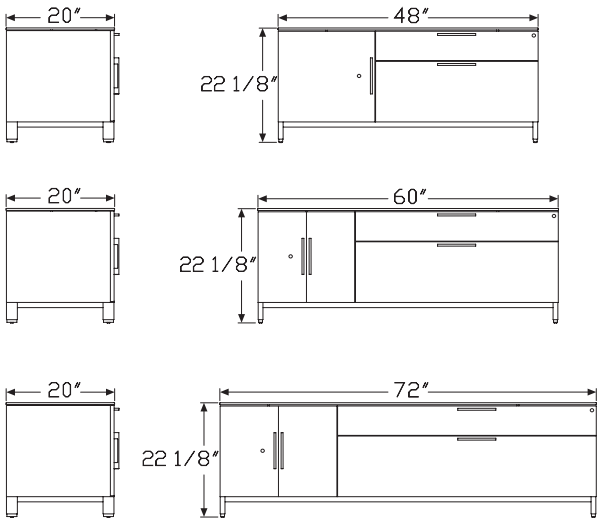

Powered Metal Low Credenza, Doors with Drawers *continued*

Specification Information

Step 1.

FMP74 A

Step 2. Pull Type

A. arc pull A
K. bar pull A

Step 3. Width

48 48″ wide A
60 60″ wide A
72 72″ wide A

Step 4. Depth

20 20″ deep A

Step 5. Base/Foot Height

4 4″-high foot A

Step 6. Configuration

For 48″ wide (48)

CE 30″ box/file left, single door right A
CF single door left, 30″ box/file right A

For 60″ wide (60)

CG 30″ box/file left, double doors right A
CH double doors left, 30″ box/file right A
CM 36″ box/file left, double doors right A
CN double doors left, 36″ box/file right A

For 72″ wide (72)

CM 36″ box/file left, double doors right A
CN double doors left, 36″ box/file right A
CS 42″ box/file left, double doors right A
CT double doors left, 42″ box/file right A

Step 7. Front Material

P painted metal front A
L laminate front A
W veneer front A

Step 8. Top

For painted metal front (P) or laminate front (L)

NT no top A
03 3/8″ laminate top A
04 3/8″ veneer top A

For veneer front (W)

NT no top A
04 3/8″ veneer top A

Step 9. Power Access Location

L left center access A
R right center access A

Step 10. Lock

L lock A

Prices for Steps 1-10.

	4CEPNTLL	4CEPNTRL	4CEP03LL	4CEP03RL	4CEP04LL	4CEP04RL
FMP74A. 48 20	$2806	2806	2923	2923	3158	3158

	4CELNTLL	4CELNTRL	4CEL03LL	4CEL03RL	4CEL04LL	4CEL04RL
FMP74A. 48 20	$2974	2974	3092	3092	3327	3327

	4CEWNTLL	4CEWNTRL	4CEW04LL	4CEW04RL	4CGPNTLL	4CGPNTRL
FMP74A. 48 20	$3706	3706	4059	4059	—	—
60 20	—	—	—	—	$3261	3261

	4CGP03LL	4CGP03RL	4CGP04LL	4CGP04RL	4CGLNTLL	4CGLNTRL
FMP74A. 60 20	$3378	3378	3614	3614	3458	3458

	4CGL03LL	4CGL03RL	4CGL04LL	4CGL04RL	4CGWNTLL	4CGWNTRL
FMP74A. 60 20	$3575	3575	3810	3810	4477	4477

	4CGW04LL	4CGW04RL	4CFPNTLL	4CFPNTRL	4CFP03LL	4CFP03RL
FMP74A. 48 20	—	—	$2806	2806	2923	2923
60 20	$4830	4830	—	—	—	—

	4CFP04LL	4CFP04RL	4CFLNTLL	4CFLNTRL	4CFL03LL	4CFL03RL
FMP74A. 48 20	$3158	3158	2974	2974	3092	3092

	4CFL04LL	4CFL04RL	4CFWNTLL	4CFWNTRL	4CFW04LL	4CFW04RL
FMP74A. 48 20	$3327	3327	3706	3706	4059	4059

	4CHPNTLL	4CHPNTRL	4CHP03LL	4CHP03RL	4CHP04LL	4CHP04RL
FMP74A. 60 20	$3261	3261	3378	3378	3614	3614

Powered Metal Low Credenza, Doors with Drawers *continued*

	4CHLNTLL	4CHLNTRL	4CHL03LL	4CHL03RL	4CHL04LL	4CHL04RL
FMP74A. 60 20	$3458	3458	3575	3575	3810	3810

	4CHWNTLL	4CHWNTRL	4CHW04LL	4CHW04RL	4CMPNTLL	4CMPNTRL
FMP74A. 60 20	$4477	4477	4830	4830	3358	3358
72 20	—	—	—	—	$3511	3511

	4CMP03LL	4CMP03RL	4CMP04LL	4CMP04RL	4CMLNTLL	4CMLNTRL
FMP74A. 60 20	$3474	3474	3592	3592	3559	3559
72 20	$3629	3516	3864	3864	3724	3724

	4CML03LL	4CML03RL	4CML04LL	4CML04RL	4CMWNTLL	4CMWNTRL
FMP74A. 60 20	$3675	3675	3911	3911	4587	4613
72 20	$3841	3841	4077	4077	4835	4835

	4CMW04LL	4CMW04RL	4CSPNTLL	4CSPNTRL	4CSP03LL	4CSP03RL
FMP74A. 60 20	$4965	4965	—	—	—	—
72 20	$5187	5187	3648	3648	3765	3765

	4CSP04LL	4CSP04RL	4CSLNTLL	4CSLNTRL	4CSL03LL	4CSL03RL
FMP74A. 72 20	$4001	4001	3857	3857	3974	3974

	4CSL04LL	4CSL04RL	4CSWNTLL	4CSWNTRL	4CSW04LL	4CSW04RL
FMP74A. 72 20	$4210	4210	5026	5026	5379	5379

	4CNPNTLL	4CNPNTRL	4CNP03LL	4CNP03RL	4CNP04LL	4CNP04RL
FMP74A. 60 20	$3358	3358	3474	3474	3592	3592
72 20	$3511	3511	3629	3516	3864	3864

	4CNLNTLL	4CNLNTRL	4CNL03LL	4CNL03RL	4CNL04LL	4CNL04RL
FMP74A. 60 20	$3559	3559	3675	3675	3911	3911
72 20	$3724	3724	3841	3841	4077	4077

	4CNWNTLL	4CNWNTRL	4CNW04LL	4CNW04RL	4CTPNTLL	4CTPNTRL
FMP74A. 60 20	$4587	4613	4965	4965	—	—
72 20	$4835	4835	5187	5187	3648	3648

	4CTP03LL	4CTP03RL	4CTP04LL	4CTP04RL	4CTLNTLL	4CTLNTRL
FMP74A. 72 20	$3765	3765	4001	4001	3857	3857

	4CTL03LL	4CTL03RL	4CTL04LL	4CTL04RL	4CTWNTLL	4CTWNTRL
FMP74A. 72 20	$3974	3974	4210	4210	5026	5026

	4CTW04LL	4CTW04RL
FMP74A. 72 20	$5379	5379

	4CEPNTLL	4CEPNTRL	4CEP03LL	4CEP03RL	4CEP04LL	4CEP04RL
FMP74K. 48 20	$2806	2806	2923	3066	3158	3158

	4CELNTLL	4CELNTRL	4CEL03LL	4CEL03RL	4CEL04LL	4CEL04RL
FMP74K. 48 20	$2974	2974	3092	3092	3327	3327

	4CEWNTLL	4CEWNTRL	4CEW04LL	4CEW04RL	4CGPNTLL	4CGPNTRL
FMP74K. 48 20	$3706	3706	4059	4059	—	—
60 20	—	—	—	—	$3261	3261

	4CGP03LL	4CGP03RL	4CGP04LL	4CGP04RL	4CGLNTLL	4CGLNTRL
FMP74K. 60 20	$3378	3378	3614	3614	3458	3458

	4CGL03LL	4CGL03RL	4CGL04LL	4CGL04RL	4CGWNTLL	4CGWNTRL
FMP74K. 60 20	$3575	3575	3810	3810	4477	4477

	4CGW04LL	4CGW04RL	4CFPNTLL	4CFPNTRL	4CFP03LL	4CFP03RL
FMP74K. 48 20	—	—	$2806	2806	2923	2923
60 20	$4830	4830	—	—	—	—

	4CFP04LL	4CFP04RL	4CFLNTLL	4CFLNTRL	4CFL03LL	4CFL03RL
FMP74K. 48 20	$3158	3158	2974	2974	3092	3092

	4CFL04LL	4CFL04RL	4CFWNTLL	4CFWNTRL	4CFW04LL	4CFW04RL
FMP74K. 48 20	$3327	3327	3706	3706	4059	4059

	4CHPNTLL	4CHPNTRL	4CHP03LL	4CHP03RL	4CHP04LL	4CHP04RL
FMP74K. 60 20	$3261	3261	3378	3378	3614	3614

	4CHLNTLL	4CHLNTRL	4CHL03LL	4CHL03RL	4CHL04LL	4CHL04RL
FMP74K. 60 20	$3458	3458	3575	3575	3810	3810

	4CHWNTLL	4CHWNTRL	4CHW04LL	4CHW04RL	4CMPNTLL	4CMPNTRL
FMP74K. 60 20	$4477	4477	4830	4830	3358	3358
72 20	—	—	—	—	$3511	3511

	4CMP03LL	4CMP03RL	4CMP04LL	4CMP04RL	4CMLNTLL	4CMLNTRL
FMP74K. 60 20	$3474	3474	3592	3592	3559	3559
72 20	$3516	3629	3864	3864	3724	3724

	4CML03LL	4CML03RL	4CML04LL	4CML04RL	4CMWNTLL	4CMWNTRL
FMP74K. 60 20	$3675	3675	3911	3911	4587	4613
72 20	$3841	3841	4077	4077	4835	4835

	4CMW04LL	4CMW04RL	4CSPNTLL	4CSPNTRL	4CSP03LL	4CSP03RL
FMP74K. 60 20	$4965	4965	—	—	—	—
72 20	$5187	5187	3648	3648	3765	3765

Powered Metal Low Credenza, Doors with Drawers *continued*

	4CSP04LL	4CSP04RL	4CSLNTLL	4CSLNTRL	4CSL03LL	4CSL03RL
FMP74K. 72 20	$4001	4001	3857	3857	3974	3974

	4CSL04LL	4CSL04RL	4CSWNTLL	4CSWNTRL	4CSW04LL	4CSW04RL
FMP74K. 72 20	$4210	4210	5026	5026	5379	5379

	4CNPNTLL	4CNPNTRL	4CNP03LL	4CNP03RL	4CNP04LL	4CNP04RL
FMP74K. 60 20	$3358	3358	3474	3474	3592	3592
72 20	$3511	3511	3516	3629	3864	3864

	4CNLNTLL	4CNLNTRL	4CNL03LL	4CNL03RL	4CNL04LL	4CNL04RL
FMP74K. 60 20	$3559	3559	3675	3675	3911	3911
72 20	$3724	3724	3841	3841	4077	4077

	4CNWNTLL	4CNWNTRL	4CNW04LL	4CNW04RL	4CTPNTLL	4CTPNTRL
FMP74K. 60 20	$4587	4613	4965	4965	—	—
72 20	$4835	4835	5187	5187	3648	3648

	4CTP03LL	4CTP03RL	4CTP04LL	4CTP04RL	4CTLNTLL	4CTLNTRL
FMP74K. 72 20	$3765	3765	4001	4001	3857	3857

	4CTL03LL	4CTL03RL	4CTL04LL	4CTL04RL	4CTWNTLL	4CTWNTRL
FMP74K. 72 20	$3974	3974	4210	4210	5026	5026

	4CTW04LL	4CTW04RL
FMP74K. 72 20	$5379	5379

Step 11. Paint/Steel Type

SS	smooth paint on smooth steel A	+$0
XS	textured paint on smooth steel A	+$0

Step 12. Surface Finish

Metallic Paint

For smooth paint on smooth steel (SS)

CN	metallic champagne A	+$0
EH	metallic bronze A	+$0
MS	metallic silver A	+$0

Sand Texture Paint

For textured paint on smooth steel (XS)

91	white A	+$0
BK	black A	+$0
CL	cool grey neutral A	+$0
G1	graphite A	+$0
WN	warm grey neutral A	+$0
98	studio white A	+$0
8Q	folkstone grey A	+$0
WL	sandstone A	+$0

Step 13. Front Finish

Solid-Color Laminate

For laminate front (L)

8Q	folkstone grey A	+$0
91	white A	+$0
98	studio white	+$0
CL	cool grey neutral A	+$0
LU	soft white A	+$0
WL	sandstone A	+$0
WN	warm grey neutral A	+$0

Linen Laminate

For laminate front (L)

LBM	crisp linen	+$0
LBN	classic linen	+$0
LBP	casual linen	+$0

Mesh Laminate

For laminate front (L)

LBK	pewter mesh	+$0
LBL	steel mesh	+$0

Twill Laminate

For laminate front (L)

LBF	neutral twill	+$0
LBG	sarum twill	+$0
LBH	earthen twill	+$0
LBJ	graphite twill	+$0
LBQ	white twill	+$0

Powered Metal Low Credenza, Doors with Drawers *continued*

Wood-Grain Laminate

For laminate front (L)

HM	natural maple A	+$0
HP	light anigre A	+$0
LBA	clear on ash	+$0
LBR	phantom ecru	+$0
LBS	phantom cocoa	+$0
LBU	medium matte walnut	+$0
LBV	warm grey teak	+$0
LBB	oak on ash	+$0
LBC	walnut on ash	+$0
LBD	dark brown walnut	+$0
LBE	medium red walnut	+$0
76	light brown walnut A	+$0
HX	aged cherry A	+$0
HY	walnut on cherry A	+$0

Wood Veneer

For veneer front (W)

2U	light brown walnut A	+$0
40	dark brown walnut A	+$0
ED	aged cherry A	+$0
EK	medium red walnut A	+$0
EW	medium matte walnut A	+$0
ET	clear on ash A	+$0
EV	walnut on ash A	+$0
UL	natural maple A	+$0
UX	walnut on cherry A	+$0

Step 14. Top Finish

Solid-Color Laminate

For 3/8" laminate top (03)

8Q	folkstone grey A	+$0
91	white A	+$0
98	studio white	+$0
CL	cool grey neutral A	+$0
LU	soft white A	+$0
WL	sandstone A	+$0
WN	warm grey neutral A	+$0

Linen Laminate

For 3/8" laminate top (03)

LBM	crisp linen	+$0
LBN	classic linen	+$0
LBP	casual linen	+$0

Mesh Laminate

For 3/8" laminate top (03)

LBK	pewter mesh	+$0
LBL	steel mesh	+$0

Twill Laminate

For 3/8" laminate top (03)

LBF	neutral twill	+$0
LBG	sarum twill	+$0
LBH	earthen twill	+$0
LBJ	graphite twill	+$0
LBQ	white twill	+$0

Wood-Grain Laminate

For 3/8" laminate top (03)

HM	natural maple A	+$0
HP	light anigre A	+$0
LBA	clear on ash	+$0
LBR	phantom ecru	+$0
LBS	phantom cocoa	+$0
LBU	medium matte walnut	+$0
LBV	warm grey teak	+$0
LBB	oak on ash	+$0
LBC	walnut on ash	+$0
LBD	dark brown walnut	+$0
LBE	medium red walnut	+$0
76	light brown walnut A	+$0
HX	aged cherry A	+$0
HY	walnut on cherry A	+$0

Wood Veneer

For 3/8" veneer top (04)

2U	light brown walnut A	+$0
40	dark brown walnut A	+$0
ED	aged cherry A	+$0
EK	medium red walnut A	+$0
EW	medium matte walnut A	+$0
ET	clear on ash A	+$0
EV	walnut on ash A	+$0
UL	natural maple A	+$0
UX	walnut on cherry A	+$0

Step 15. Base Finish		
Metallic Paint		
CN	metallic champagne A	+$0
EH	metallic bronze A	+$0
MS	metallic silver A	+$0
Sand Texture Paint		
91	white A	+$0
BK	black A	+$0
CL	cool grey neutral A	+$0
G1	graphite A	+$0
WN	warm grey neutral A	+$0
8Q	folkstone grey A	+$0
98	studio white A	+$0
WL	sandstone A	+$0

Step 16. Pull Finish		
For arc pull (A.)		
NH	brushed nickel A	+$0
NK	black nickel A	+$0
Metallic Paint *For bar pull (K.)*		
CN	metallic champagne A	+$0
MS	metallic silver A	+$0
Sand Texture Paint *For bar pull (K.)*		
79	green apple A	+$15
BK	black A	+$0
MY3	yellow oxide A	+$15
RO	red A	+$15
TRQ	turquoise A	+$15
Smooth Paint *For bar pull (K.)*		
8Q	folkstone grey A	+$0
91	white A	+$0
98	studio white A	+$0
G1	graphite A	+$0
WL	sandstone A	+$0

Step 17. Counterweight		
NO	no counterweight A	+$0
CB	counterweight A	+$115

Step 18. Lock Option		
KA	keyed alike A	-$10
KC	keyed differently, chrome A	+$0
KD	keyed differently, black A	+$0

Support Bracket, Low Credenza-to-Frame

FT292.

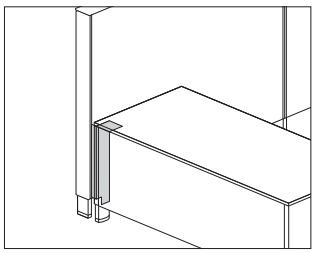

Product Information

Description

This bracket attaches between a Canvas wood or metal credenza and a frame. It allows the credenza to attach parallel or perpendicular to the frame, providing support to a frame run in place of a return wall or work surface support.

Notes

Bracket attaches credenza with no gap or with a 1″ gap from the front of the frame to allow room for cords and cables.

Support bracket attaches to low credenza with 4″ foot and thin top only.

Support bracket also attaches to back of a 60″ wide or wider low credenza where 2 units are joined.

Support bracket orientation (left or right) is determined by the frame orientation as you are facing the frame. Credenza can be attached parallel or perpendicular to a frame. Bracket attaches to the back left or back right of the low credenza.

Dimensions

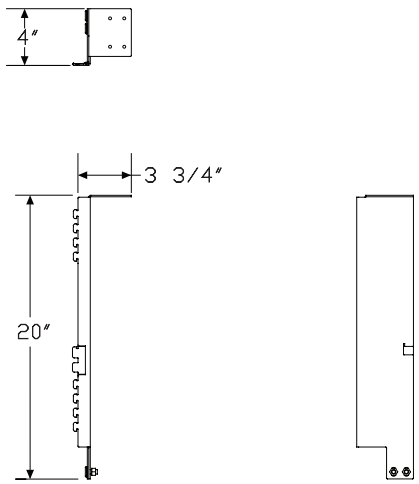

Specification Information

Step 1.

FT292.

Step 2. Storage Type

M	for use with metal low credenza with 4″ high foot
C	for use with wood low credenza with 4″ high foot A

Step 3. Frame Attachment Location

L	left end of frame
R	right end of frame

Step 4. Storage Attachment Position

N	no gap, for storage tight to wall
G	1″ gap, for cord drop

Prices for Steps 1-4.

			N	G
FT292.	**M**	**L**	$135	135
		R	$135	135
	C	**L**	$135	135
		R	$135	135

Step 5. Surface Finish

Sand Texture Paint

8Q	folkstone grey	+$0
91	white	+$0
98	studio white	+$0
BK	black	+$0
CL	cool grey neutral	+$0
G1	graphite	+$0
WL	sandstone	+$0
WN	warm grey neutral	+$0

Metallic Paint

CN	metallic champagne	+$0
EH	metallic bronze	+$0
MS	metallic silver	+$0

Powered Storage Ganging Bracket Kit PS900

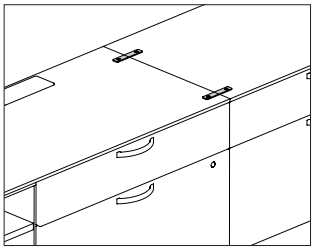

Product Information

Description

This kit has 2 brackets that attach to the case under the tops of 2 adjacent surfaces, ganging them together to provide stability and allowing electrical components to be routed from one case to another. Finish is black.

Notes

Power that is being routed from one case to another requires the cases be ganged together.

Single cases require counterweight to be specified.

Specification Information

Step 1.

PS900	A	$33

Powered Storage Cable Cover FPS910

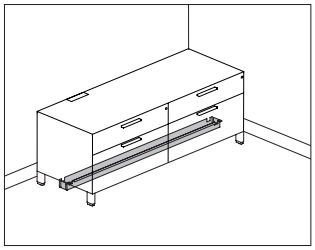

Product Information

Description

This cable cover attaches to a metal or wood Canvas Office Landscape® powered low credenza, and is available in 3 configurations: center, full-span, and side placement. It is used in conjunction with Connect™ components to comply with UL1286 listing. Finish is black.

Notes

Order the following products separately:

- Canvas powered metal low credenza (FMP72, FMP73, FMP74)
- Canvas powered wood low credenza (FFD72, FFD73, FFD74)
- Connect - S310 electrical unit with connect modular connection (Y1329.)
- Connect - power entry, 4-circuit (Y1351.)
- Connect - junction block to junction block jumper, 4-circuit (Y1353.)
- Connect - H-block connector, 4-circuit (Y1354.H)
- Powered storage distributor cover (FPS911.)

Dimensions

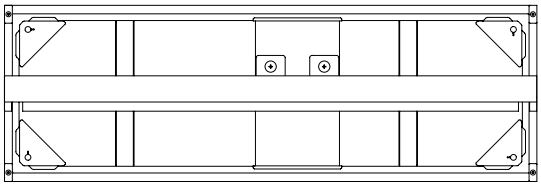

Full

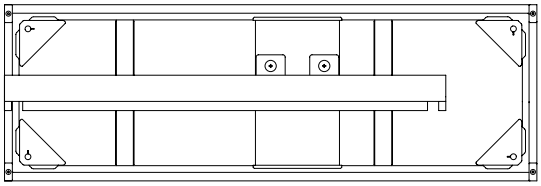

Side

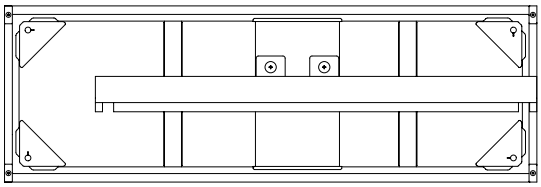

Side

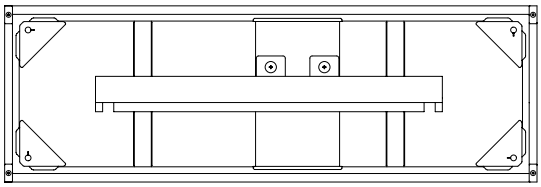

Center

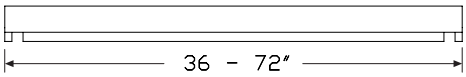

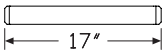

Cross bars for use with metal credenza only

Powered Storage Cable Cover

continued

Specification Information

Step 1.

FPS910. A

Step 2. Material

F for use with wood powered low credenza A

M for use with metal powered low credenza A

Step 3. Case Width

48 48″ wide A

60 60″ wide A

66 66″ wide A

72 72″ wide A

Step 4. Configuration

C center A

F full A

S side A

Prices for Steps 1-4.

			C	F	S
FPS910.	**F**	**48**	$101	101	101
		60	$125	125	125
		66	$125	125	125
		72	$122	122	125
	M	**48**	$213	213	213
		60	$236	236	236
		66	$236	236	236
		72	$236	236	236

Powered Storage Distributor Cover FPS911

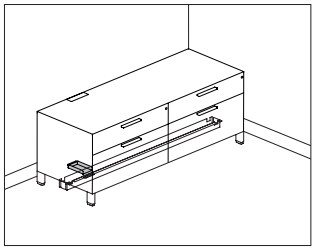

Product Information

Description

This distributor cover attaches to a metal or wood Canvas Office Landscape® powered low credenza. It is used in conjunction with a powered storage cable cover and Connect™ components to comply with UL1286 listing. Finish is black.

Notes

Order the following products separately:

- Canvas powered metal low credenza (FMP72, FMP73, FMP74)
- Canvas powered wood low credenza (FFD72, FFD73, FFD74)
- Connect - S310 electrical unit with connect modular connection (Y1329.)
- Connect - power entry, 4-circuit (Y1351.)
- Connect - junction block to junction block jumper, 4-circuit (Y1353.)
- Connect - H-block connector, 4-circuit (Y1354.H)
- Powered storage cable cover (FPS910.)

Dimensions

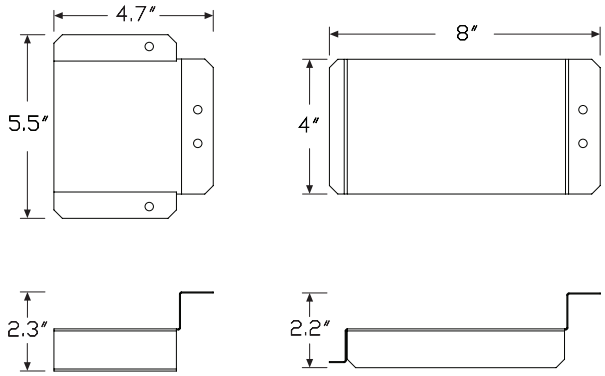

Specification Information

Step 1.

FPS911. A

Step 2. Material

F	for use with wood powered low credenza A
M	for use with metal powered low credenza A

Prices for Steps 1-2.

FPS911.	**F**	$53
	M	$53

Connect™ - S310 Electrical Unit with Connect Modular Connection Y1329.

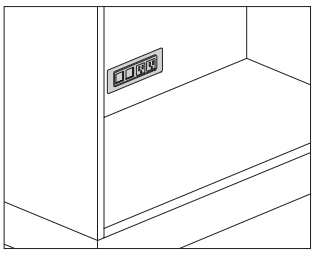

Product Information

Description

This electrical distributor provides power to a lateral file, low credenza, or storage case with a Connect™ 4-circuit modular connector. It can be top surface mounted flush or vertically mounted in the false back of a cabinet. A voice/data adapter kit is included, allowing the data openings to accept various manufacturers' couplers and jacks. Attachment hardware is included. Product is UL listed.

Notes

Field cutting of surface may be required. Information on surface cutout size is included on instruction sheet.

Silver option (0I) and white option (0J) have painted metal trim with white plastic simplex/data interiors. Black option (0H) has black painted trim with black plastic simplex/data interior.

Modular electrical connectors can only connect to Connect 4-circuit modular power system.

Order the following products separately:

- Canvas powered metal low credenza (FMP72A., FMP72K., FMP73A., FMP73K., FMP74A., FMP74K.)
- Canvas powered wood low credenza (FFD72A., FFD72K., FFD73A., FFD73K., FFD74A., FFD74K.)
- Meridian powered storage case (PSC-, PS6-, PSAM-, PSAV-, PSKM-, PSKV-)
- Meridian powered storage lateral file (PS26-, PS2AM, PS2AV, PS2KM, PS2KV)
- Connect - power entry, 4-circuit (Y1351.)
- Connect - junction block to junction block jumper, 4-circuit (Y1353.)
- Connect - block connector, 4-circuit (Y1354.)
- Other Connect 4-circuit modular power components as required

For Canvas powered storage, order Connect - conduit clamp (Y1339.) separately.

Dimensions

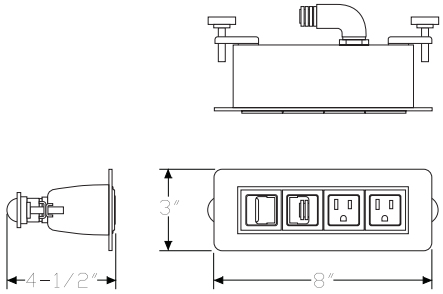

Specification Information

Step 1.

Y1329.

Step 2. Configuration

3	2 simplex receptacles, 2 data openings
8	3 simplex receptacles, 1 data opening

Step 3. Power Type

E	4 circuit circuit 1
F	4 circuit circuit 2
G	4 circuit circuit 3
H	4 circuit circuit 4

Step 4. Cord/Conduit Length

02	2' conduit
03	3' conduit
04	4' conduit
06	6' conduit
10	10' conduit

Prices for Steps 1-4.

			02	03	04	06	10
Y1329.	**3**	**E**	$344	354	363	386	427
		F	$344	354	363	386	427
		G	$344	354	363	386	427
		H	$344	354	363	386	427
	8	**E**	$360	369	383	401	443
		F	$360	369	383	401	443
		G	$360	369	383	401	443
		H	$360	369	383	401	443

Step 5. Finish

0H	black	+$0
0I	silver	+$0
0J	white	+$0

Connect™-Power Entry, 4-Circuit Y1351.

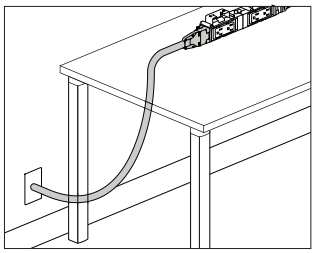

Product Information

Description

This power entry connects a building's electrical from a wall, floor, or column to the end of a 4-circuit dual junction block power kit or junction block and distributes up to 4 20-amp circuits. UL 183 listed, CUL Certified.

Notes

Connect™ modular power products are not compatible with electrical components used in Herman Miller systems or desking product lines.

Power entry can be field cut to the appropriate length.

For San Francisco, specify 3/8" flex metallic conduit option (C).

Finish color on liquid tight conduit is black. Finish color on metallic conduit is silver.

A licensed electrician must wire the power entry to the building's electrical system.

Dimensions

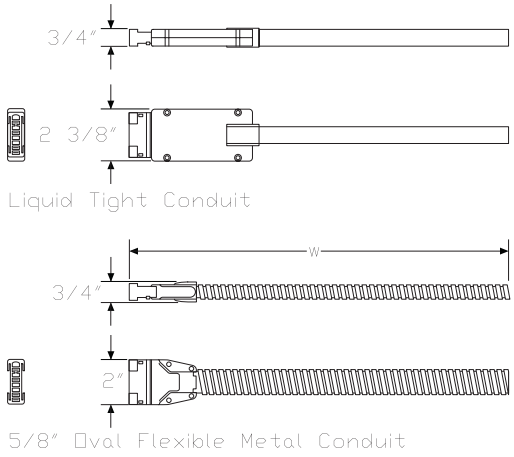

Specification Information

Step 1.

Y1351.

Step 2. Length

06	6' long
12	12' long
18	18' long
24	24' long

Step 3. Conduit Type

L	liquid tight conduit
C	3/8" flex metallic conduit

Prices for Steps 1-3.

		L	C
Y1351.	**06**	$158	158
	12	$226	226
	18	$296	296
	24	$380	380

Connect™-Junction Block to Junction Block Jumper, 4-Circuit Y1353.

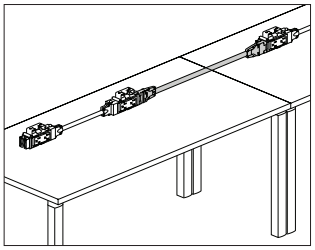

Product Information

Description

This power jumper distributes up to 4 20-amp circuits between 2 power kits or junction blocks and is available as adjustable or non-adjustable. The adjustable jumper allows 1 end of the jumper to extend an additional 3" when connecting to components under an adjacent desk or table. UL 183 listed, CUL Certified.

Notes

Connect™ modular power products are not compatible with electrical components used in Herman Miller systems or desking product lines.

When routing power to an adjacent desk or table, surfaces must be ganged together. Order ganging bracket kit (Y1338.) separately.

When connecting dual junction block power kits (Y1350.) between adjacent surfaces in a linear run, specify 24"-wide jumper.

When connecting dual junction block power kits (Y1350.) at the outside corner of 2 24"-deep surfaces at 90°, specify 42"-wide jumper.

When connecting dual junction block power kits (Y1350.) at the outside corner of 2 30"-deep surfaces at 90°, specify 48"-wide jumper.

When connecting dual junction block power kits (Y1350.) at the outside corner of 1 30"-deep and 1 24"-deep surface, specify 48"-wide jumper.

When connecting dual junction block power kits (Y1350.) at the inside corner of 2 24"- or 30"-deep surfaces, specify 30"-wide jumper.

Finish on 5/8" oval metallic conduit is silver.

Order the following products separately:

- Conduit clamps (Y1339.)
- Dual junction block power kit, 4-circuit (Y1350.) or junction block, 4-circuit (Y1358.)
- Duplex receptacle, 4-circuit (Y1355.) - for junction block, 4-circuit
- Junction block bracket, 4-circuit (Y1357.) - for junction block, 4-circuit
- Power entry, 4-circuit (Y1351.)

Dimensions

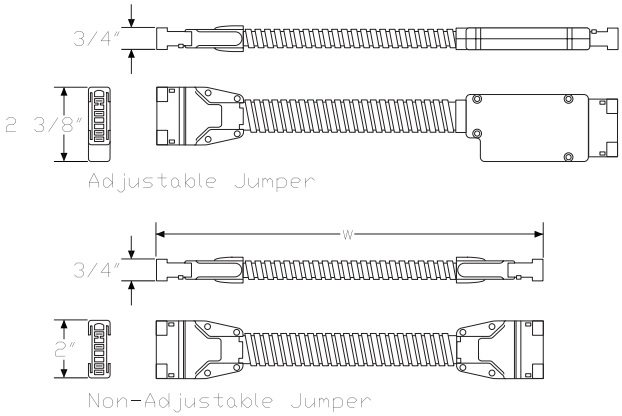

Connect™-Junction Block to Junction Block Jumper, 4-Circuit

continued

Specification Information

Step 1.

Y1353.

Step 2. Width

12	12″ wide
18	18″ wide
24	24″ wide
30	30″ wide
36	36″ wide
42	42″ wide
48	48″ wide
54	54″ wide
60	60″ wide
66	66″ wide
72	72″ wide
78	78″ wide
84	84″ wide
90	90″ wide
108	108″ wide
120	120″ wide
132	132″ wide
144	144″ wide

Step 3. Type

A	adjustable jumper
N	nonadjustable jumper

Prices for Steps 1-3.

		A	N
Y1353.	**12**	$80	80
	18	$85	85
	24	$92	92
	30	$98	98
	36	$103	103
	42	$108	108
	48	$115	115
	54	$121	121
	60	$127	127
	66	$132	132
	72	$137	137
	78	$144	144
	84	$149	149
	90	$156	156
	108	$173	173
	120	$183	183
	132	$196	196
	144	$208	208

Connect™-Block Connector, 4-Circuit Y1354.

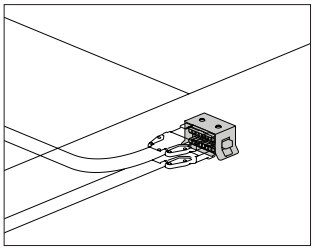

Product Information

Description

This block connects components together to distribute power. The H-block connector connects jumpers together at 2-, 3-, and 4-way connection points, or distributes power from a power entry to multiple components. The receptacle-to-receptacle connectors connect 2 junction blocks together. Finish is black. Attachment hardware included. UL 183 listed, CUL Certified.

Notes

Connect™ modular power products are not compatible with electrical components used in Herman Miller systems or desking product lines. When routing power to an adjacent desk or table, surfaces must be ganged together. Order ganging bracket kit (Y1338.) separately.

Dimensions

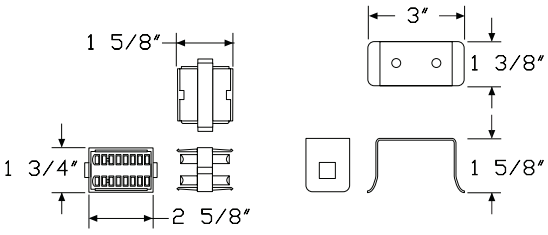

H-Block H-Block Bracket

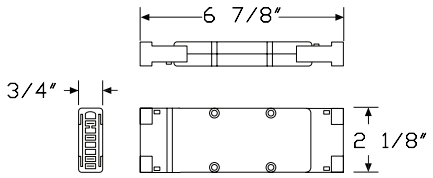

Receptacle-to-Receptacle Block Connector

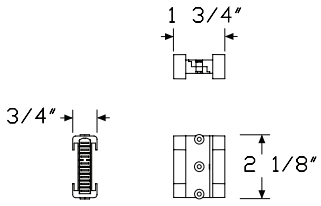

Short Receptacle-to-Receptacle Block Connector

Specification Information

Step 1.

Y1354.

Step 2. Connector Type

H	H-block connector
S	short receptacle-to-receptacle block connector A
R	receptacle-to-receptacle block connector

Prices for Steps 1-2.

Y1354.	**H**	$44
	S	$54
	R	$56

Credenza Top for Metal Credenza FM890.

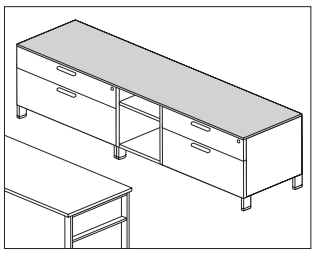

Product Information

Description

This 3/8"-high credenza top can be used to cover a single credenza or 2 credenzas that are ganged side-by-side. Attachment hardware included.

Notes

For additional product options, see Vary Easy Program® in Appendices.

Dimensions

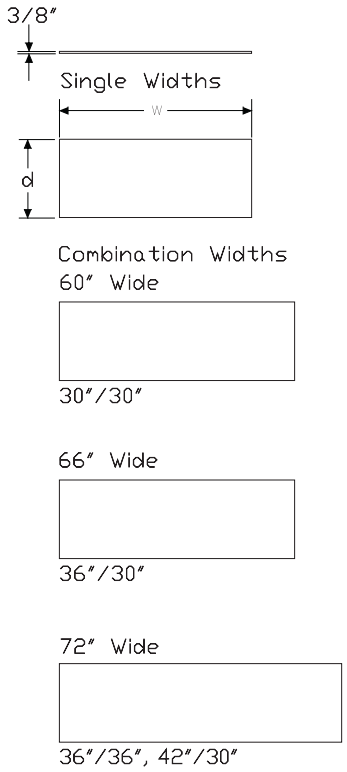

Specification Information

Step 1.

FM890.20 A

Step 2. Width

30	30" wide	A
36	36" wide	A
42	42" wide	A
48	48" wide	A
60	60" wide	A
66	66" wide	A
72	72" wide	A

Step 3. Top Material

03	3/8" laminate top	A
04	3/8" veneer top	A

Prices for Steps 1-3.

		03	04
FM890.20	**30**	$283	674
	36	$322	758
	42	$366	804
	48	$390	859
	60	$477	983
	66	$524	1067
	72	$546	1105

Step 4. Top Finish

Solid-Color Laminate

For 3/8" laminate top (03)

8Q	folkstone grey	A	+$0
91	white	A	+$0
98	studio white		+$0
CL	cool grey neutral	A	+$0
LU	soft white	A	+$0
WL	sandstone	A	+$0
WN	warm grey neutral	A	+$0

Linen Laminate

For 3/8" laminate top (03)

LBM	crisp linen	+$0
LBN	classic linen	+$0
LBP	casual linen	+$0

Credenza Top for Metal Credenza

continued

Mesh Laminate		
For 3/8" laminate top (03)		
LBK	pewter mesh	+$0
LBL	steel mesh	+$0

Twill Laminate		
For 3/8" laminate top (03)		
LBF	neutral twill	+$0
LBG	sarum twill	+$0
LBH	earthen twill	+$0
LBJ	graphite twill	+$0
LBQ	white twill	+$0

Wood-Grain Laminate		
For 3/8" laminate top (03)		
HM	natural maple A	+$0
HP	light anigre A	+$0
LBA	clear on ash	+$0
LBR	phantom ecru	+$0
LBS	phantom cocoa	+$0
LBU	medium matte walnut	+$0
LBV	warm grey teak	+$0
LBB	oak on ash	+$0
LBC	walnut on ash	+$0
LBD	dark brown walnut	+$0
LBE	medium red walnut	+$0
76	light brown walnut A	+$0
HX	aged cherry A	+$0
HY	walnut on cherry A	+$0

Wood Veneer		
For 3/8" veneer top (04)		
2U	light brown walnut A	+$0
40	dark brown walnut A	+$0
ED	aged cherry A	+$0
EK	medium red walnut A	+$0
EW	medium matte walnut A	+$0
ET	clear on ash A	+$0
EU	oak on ash A	+$0
EV	walnut on ash A	+$0
UL	natural maple A	+$0
UX	walnut on cherry A	+$0

Credenza Cushion Top FF891.

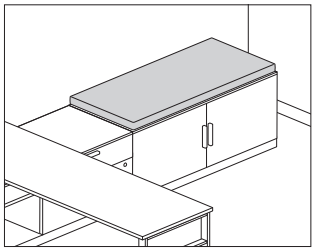

Product Information

Description

This cushion attaches to the top of a metal or wood credenza to provide temporary guest seating. Attachment hardware included.

Notes

Cushion accepts Customer's Own Material (COM). Yardage is estimated for nondirectional, 54"-wide fabrics. Order 1 yard of fabric per cushion. For odd number of cushions, round up to next full yard. For information on multiple quantities or directional fabrics, contact COM Department. See Order Information in Appendices.

Dimensions

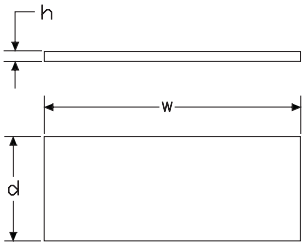

Specification Information

Step 1.

FF891. A

Step 2. Height

01 1" high A
02 2" high A

Step 3. Depth

20 20" deep A

Step 4. Width

24 24" wide A
30 30" wide A
36 36" wide A
42 42" wide A
48 48" wide A

Prices for Steps 1-4.

		24	30	36	42	48
FF891.	**01 20**	$247	265	284	295	310
	02 20	$296	322	349	370	389

Step 5. Fabric

See application chart and textiles list for fabric usage and numbers. First 2 digits of number indicate fabric line; remaining digit(s) indicate fabric color.

Price Category 1	+$0
Price Category 2	+$102
Price Category 3	+$123
Price Category 4	+$151
Price Category 7 A	+$206
Price Category 9	+$1425
Price Category E	+$150
Price Category G	+$251
Price Category H	+$305

Metal Credenza Shelf FM892.

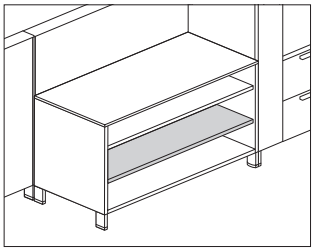

Product Information

Description

This metal shelf fits into a metal credenza to provide additional shelf storage. Shelf attachment hardware included.

Dimensions

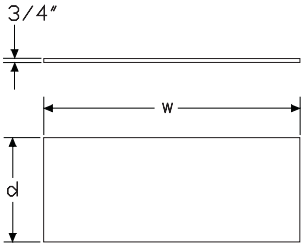

Specification Information

Step 1.

FM892. A

Step 2. Width

18	18" wide A
24	24" wide A
30	30" wide A
36	36" wide A
42	42" wide A

Step 3. Depth

20	20" deep A

Prices for Steps 1-3.

		20
FM892.	**18**	$46
	24	$60
	30	$71
	36	$85
	42	$96

Step 4. Paint/Steel Type

SS	smooth paint on smooth steel A	+$0
XS	textured paint on smooth steel A	+$0

Step 5. Surface Finish

Metallic Paint

For smooth paint on smooth steel (SS)

CN	metallic champagne A	+$0
EH	metallic bronze A	+$0
MS	metallic silver A	+$0

Sand Texture Paint

For textured paint on smooth steel (XS)

98	studio white A	+$0
8Q	folkstone grey A	+$0
BK	black A	+$0
WL	sandstone A	+$0

Bright Sand Texture Paint

For textured paint on smooth steel (XS)

91	white A	+$0
CL	cool grey neutral A	+$0
G1	graphite A	+$0
WN	warm grey neutral A	+$0

Pari Screen, Storage Attached FV360.

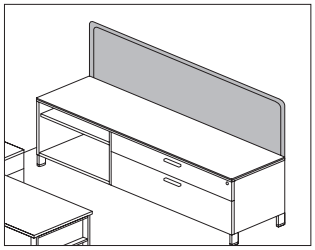

Product Information

Description

This tackable fabric screen attaches to a Canvas low credenza using the thin top and provides boundary with a tackable surface. Attachment hardware included.

Notes

Order credenza thin top separately:

- Credenza top for wood credenza (FF889.)
- Credenza top for metal credenza (FM889.)

Predrilled holes near back edge of credenza thin top allow for bayonets to extend up to support the screen.

Works with standard and powered Canvas credenzas.

Screen accepts Customer's Own Material (COM). Yardage is estimated for nondirectional 54"-wide fabrics.

For vertical fabric direction (T):

Height—Yardage

24—0.95
30—1.14
36—1.32

For horizontal fabric direction (R), for 42" high:

Width—Yardage

24—0.95
30—1.14
36—1.32
42—1.51
48—1.71
60—2.07
66—2.27
72—2.46

For horizontal fabric direction (R), for 46" high and 53" high:

Width—Yardage

24—1.90
30—2.27
36—2.66
42—3.02
48—3.41
60—4.17
66—4.54
72—4.92

For information on multiple quantities or directional fabrics, contact COM Department. See Order Information in Appendices.

Dimensions

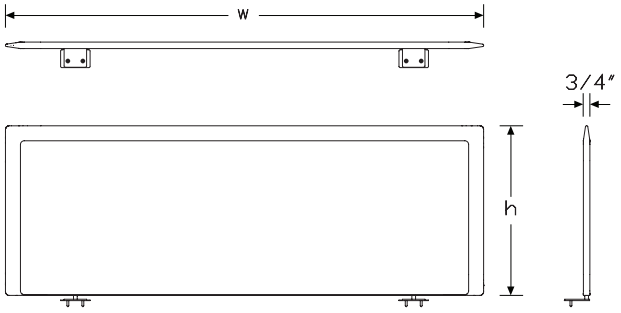

Pari Screen, Storage Attached

continued

Specification Information

Step 1.

FV360. A

Step 2. Attachment

CS Canvas credenza attached, single A

CB Canvas credenza attached, back to back A

Step 3. Height

42 42" high A

46 46" high A

53 53" high A

Step 4. Width

30 30" wide A

36 36" wide A

42 42" wide A

48 48" wide A

60 60" wide A

66 66" wide A

72 72" wide A

Step 5. Surface Material

For 30" wide (30), 36" wide (36), 42" wide (42), or 48" wide (48)

R tackable fabric, horizontal A

T tackable fabric A

For 60" wide (60), 66" wide (66), or 72" wide (72)

R tackable fabric, horizontal A

Prices for Steps 1-5.

		30R	30T	36R	36T	42R	42T
FV360. CS	**42**	$743	743	773	773	819	819
	46	$773	773	864	864	909	909
	53	$909	909	955	955	1106	1106
CB	**42**	$743	743	773	773	819	819
	46	$773	773	864	864	909	909
	53	$909	909	955	955	1106	1106

		48R	48T	60R	66R	72R
FV360. CS	**42**	$955	955	1091	1111	1137
	46	$1000	1000	1137	1202	1228
	53	$1182	1182	1319	1384	1409
CB	**42**	$955	955	1091	1111	1137
	46	$1000	1000	1137	1202	1228
	53	$1182	1182	1319	1384	1409

Step 6. Fabric

	30	36	42	48	60
Price Category 1	+$0	0	0	0	0
Price Category 2	+$38	38	38	31	31
Price Category 3	+$90	90	90	74	74
Price Category 4	+$156	156	156	127	127

	66	72
Price Category 1	+$0	0
Price Category 2	+$38	38
Price Category 3	+$90	90
Price Category 4	+$156	156

Front-to-Back Filing Rail FM920.

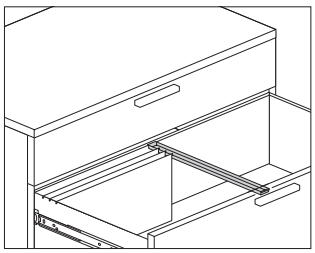

Product Information

Description

This filing rail holds letter-size files for front-to-back filing. The 18"-deep rail is used in a metal low credenza. The 20"-deep rail is used in a metal lateral file. Finish is black umber.

Dimensions

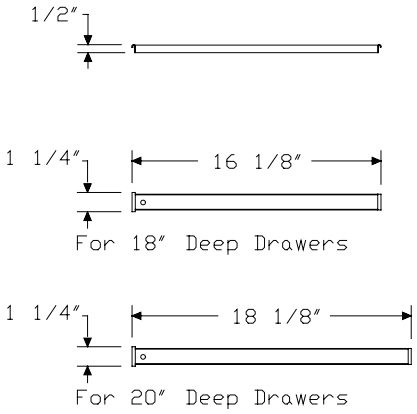

Specification Information

Step 1.

FM920.

Step 2. Width

00 for 30"- or 42"-wide drawers

36 for 36"-wide drawers

Step 3. Depth

18 for 18"-deep low credenza file drawer

20 for 20"-deep 2-high lateral file drawer

Prices for Steps 1-3.

		18	**20**
FM920.	**00**	$34	34
	36	$34	34

Side-to-Side Filing Rail FM921.

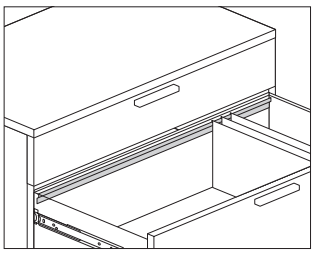

Product Information

Description

This filing rail holds letter- or legal-sized hanging folder for side-to-side filing in a metal low credenza or lateral file. Finish is black umber.

Dimensions

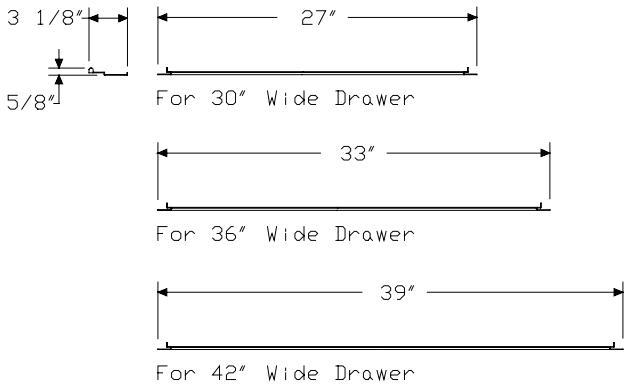

Specification Information

Step 1.

FM921.

Step 2. Quantity

1	1 filing rail
2	2 filing rails

Step 3. Width

30	for 30″-wide drawers
36	for 36″-wide drawers
42	for 42″-wide drawers

Prices for Steps 1-3.

		30	**36**	**42**
FM921.	**1**	$25	25	25
	2	$48	48	48

Movable Divider

FM922.
FM929.

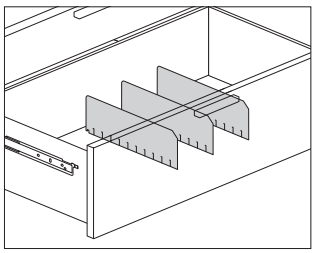

Product Information

Description

This adjustable metal divider fits into slots of a metal low credenza or lateral file drawer. The 18"-deep divider is used in a metal low credenza. The 20"-deep divider is used in a metal lateral file. Finish is black umber.

Dimensions

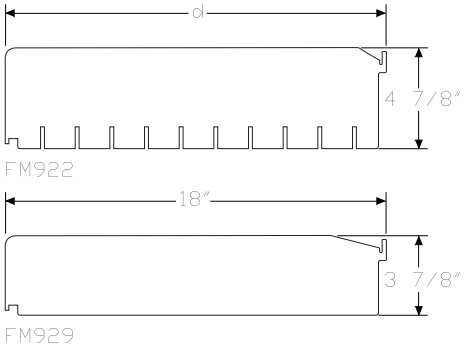

Specification Information

Step 1.

FM92

Step 2. Type

2. file drawer divider

9. credenza box drawer divider

Step 3. Quantity

1 1 divider

3 3 dividers

Step 4. Depth

For file drawer divider (2.)

18 for 18"-deep low credenza

20 for 20"-deep 2-high lateral file

For credenza box drawer divider (9.)

18 for 18"-deep low credenza

Prices for Steps 1-4.

		18	20
FM922.	**1**	$35	36
	3	$86	89
FM929.	**1**	$35	—
	3	$86	—

File Drawer Organizer FM923.

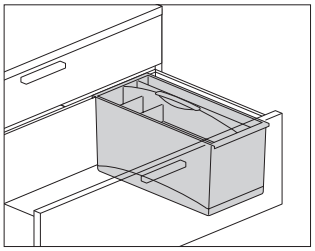

Product Information

Description

This 2-piece plastic organizer fits into any file drawer configured for letter-size filing. It has a removable top tray with sections for storing small items, and a bottom bin that can hold larger items or be divided into 3 sections; 2 vertical dividers included. Finish is black umber.

Dimensions

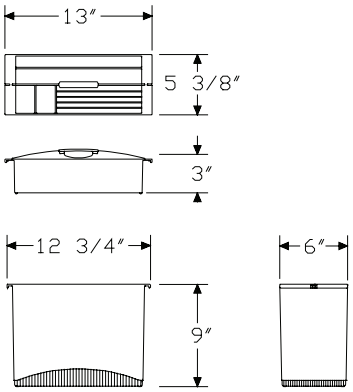

Specification Information

Step 1.

FM923.	$86

Metal Vertical Tower, Thin Top

FM90A.
FM90K.

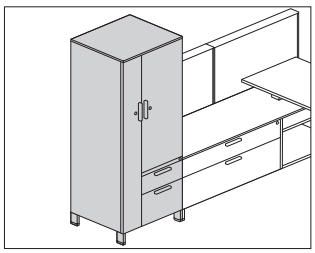

Product Information

Description

This freestanding tower has a 3/8"-high laminate or veneer top and a painted steel case with a painted, laminate, or veneer front. It has a wardrobe on 1 side and a storage case over pedestal drawers on the other side. The tower is available with 4"-high architectural feet or a 2 1/4"-high base with leveling glides. Architectural feet and glides have 1" adjustment range.

The wardrobe includes a coat rod.

The storage case has 1 or 2 adjustable shelves that adjust in 1 1/4" increments.

The pedestal has 1 lock that secures all drawers. It includes a positive interlock system that permits only 1 drawer to open at a time. Drawers have full-extension ball-bearing slides. File drawers accommodate front-to-back filing of letter-size hanging files.

Notes

For additional product options, see Vary Easy Program® in Appendices.

Arc pull option (A.) conforms to guidelines of Americans with Disabilities Act (ADA).

Grain direction is vertical on veneer and wood-grain laminate fronts.

Dimensional illustrations do not include all possible configurations.

For keyed-alike locks, see Keyed-Alike Information in Appendices.

Dimensions

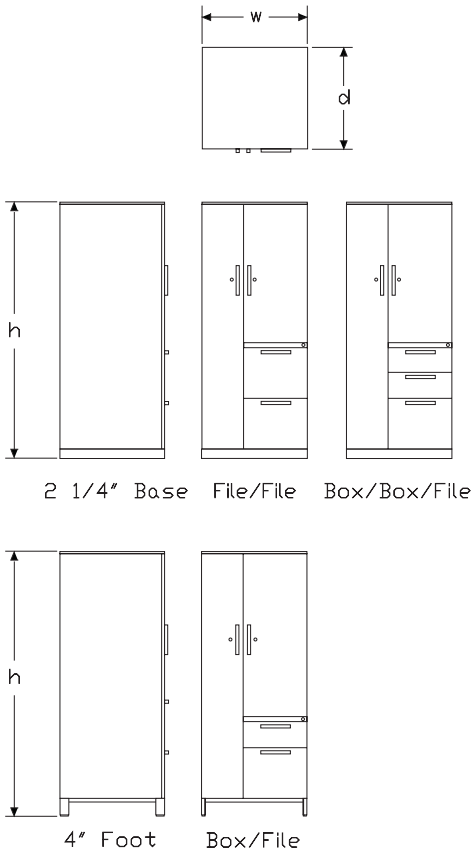

Metal Vertical Tower, Thin Top

continued

Specification Information

Step 1.

FM90 A

Step 2. Pull Type

A. arc pull A
K. bar pull A

Step 3. Height

4 42″ high A
5 46″ high A
6 57″ high A
7 68″ high A

Step 4. Width

24 24″ wide A

Step 5. Depth

24 24″ deep A

Step 6. Base/Foot Height

2 2¹/₄″-high base A
4 4″-high foot A

Step 7. Configuration

For 2¹/₄″-high base (2)

BR file/file, wardrobe right A
BL file/file, wardrobe left A
CR box/box/file, wardrobe right A
CL box/box/file, wardrobe left A

For 4″-high foot (4)

HR box/file, wardrobe right A
HL box/file, wardrobe left A

Step 8. Front Material

P painted metal front A
L laminate front A
W veneer front A

Step 9. Top

3 ³/₈″ laminate top A
4 ³/₈″ veneer top A

Step 10. Lock

L lock A

Prices for Steps 1-10.

			242BRP3L	242BRP4L	242BRL3L	242BRL4L	242BRW3L	242BRW4L
FM90A.	**4**	**24**	$2920	3165	3074	3317	3588	3832
	5	**24**	$3037	3280	3352	3440	3709	3954
	6	**24**	$3306	3397	3317	3562	3832	4076
	7	**24**	$3427	3514	3607	3685	3954	4403

			242BLP3L	242BLP4L	242BLL3L	242BLL4L	242BLW3L	242BLW4L
FM90A.	**4**	**24**	$2920	3165	3074	3317	3588	3832
	5	**24**	$3037	3280	3352	3440	3709	3954
	6	**24**	$3306	3397	3317	3562	3832	4076
	7	**24**	$3427	3514	3607	3685	3954	4403

			242CRP3L	242CRP4L	242CRL3L	242CRL4L	242CRW3L	242CRW4L
FM90A.	**4**	**24**	$2981	3226	3133	3378	3648	3892
	5	**24**	$3096	3340	3257	3501	3769	4014
	6	**24**	$3126	3226	3415	3501	3892	4135
	7	**24**	$3329	3574	3672	3745	4014	4465

			242CLP3L	242CLP4L	242CLL3L	242CLL4L	242CLW3L	242CLW4L
FM90A.	**4**	**24**	$2981	3226	3133	3378	3648	3892
	5	**24**	$3247	3340	3257	3501	3769	4014
	6	**24**	$3126	3226	3415	3501	3892	4135
	7	**24**	$3491	3574	3672	3745	4014	4465

			244HRP3L	244HRP4L	244HRL3L	244HRL4L	244HRW3L	244HRW4L
FM90A.	**4**	**24**	$3062	3165	3074	3317	3588	3832
	5	**24**	$3184	3280	3197	3440	3709	3954
	6	**24**	$3306	3397	3317	3562	3832	4076
	7	**24**	$3427	3514	3440	3685	3954	4199

			244HLP3L	244HLP4L	244HLL3L	244HLL4L	244HLW3L	244HLW4L
FM90A.	**4**	**24**	$2838	3165	3074	3317	3588	3832
	5	**24**	$3184	3280	3352	3440	3890	3954
	6	**24**	$3306	3397	3479	3562	3832	4076
	7	**24**	$3427	3514	3440	3685	3954	4199

			242BRP3L	242BRP4L	242BRL3L	242BRL4L	242BRW3L	242BRW4L
FM90K.	**4**	**24**	$3062	3318	3223	3478	3762	4018
	5	**24**	$3184	3439	3352	3607	3889	4145
	6	**24**	$3306	3562	3479	3735	4018	4274
	7	**24**	$3427	3684	3607	3864	4146	4403

			242BLP3L	242BLP4L	242BLL3L	242BLL4L	242BLW3L	242BLW4L
FM90K.	**4**	**24**	$3062	3318	3224	3478	3762	4018
	5	**24**	$3184	3439	3352	3607	3889	4145
	6	**24**	$3306	3562	3479	3735	4018	4274

7	24	$3427	3685	3607	3864	4145	4403

		242CRP3L	242CRP4L	242CRL3L	242CRL4L	242CRW3L	242CRW4L
FM90K. 4	24	$3126	3382	3285	3542	3825	4081
5	24	$3246	3502	3415	3671	3951	4209
6	24	$3125	3382	3415	3671	4081	4336
7	24	$3491	3748	3672	3926	4209	4465

		242CLP3L	242CLP4L	242CLL3L	242CLL4L	242CLW3L	242CLW4L
FM90K. 4	24	$3126	3382	3285	3542	3825	4081
5	24	$3246	3502	3415	3671	3951	4209
6	24	$3125	3382	3415	3671	4081	4336
7	24	$3491	3748	3672	3926	4209	4465

		244HRP3L	244HRP4L	244HRL3L	244HRL4L	244HRW3L	244HRW4L
FM90K. 4	24	$3062	3318	3223	3478	3762	4018
5	24	$3184	3439	3352	3607	3889	4145
6	24	$3306	3562	3479	3735	4018	4274
7	24	$3427	3684	3607	3864	4145	4403

		244HLP3L	244HLP4L	244HLL3L	244HLL4L	244HLW3L	244HLW4L
FM90K. 4	24	$3062	3318	3223	3478	3762	4018
5	24	$3184	3439	3352	3607	3889	4145
6	24	$3306	3562	3479	3735	4018	4274
7	24	$3427	3685	3607	3864	4145	4403

Step 11. Paint/Steel Type

SS	smooth paint on smooth steel A	+$0
XS	textured paint on smooth steel A	+$0

Step 12. Surface Finish

Metallic Paint

For smooth paint on smooth steel (SS)

CN	metallic champagne A	+$0
EH	metallic bronze A	+$0
MS	metallic silver A	+$0

Sand Texture Paint

For textured paint on smooth steel (XS)

8Q	folkstone grey A	+$0
91	white A	+$0
98	studio white A	+$0
BK	black A	+$0
CL	cool grey neutral A	+$0
G1	graphite A	+$0
WL	sandstone A	+$0
WN	warm grey neutral A	+$0

Step 13. Front Finish

Solid-Color Laminate

For laminate front (L)

8Q	folkstone grey A	+$0
91	white A	+$0
98	studio white	+$0
CL	cool grey neutral A	+$0
LU	soft white A	+$0
WL	sandstone A	+$0
WN	warm grey neutral A	+$0

Linen Laminate

For laminate front (L)

LBM	crisp linen	+$0
LBN	classic linen	+$0
LBP	casual linen	+$0

Mesh Laminate

For laminate front (L)

LBK	pewter mesh	+$0
LBL	steel mesh	+$0

Twill Laminate

For laminate front (L)

LBF	neutral twill	+$0
LBG	sarum twill	+$0
LBH	earthen twill	+$0
LBJ	graphite twill	+$0
LBQ	white twill	+$0

Metal Vertical Tower, Thin Top

continued

Wood-Grain Laminate

For laminate front (L)

HM	natural maple A	+$0
HP	light anigre A	+$0
LBA	clear on ash	+$0
LBR	phantom ecru	+$0
LBS	phantom cocoa	+$0
LBU	medium matte walnut	+$0
LBV	warm grey teak	+$0
LBB	oak on ash	+$0
LBC	walnut on ash	+$0
LBD	dark brown walnut	+$0
LBE	medium red walnut	+$0
76	light brown walnut A	+$0
HX	aged cherry A	+$0
HY	walnut on cherry A	+$0

Wood Veneer

For veneer front (W)

2U	light brown walnut A	+$0
40	dark brown walnut A	+$0
ED	aged cherry A	+$0
EK	medium red walnut A	+$0
EW	medium matte walnut A	+$0
ET	clear on ash A	+$0
EU	oak on ash A	+$0
EV	walnut on ash A	+$0
UL	natural maple A	+$0
UX	walnut on cherry A	+$0

Step 14. Top Finish

Solid-Color Laminate

For 3/8" laminate top (3)

8Q	folkstone grey A	+$0
91	white A	+$0
98	studio white	+$0
CL	cool grey neutral A	+$0
LU	soft white A	+$0
WL	sandstone A	+$0
WN	warm grey neutral A	+$0

Linen Laminate

For 3/8" laminate top (3)

LBM	crisp linen	+$0
LBN	classic linen	+$0
LBP	casual linen	+$0

Mesh Laminate

For 3/8" laminate top (3)

LBK	pewter mesh	+$0
LBL	steel mesh	+$0

Twill Laminate

For 3/8" laminate top (3)

LBF	neutral twill	+$0
LBG	sarum twill	+$0
LBH	earthen twill	+$0
LBJ	graphite twill	+$0
LBQ	white twill	+$0

Wood-Grain Laminate

For 3/8" laminate top (3)

HM	natural maple A	+$0
HP	light anigre A	+$0
LBA	clear on ash	+$0
LBR	phantom ecru	+$0
LBS	phantom cocoa	+$0
LBU	medium matte walnut	+$0
LBV	warm grey teak	+$0
LBB	oak on ash	+$0
LBC	walnut on ash	+$0
LBD	dark brown walnut	+$0
LBE	medium red walnut	+$0
76	light brown walnut A	+$0
HX	aged cherry A	+$0
HY	walnut on cherry A	+$0

Wood Veneer

For 3/8" veneer top (4)

2U	light brown walnut A	+$0
40	dark brown walnut A	+$0
ED	aged cherry A	+$0
EK	medium red walnut A	+$0
EW	medium matte walnut A	+$0
ET	clear on ash A	+$0
EU	oak on ash A	+$0
EV	walnut on ash A	+$0
UL	natural maple A	+$0
UX	walnut on cherry A	+$0

Step 15. Base Finish *For 4"-high foot (4)*		
Sand Texture Paint		
8Q	folkstone grey A	+$0
91	white A	+$0
98	studio white A	+$0
BK	black A	+$0
CL	cool grey neutral A	+$0
G1	graphite A	+$0
WL	sandstone A	+$0
WN	warm grey neutral A	+$0
Metallic Paint		
CN	metallic champagne A	+$0
EH	metallic bronze A	+$0
MS	metallic silver A	+$0

Step 16. Pull Finish		
For arc pull (A.)		
NH	brushed nickel A	+$0
NK	black nickel A	+$0
Metallic Paint *For bar pull (K.)*		
CN	metallic champagne A	+$0
MS	metallic silver A	+$0
Sand Texture Paint *For bar pull (K.)*		
BK	black A	+$0
79	green apple A	+$15
MY3	yellow oxide A	+$15
RO	red A	+$15
TRQ	turquoise A	+$15
Smooth Paint *For bar pull (K.)*		
8Q	folkstone grey A	+$0
91	white A	+$0
98	studio white A	+$0
G1	graphite A	+$0
WL	sandstone A	+$0

Step 17. Lock Option		
KA	keyed alike A	-$10
KC	keyed differently, chrome A	+$0
KD	keyed differently, black A	+$0

Metal Vertical Tower, Thin Top Side Facing Bookcase

FM91A.
FM91K.

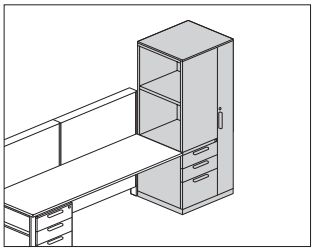

Product Information

Description

This freestanding tower has a 3/8"-high laminate or veneer top and a steel case with a painted front. It has a wardrobe on 1 side and a side-facing bookcase over pedestal drawers on the other side. The tower has a 2 1/4"-high base 1" leveling glides.

Actual tower heights are 41 1/2", 45 1/2", 56 1/2", or 67 1/2"; actual width is 23 7/8"; actual depth is 23 7/8".

The wardrobe includes a coat rod.

The bookcase has 1 or 2 adjustable shelves that adjust in 1 1/4" increments.

The pedestal has 1 lock that secures all drawers. It includes a positive interlock system that permits only 1 drawer to open at a time. Drawers have full-extension ball-bearing slides. File drawers accommodate front-to-back filing of letter-size hanging files.

Notes

For additional product options, see Vary Easy Program® in Appendices.

Arc pull option (A.) conforms to guidelines of Americans with Disabilities Act (ADA).

Grain direction is vertical on veneer and wood-grain laminate fronts.

Dimensional illustrations do not include all possible configurations.

For keyed-alike locks, see Keyed-Alike Information in Appendices.

Dimensions

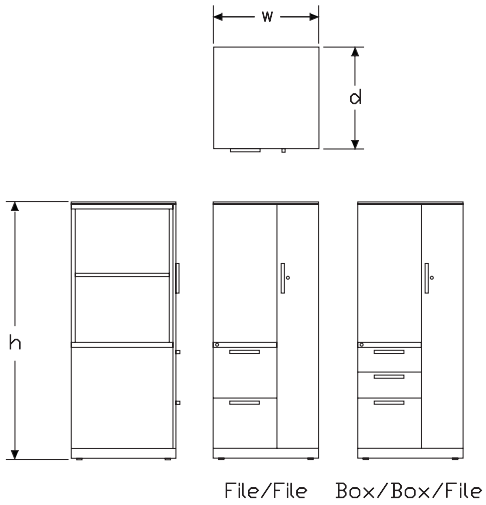

Specification Information

Step 1.

FM91 A

Step 2. Pull Type

A. arc pull A
K. bar pull A

Step 3. Height

4 42" high A
5 46" high A
6 57" high A
7 68" high A

Step 4. Width

24 24" wide A

Step 5. Depth

24 24" deep A

Step 6. Base/Foot Height

2 2 1/4"-high base A

Step 7. Configuration

BR file/file, wardrobe right A
BL file/file, wardrobe left A
CR box/box/file, wardrobe right A
CL box/box/file, wardrobe left A

Step 8. Front Material

P painted metal front A

Step 9. Top

3 3/8" laminate top A
4 3/8" veneer top A

Step 10. Lock

L lock A

Prices for Steps 1-10.

			242BRP3L	242BRP4L	242BLP3L	242BLP4L	242CRP3L	242CRP4L
FM91A.	**4**	**24**	$3074	3317	3074	3317	3133	3378
	5	**24**	$3106	3440	3197	3440	3257	3501
	6	**24**	$3317	3562	3223	3562	3378	3622
	7	**24**	$3343	3685	3440	3685	3501	3745

Metal Vertical Tower, Thin Top Side Facing Bookcase *continued*

			242CLP3L	242CLP4L
FM91A.	**4**	**24**	$3133	3378
	5	**24**	$3257	3501
	6	**24**	$3378	3622
	7	**24**	$3501	3745

			242BRP3L	242BRP4L	242BLP3L	242BLP4L	242CRP3L	242CRP4L
FM91K.	**4**	**24**	$2987	3317	2987	3317	3133	3378
	5	**24**	$3197	3440	3197	3440	3165	3501
	6	**24**	$3317	3562	3317	3562	3378	3622
	7	**24**	$3440	3685	3440	3685	3501	3745

			242CLP3L	242CLP4L
FM91K.	**4**	**24**	$3133	3378
	5	**24**	$3165	3501
	6	**24**	$3378	3622
	7	**24**	$3501	3745

Step 11. Paint/Steel Type

SS	smooth paint on smooth steel A	+$0
XS	textured paint on smooth steel A	+$0

Step 12. Surface Finish

Metallic Paint

For smooth paint on smooth steel (SS)

CN	metallic champagne A	+$0
EH	metallic bronze A	+$0
MS	metallic silver A	+$0

For textured paint on smooth steel (XS)

8Q	folkstone grey A	+$0
91	white A	+$0
98	studio white A	+$0
BK	black A	+$0
CL	cool grey neutral A	+$0
G1	graphite A	+$0
WL	sandstone A	+$0
WN	warm grey neutral A	+$0

Step 13. Top Finish

Solid-Color Laminate

For 3/8" laminate top (3)

8Q	folkstone grey A	+$0
91	white A	+$0
98	studio white	+$0
CL	cool grey neutral A	+$0
LU	soft white A	+$0
WL	sandstone A	+$0
WN	warm grey neutral A	+$0

Linen Laminate

For 3/8" laminate top (3)

LBM	crisp linen	+$0
LBN	classic linen	+$0
LBP	casual linen	+$0

Mesh Laminate

For 3/8" laminate top (3)

LBK	pewter mesh	+$0
LBL	steel mesh	+$0

Twill Laminate

For 3/8" laminate top (3)

LBF	neutral twill	+$0
LBG	sarum twill	+$0
LBH	earthen twill	+$0
LBJ	graphite twill	+$0
LBQ	white twill	+$0

Wood-Grain Laminate

For 3/8" laminate top (3)

76	light brown walnut A	+$0
HM	natural maple A	+$0
HP	light anigre A	+$0
HX	aged cherry A	+$0
HY	walnut on cherry A	+$0
LBA	clear on ash	+$0
LBR	phantom ecru	+$0
LBS	phantom cocoa	+$0
LBU	medium matte walnut	+$0
LBV	warm grey teak	+$0
LBB	oak on ash	+$0
LBC	walnut on ash	+$0
LBD	dark brown walnut	+$0
LBE	medium red walnut	+$0

Metal Vertical Tower, Thin Top Side Facing Bookcase *continued*

Wood Veneer

For 3/8" veneer top (4)

2U	light brown walnut A	+$0
40	dark brown walnut A	+$0
ED	aged cherry A	+$0
EK	medium red walnut A	+$0
EW	medium matte walnut A	+$0
ET	clear on ash A	+$0
EU	oak on ash A	+$0
EV	walnut on ash A	+$0
UL	natural maple A	+$0
UX	walnut on cherry A	+$0

Step 14. Pull Finish

For arc pull (A.)

NH	brushed nickel A	+$0
NK	black nickel A	+$0

Metallic Paint

For bar pull (K.)

CN	metallic champagne A	+$0
MS	metallic silver A	+$0

Sand Texture Paint

For bar pull (K.)

BK	black A	+$0
79	green apple A	+$15
MY3	yellow oxide A	+$15
RO	red A	+$15
TRQ	turquoise A	+$15

Smooth Paint

For bar pull (K.)

8Q	folkstone grey A	+$0
91	white A	+$0
98	studio white A	+$0
G1	graphite A	+$0
WL	sandstone A	+$0

Step 15. Lock Option

KA	keyed alike A	-$10
KC	keyed differently, chrome A	+$0
KD	keyed differently, black A	+$0

Canvas Vertical Tower Attachment Bracket FM930.

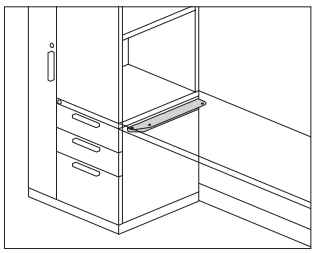

Product Information

Description

This bracket attaches to the side of a Canvas metal vertical storage tower to support 1 end of a 24" deep surface, eliminating the need for a support leg or cantilever. Finish is black. Attachment hardware included.

Notes

Bracket must attach to the pedestal side of storage tower.

Bracket does not provide support for a panel or frame.

Dimensions

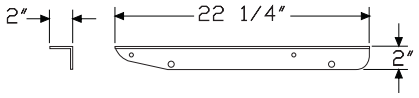

Specification Information

Step 1.

FM930.	$44

Tu® Storage Tower Attachment Bracket LG692

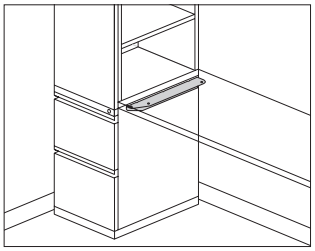

Product Information

Description

This bracket attaches to the side of a Tu Metal storage tower to support 1 end of a 24″ deep surface, eliminating the need for a support leg or cantilever. Finish is black. Attachment hardware included.

Notes

Bracket must attach to the pedestal side of a metal storage tower.

Bracket does not provide support for a panel or frame.

Dimensions

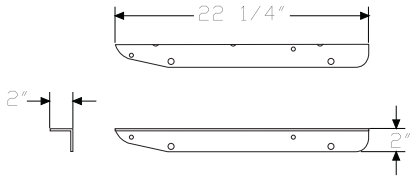

Specification Information

Step 1.

LG692	$45

Meridian® Vertical Tower Attachment Bracket

MTAB.

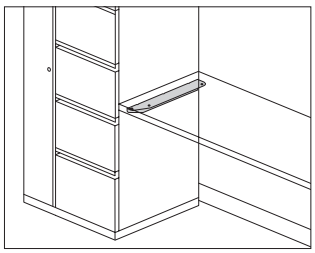

Product Information

Description

This bracket attaches to the side of a storage tower to support 1 end of a surface, eliminating the need for a support leg or cantilever. Finish is black. Attachment hardware included.

Notes

Bracket must attach to the pedestal side of storage tower.

Bracket does not provide support for a panel or frame.

Dimensions

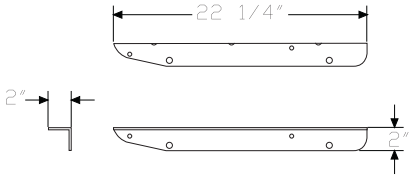

Specification Information

Step 1.

MTAB.	$41

Wood Case Lateral Files

Wood Case Pedestals

Wood Case Pedestal Accessories

Wood Case Credenzas

Wood Case Credenza Accessories

Wood Case Bookcases and Towers

Wood Case Attached Storage

Wood Case Attached Storage (Legacy Products)

Wood Case Attached Storage Organizers

Wood Case Attached Storage Accessories (Legacy Products)

Wood Freestanding Lateral File

FF20A.
FF20K.

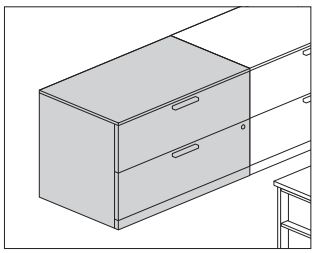

Product Information

Description

This lateral file has a 3/8"-high laminate or veneer top, and the choice of a laminate case and front, veneer case and front, or laminate case with veneer front. It has a 2 1/4"-high base with 1" leveling glides and a positive interlock system that permits only 1 drawer to open at a time. Drawers have full-extension ball-bearing slides and accommodate side-to-side and front-to-back filing of letter-, legal, and A4-size hanging files.

Actual file widths are 29 7/8", 35 7/8", or 41 7/8"; actual depth is 19 7/8".

Notes

For additional product options, see Vary Easy Program in Appendices.

Arc pull option (A.) conforms to guidelines of Americans with Disabilities Act (ADA).

Grain direction is vertical on veneer and wood-grain laminate fronts.

For information on counterweight option (CB), see Canvas Planning Guide.

For keyed-alike locks, see Keyed-Alike Information in Appendices.

No top (NT) option includes spacer kit that creates 1/4" reveal between the top of a wood pedestal, lateral file, or high credenza and a 1 1/4"-thick worksurface placed at 28 1/4" high. Worksurface ordered separately.

Dimensions

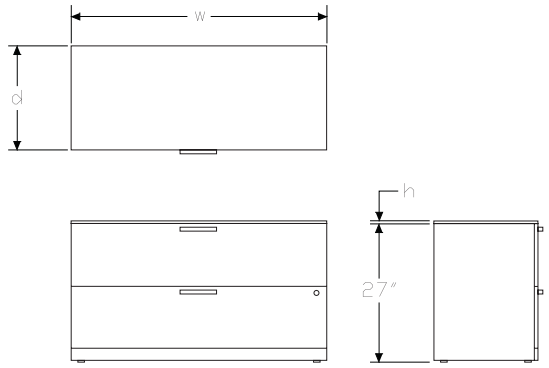

Specification Information

Step 1.

FF20 A

Step 2. Pull Type

A. arc pull A
K. bar pull A

Step 3. Width

30 30" wide A
36 36" wide A
42 42" wide A

Step 4. Depth

20 20" deep A

Step 5. Configuration

FF file/file A

Step 6. Base Height

2 2 1/4"-high base A

Step 7. Case/Front Material

L laminate A
C laminate case/veneer door A
W veneer A

Step 8. Top

For file/file (FF) with laminate (L)

NT no top A
03 3/8" laminate top A
04 3/8" veneer top A

For file/file (FF) with laminate case/veneer door (C)

NT no top A
03 3/8" laminate top A
04 3/8" veneer top A

For file/file (FF) with veneer (W)

NT no top A
04 3/8" veneer top A

Step 9. Lock

L lock A

Wood Freestanding Lateral File

continued

Prices for Steps 1-9.

			FF2LNTL	FF2L03L	FF2L04L	FF2CNTL	FF2C03L	FF2C04L
FF20A.	**30**	**20**	$2332	2444	2669	2801	2913	3137
	36	**20**	$2557	2669	2893	3090	3201	3425
	42	**20**	$2781	2893	3117	3358	3472	3696

			FF2WNTL	FF2W04L
FF20A.	**30**	**20**	$3160	3497
	36	**20**	$3507	3842
	42	**20**	$3830	4166

			FF2LNTL	FF2L03L	FF2L04L	FF2CNTL	FF2C03L	FF2C04L
FF20K.	**30**	**20**	$2332	2444	2697	2801	2944	3170
	36	**20**	$2557	2669	2924	3090	3235	3461
	42	**20**	$2781	2893	3150	3394	3472	3735

			FF2WNTL	FF2W04L
FF20K.	**30**	**20**	$3160	3497
	36	**20**	$3507	3842
	42	**20**	$3830	4166

Step 10. Case Finish

Solid-Color Laminate

For laminate (L) or laminate case/veneer door (C)

8Q	folkstone grey A	+$0
91	white A	+$0
98	studio white	+$0
CL	cool grey neutral A	+$0
LU	soft white A	+$0
WL	sandstone A	+$0
WN	warm grey neutral A	+$0

Linen Laminate

For laminate (L) or laminate case/veneer door (C)

LBM	crisp linen	+$0
LBN	classic linen	+$0
LBP	casual linen	+$0

Mesh Laminate

For laminate (L) or laminate case/veneer door (C)

LBK	pewter mesh	+$0
LBL	steel mesh	+$0

Twill Laminate

For laminate (L) or laminate case/veneer door (C)

LBF	neutral twill	+$0
LBG	sarum twill	+$0
LBH	earthen twill	+$0
LBJ	graphite twill	+$0
LBQ	white twill	+$0

Wood-Grain Laminate

For laminate (L) or laminate case/veneer door (C)

HM	natural maple A	+$0
HP	light anigre A	+$0
LBA	clear on ash	+$0
LBR	phantom ecru	+$0
LBS	phantom cocoa	+$0
LBU	medium matte walnut	+$0
LBV	warm grey teak	+$0
LBB	oak on ash	+$0
LBC	walnut on ash	+$0
LBD	dark brown walnut	+$0
LBE	medium red walnut	+$0
76	light brown walnut A	+$0
HX	aged cherry A	+$0
HY	walnut on cherry A	+$0

Wood Veneer

For veneer (W)

2U	light brown walnut A	+$0
40	dark brown walnut A	+$0
ED	aged cherry A	+$0
EK	medium red walnut A	+$0
EW	medium matte walnut A	+$0
ET	clear on ash A	+$0
EU	oak on ash A	+$0
EV	walnut on ash A	+$0
UL	natural maple A	+$0
UX	walnut on cherry A	+$0

Wood Freestanding Lateral File

continued

Step 11. Front Finish

Solid-Color Laminate

For laminate (L)

8Q	folkstone grey [A]	+$0
91	white [A]	+$0
98	studio white	+$0
CL	cool grey neutral [A]	+$0
LU	soft white [A]	+$0
WL	sandstone [A]	+$0
WN	warm grey neutral [A]	+$0

Linen Laminate

For laminate (L)

LBM	crisp linen	+$0
LBN	classic linen	+$0
LBP	casual linen	+$0

Mesh Laminate

For laminate (L)

LBK	pewter mesh	+$0
LBL	steel mesh	+$0

Twill Laminate

For laminate (L)

LBF	neutral twill	+$0
LBG	sarum twill	+$0
LBH	earthen twill	+$0
LBJ	graphite twill	+$0
LBQ	white twill	+$0

Wood-Grain Laminate

For laminate (L)

HM	natural maple [A]	+$0
HP	light anigre [A]	+$0
LBA	clear on ash	+$0
LBR	phantom ecru	+$0
LBS	phantom cocoa	+$0
LBU	medium matte walnut	+$0
LBV	warm grey teak	+$0
LBB	oak on ash	+$0
LBC	walnut on ash	+$0
LBD	dark brown walnut	+$0
LBE	medium red walnut	+$0
76	light brown walnut [A]	+$0
HX	aged cherry [A]	+$0
HY	walnut on cherry [A]	+$0

Wood Veneer

For laminate case/veneer door (C) or veneer (W)

2U	light brown walnut [A]	+$0
40	dark brown walnut [A]	+$0
ED	aged cherry [A]	+$0
EK	medium red walnut [A]	+$0
EW	medium matte walnut [A]	+$0
ET	clear on ash [A]	+$0
EU	oak on ash [A]	+$0
EV	walnut on ash [A]	+$0
UL	natural maple [A]	+$0
UX	walnut on cherry [A]	+$0

Step 12. Top Finish

Solid-Color Laminate

For 3/8" laminate top (03)

8Q	folkstone grey [A]	+$0
91	white [A]	+$0
98	studio white	+$0
CL	cool grey neutral [A]	+$0
LU	soft white [A]	+$0
WL	sandstone [A]	+$0
WN	warm grey neutral [A]	+$0

Linen Laminate

For 3/8" laminate top (03)

LBM	crisp linen	+$0
LBN	classic linen	+$0
LBP	casual linen	+$0

Mesh Laminate

For 3/8" laminate top (03)

LBK	pewter mesh	+$0
LBL	steel mesh	+$0

Twill Laminate

For 3/8" laminate top (03)

LBF	neutral twill	+$0
LBG	sarum twill	+$0
LBH	earthen twill	+$0
LBJ	graphite twill	+$0
LBQ	white twill	+$0

Wood Freestanding Lateral File

continued

Wood-Grain Laminate		
For 3/8" laminate top (03)		
HM	natural maple A	+$0
HP	light anigre A	+$0
LBA	clear on ash	+$0
LBR	phantom ecru	+$0
LBS	phantom cocoa	+$0
LBU	medium matte walnut	+$0
LBV	warm grey teak	+$0
LBB	oak on ash	+$0
LBC	walnut on ash	+$0
LBD	dark brown walnut	+$0
LBE	medium red walnut	+$0
76	light brown walnut A	+$0
HX	aged cherry A	+$0
HY	walnut on cherry A	+$0

Wood Veneer		
For 3/8" veneer top (04)		
2U	light brown walnut A	+$0
40	dark brown walnut A	+$0
ED	aged cherry A	+$0
EK	medium red walnut A	+$0
EW	medium matte walnut A	+$0
ET	clear on ash A	+$0
EU	oak on ash A	+$0
EV	walnut on ash A	+$0
UL	natural maple A	+$0
UX	walnut on cherry A	+$0

Step 13. Pull Finish		
For arc pull (A.)		
NH	brushed nickel A	+$0
NK	black nickel A	+$0

Step 14. Pull Finish		
For bar pull (K.)		

Metallic Paint		
CN	metallic champagne A	+$0
MS	metallic silver A	+$0

Sand Texture Paint		
BK	black A	+$0
79	green apple A	+$15
MY3	yellow oxide A	+$15
RO	red A	+$15
TRQ	turquoise A	+$15

Smooth Paint		
8Q	folkstone grey A	+$0
91	white A	+$0
98	studio white A	+$0
G1	graphite A	+$0
WL	sandstone A	+$0

Step 15. Counterweight		
NO	no counterweight A	+$0
CB	counterweight A	+$70

Step 16. Lock Option		
KA	keyed alike A	-$10
KC	keyed differently, chrome A	+$0
KD	keyed differently, black A	+$0

Wood Freestanding Pedestal

FF10A.
FF10K.

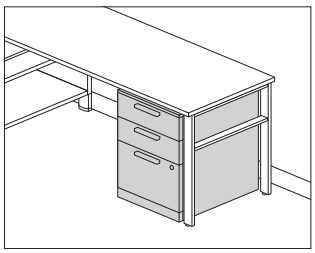

Product Information

Description

This pedestal has a 3/8"-high laminate or veneer top and the choice of a laminate case and front, veneer case and front, or laminate case with veneer front. It is available with 4"-high architectural feet or a 2 1/4"-high base with 1" leveling glides. The drawers have full-extension ball-bearing slides. File drawers accommodate front-to-back filing of letter-size hanging files.

Actual pedestal depths are 19 7/8", 22 7/8", or 28 7/8".

Notes

For additional product options, see Vary Easy Program in Appendices.

Arc pull option (A.) conforms to guidelines of Americans with Disabilities Act (ADA).

Grain direction is vertical on veneer and wood-grain laminate fronts.

For keyed-alike locks, see Keyed-Alike Information in Appendices.

No top (NT) option includes spacer kit that creates 1/4" reveal between the top of a wood pedestal, lateral file, or high credenza and a 1 1/4"-thick worksurface placed at 28 1/4" high. Worksurface ordered separately.

Dimensions

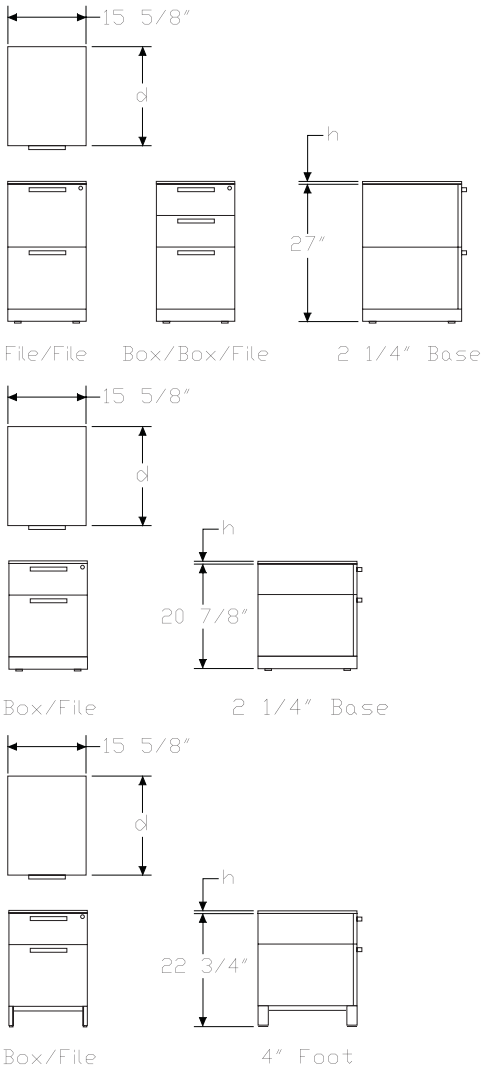

Wood Freestanding Pedestal

continued

Specification Information

Step 1.

FF10 A

Step 2. Pull Type

A. arc pull A
K. bar pull A

Step 3. Depth

20 20" deep A
24 24" deep A
30 30" deep A

Step 4. Configuration

BBF box/box/file A
FF file/file A
BF box/file A

Step 5. Base/Foot Height

For box/box/file (BBF) or file/file (FF)

2 2 1/4"-high base A

For box/file (BF)

2 2 1/4"-high base A
4 4"-high foot A

Step 6. Case/Front Material

For 2 1/4"-high base (2)

L laminate case/front A
C laminate case/veneer front A
W veneer case/front A

For 4"-high foot (4)

L laminate case/front A
C laminate case/veneer front A

Step 7. Top

For box/file (BF) with laminate case/front (L)

03 3/8" laminate top A
04 3/8" veneer top A

For box/file (BF) with laminate case/veneer front (C)

03 3/8" laminate top A
04 3/8" veneer top A

For box/file (BF) with veneer case/front (W)

04 3/8" veneer top A

For box/box/file (BBF) or file/file (FF) with laminate case/front (L)

NT no top A
03 3/8" laminate top A
04 3/8" veneer top A

For box/box/file (BBF) or file/file (FF) with laminate case/veneer front (C)

NT no top A
03 3/8" laminate top A
04 3/8" veneer top A

For box/box/file (BBF) or file/file (FF) with veneer case/front (W)

NT no top A
04 3/8" veneer top A

Step 8. Lock

L lock A

Prices for Steps 1-8.

			2LNTL	2L03L	2L04L	2CNTL	2C03L	2C04L
FF10A.	**20**	**BBF**	$1880	1968	2088	2271	2362	2570
		FF	$1820	1909	2117	2201	2291	2499
		BF	—	$1784	1993	—	2140	2350
	24	**BBF**	$1981	2069	2277	2395	2482	2690
		FF	$1921	2010	2217	2322	2411	2620
		BF	—	$1885	2094	—	2262	2469
	30	**BBF**	$2165	2257	2473	2617	2708	2924
		FF	$2022	2111	2319	2443	2532	2740
		BF	—	$1986	2195	—	2382	2590

			2WNTL	2W04L	4L03L	4L04L	4C03L	4C04L
FF10A.	**20**	**BBF**	$2733	2955	—	—	—	—
		FF	$2643	2865	—	—	—	—
		BF	—	$2678	1814	2022	2140	2350
	24	**BBF**	$2886	3107	—	—	—	—
		FF	$2742	2958	—	—	—	—
		BF	—	$2829	1916	2122	2262	2469
	30	**BBF**	$3037	3256	—	—	—	—
		FF	$2947	3169	—	—	—	—
		BF	—	$2981	2016	2224	2382	2590

			2LNTL	2L03L	2L04L	2CNTL	2C03L	2C04L
FF10K.	**20**	**BBF**	$1880	1968	2111	2271	2387	2597
		FF	$1820	1909	2140	2201	2291	2526
		BF	—	$1784	2014	—	2163	2375

Wood Freestanding Pedestal

continued

24	BBF	$1981	2069	2301	2421	2482	2719
	FF	$1921	2010	2241	2347	2436	2648
	BF	—	$1906	2116	—	2286	2495
30	BBF	$2081	2170	2402	2543	2606	2839
	FF	$2022	2133	2344	2469	2559	2769
	BF	—	$2008	2218	—	2408	2618

			2WNTL	2W04L	4L03L	4L04L	4C03L	4C04L
FF10K.	20	BBF	$2733	2955	—	—	—	—
		FF	$2643	2865	—	—	—	—
		BF	—	$2707	1814	2044	2163	2375
	24	BBF	$2886	3107	—	—	—	—
		FF	$2796	3017	—	—	—	—
		BF	—	$2859	1936	2145	2286	2495
	30	BBF	$3037	3256	—	—	—	—
		FF	$2947	3202	—	—	—	—
		BF	—	$3013	2016	2248	2408	2618

Step 9. Case Finish

Solid-Color Laminate

For laminate case/front (L) or laminate case/veneer front (C)

8Q	folkstone grey A	+$0
91	white A	+$0
98	studio white	+$0
CL	cool grey neutral A	+$0
LU	soft white A	+$0
WL	sandstone A	+$0
WN	warm grey neutral A	+$0

Linen Laminate

For laminate case/front (L) or laminate case/veneer front (C)

LBM	crisp linen	+$0
LBN	classic linen	+$0
LBP	casual linen	+$0

Mesh Laminate

For laminate case/front (L) or laminate case/veneer front (C)

LBK	pewter mesh	+$0
LBL	steel mesh	+$0

Twill Laminate

For laminate case/front (L) or laminate case/veneer front (C)

LBF	neutral twill	+$0
LBG	sarum twill	+$0
LBH	earthen twill	+$0
LBJ	graphite twill	+$0
LBQ	white twill	+$0

Wood-Grain Laminate

For laminate case/front (L) or laminate case/veneer front (C)

HM	natural maple A	+$0
HP	light anigre A	+$0
LBA	clear on ash	+$0
LBR	phantom ecru	+$0
LBS	phantom cocoa	+$0
LBU	medium matte walnut	+$0
LBV	warm grey teak	+$0
LBB	oak on ash	+$0
LBC	walnut on ash	+$0
LBD	dark brown walnut	+$0
LBE	medium red walnut	+$0
76	light brown walnut A	+$0
HX	aged cherry A	+$0
HY	walnut on cherry A	+$0

Wood Veneer

For veneer case/front (W)

2U	light brown walnut A	+$0
40	dark brown walnut A	+$0
ED	aged cherry A	+$0
EK	medium red walnut A	+$0
EW	medium matte walnut A	+$0
ET	clear on ash A	+$0
EU	oak on ash A	+$0
EV	walnut on ash A	+$0
UL	natural maple A	+$0
UX	walnut on cherry A	+$0

Wood Freestanding Pedestal

continued

Step 10. Front Finish

Solid-Color Laminate

For laminate case/front (L)

8Q	folkstone grey A	+$0
91	white A	+$0
98	studio white	+$0
CL	cool grey neutral A	+$0
LU	soft white A	+$0
WL	sandstone A	+$0
WN	warm grey neutral A	+$0

Linen Laminate

For laminate case/front (L)

LBM	crisp linen	+$0
LBN	classic linen	+$0
LBP	casual linen	+$0

Mesh Laminate

For laminate case/front (L)

LBK	pewter mesh	+$0
LBL	steel mesh	+$0

Twill Laminate

For laminate case/front (L)

LBF	neutral twill	+$0
LBG	sarum twill	+$0
LBH	earthen twill	+$0
LBJ	graphite twill	+$0
LBQ	white twill	+$0

Wood-Grain Laminate

For laminate case/front (L)

HM	natural maple A	+$0
HP	light anigre A	+$0
LBA	clear on ash	+$0
LBR	phantom ecru	+$0
LBS	phantom cocoa	+$0
LBU	medium matte walnut	+$0
LBV	warm grey teak	+$0
LBB	oak on ash	+$0
LBC	walnut on ash	+$0
LBD	dark brown walnut	+$0
LBE	medium red walnut	+$0
76	light brown walnut A	+$0
HX	aged cherry A	+$0
HY	walnut on cherry A	+$0

Wood Veneer

For laminate case/veneer front (C) or veneer case/front (W)

2U	light brown walnut A	+$0
40	dark brown walnut A	+$0
ED	aged cherry A	+$0
EK	medium red walnut A	+$0
EW	medium matte walnut A	+$0
ET	clear on ash A	+$0
EU	oak on ash A	+$0
EV	walnut on ash A	+$0
UL	natural maple A	+$0
UX	walnut on cherry A	+$0

Step 11. Top Finish

Solid-Color Laminate

For 3/8" laminate top (03)

8Q	folkstone grey A	+$0
91	white A	+$0
98	studio white	+$0
CL	cool grey neutral A	+$0
LU	soft white A	+$0
WL	sandstone A	+$0
WN	warm grey neutral A	+$0

Linen Laminate

For 3/8" laminate top (03)

LBM	crisp linen	+$0
LBN	classic linen	+$0
LBP	casual linen	+$0

Mesh Laminate

For 3/8" laminate top (03)

LBK	pewter mesh	+$0
LBL	steel mesh	+$0

Twill Laminate

For 3/8" laminate top (03)

LBF	neutral twill	+$0
LBG	sarum twill	+$0
LBH	earthen twill	+$0
LBJ	graphite twill	+$0
LBQ	white twill	+$0

Wood Freestanding Pedestal

continued

Wood-Grain Laminate

For 3/8" laminate top (03)

HM	natural maple A	+$0
HP	light anigre A	+$0
LBA	clear on ash	+$0
LBR	phantom ecru	+$0
LBS	phantom cocoa	+$0
LBU	medium matte walnut	+$0
LBV	warm grey teak	+$0
LBB	oak on ash	+$0
LBC	walnut on ash	+$0
LBD	dark brown walnut	+$0
LBE	medium red walnut	+$0
76	light brown walnut A	+$0
HX	aged cherry A	+$0
HY	walnut on cherry A	+$0

Wood Veneer

For 3/8" veneer top (04)

2U	light brown walnut A	+$0
40	dark brown walnut A	+$0
ED	aged cherry A	+$0
EK	medium red walnut A	+$0
EW	medium matte walnut A	+$0
ET	clear on ash A	+$0
EU	oak on ash A	+$0
EV	walnut on ash A	+$0
UL	natural maple A	+$0
UX	walnut on cherry A	+$0

Step 12. Foot Finish

For 4"-high foot (4)

Metallic Paint

MS	metallic silver A	+$0
EH	metallic bronze A	+$0
CN	metallic champagne A	+$0

Sand Texture Paint

91	white A	+$0
BK	black A	+$0
CL	cool grey neutral A	+$0
G1	graphite A	+$0
WN	warm grey neutral A	+$0

Step 13. Pull Finish

For arc pull (A.)

NH	brushed nickel A	+$0
NK	black nickel A	+$0

Metallic Paint

For bar pull (K.)

CN	metallic champagne A	+$0
MS	metallic silver A	+$0

Sand Texture Paint

For bar pull (K.)

BK	black A	+$0
79	green apple A	+$15
MY3	yellow oxide A	+$15
RO	red A	+$15
TRQ	turquoise A	+$15

Smooth Paint

For bar pull (K.)

8Q	folkstone grey A	+$0
91	white A	+$0
98	studio white A	+$0
G1	graphite A	+$0
WL	sandstone A	+$0

Step 14. Counterweight

NO	no counterweight A	+$0
CB	counterweight A	+$24

Step 15. Lock Option

KA	keyed alike A	-$10
KC	keyed differently, chrome A	+$0
KD	keyed differently, black A	+$0

Wood Mobile Pedestal

FF11A.
FF11K.

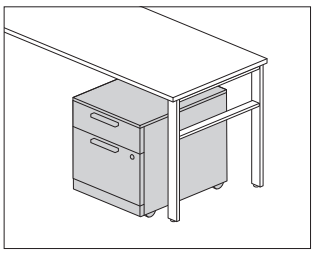

Product Information

Description

This pedestal has a 3/8"-high laminate or veneer top and the choice of a laminate case and front, veneer case and front, or laminate case with veneer front. It has concealed casters and full-extension ball-bearing slides on the drawers. File drawers accommodate front-to-back filing of letter-size hanging files.

Actual file depth is 17 7/8".

Notes

For additional product options, see Vary Easy Program® in Appendices.

Arc pull option (A.) conforms to guidelines of Americans with Disabilities Act (ADA).

Grain direction is vertical on veneer and wood-grain laminate fronts.

For keyed-alike locks, see Keyed-Alike Information in Appendices.

Dimensions

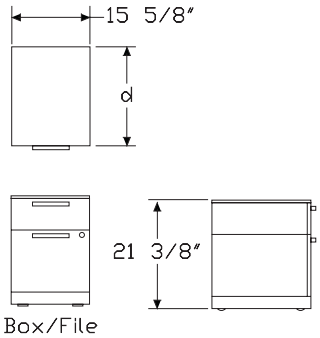

Specification Information

Step 1.

FF11 A

Step 2. Pull Type

A. arc pull A

K. bar pull A

Step 3. Depth

18 18" deep A

Step 4. Configuration

BF box/file A

Step 5. Case/Front Material

L laminate case/front A

C laminate case/veneer front A

W veneer case/front A

Step 6. Top

For box/file (BF) with laminate case/front (L)

03 3/8" laminate top A

04 3/8" veneer top A

For box/file (BF) with laminate case/veneer front (C)

03 3/8" laminate top A

04 3/8" veneer top A

For box/file (BF) with veneer case/front (W)

04 3/8" veneer top A

Step 7. Lock

L lock A

Prices for Steps 1-7.

	L03L	L04L	C03L	C04L	W04L
FF11A. 18 BF	$1699	1900	1900	2014	2598
FF11K. 18 BF	$1699	1940	1900	2014	2549

Step 8. Case Finish

Solid-Color Laminate

For laminate case/front (L) or laminate case/veneer front (C)

8Q	folkstone grey A	+$0
91	white A	+$0
98	studio white	+$0
CL	cool grey neutral A	+$0
LU	soft white A	+$0
WL	sandstone A	+$0
WN	warm grey neutral A	+$0

Linen Laminate

For laminate case/front (L) or laminate case/veneer front (C)

LBM	crisp linen	+$0
LBN	classic linen	+$0
LBP	casual linen	+$0

Mesh Laminate

For laminate case/front (L) or laminate case/veneer front (C)

LBK	pewter mesh	+$0
LBL	steel mesh	+$0

Linen Laminate

For laminate case/front (L) or laminate case/veneer front (C)

LBF	neutral twill	+$0
LBG	sarum twill	+$0
LBH	earthen twill	+$0
LBJ	graphite twill	+$0
LBQ	white twill	+$0

Wood-Grain Laminate

For laminate case/front (L) or laminate case/veneer front (C)

HM	natural maple A	+$0
HP	light anigre A	+$0
LBA	clear on ash	+$0
LBR	phantom ecru	+$0
LBS	phantom cocoa	+$0
LBU	medium matte walnut	+$0
LBV	warm grey teak	+$0
LBB	oak on ash	+$0
LBC	walnut on ash	+$0
LBD	dark brown walnut	+$0
LBE	medium red walnut	+$0
76	light brown walnut A	+$0
HX	aged cherry A	+$0
HY	walnut on cherry A	+$0

Wood Veneer

For veneer case/front (W)

2U	light brown walnut A	+$0
40	dark brown walnut A	+$0
ED	aged cherry A	+$0
EK	medium red walnut A	+$0
EW	medium matte walnut A	+$0
ET	clear on ash A	+$0
EU	oak on ash A	+$0
EV	walnut on ash A	+$0
UL	natural maple A	+$0
UX	walnut on cherry A	+$0

Step 9. Front Finish

Solid-Color Laminate

For laminate case/front (L)

8Q	folkstone grey A	+$0
91	white A	+$0
98	studio white	+$0
CL	cool grey neutral A	+$0
LU	soft white A	+$0
WL	sandstone A	+$0
WN	warm grey neutral A	+$0

Linen Laminate

For laminate case/front (L)

LBM	crisp linen	+$0
LBN	classic linen	+$0
LBP	casual linen	+$0

Mesh Laminate

For laminate case/front (L)

LBK	pewter mesh	+$0
LBL	steel mesh	+$0

Twill Laminate

For laminate case/front (L)

LBF	neutral twill	+$0
LBG	sarum twill	+$0
LBH	earthen twill	+$0
LBJ	graphite twill	+$0
LBQ	white twill	+$0

Wood-Grain Laminate

For laminate case/front (L)

HM	natural maple A	+$0
HP	light anigre A	+$0
LBA	clear on ash	+$0
LBR	phantom ecru	+$0
LBS	phantom cocoa	+$0
LBU	medium matte walnut	+$0
LBV	warm grey teak	+$0
LBB	oak on ash	+$0
LBC	walnut on ash	+$0
LBD	dark brown walnut	+$0
LBE	medium red walnut	+$0
76	light brown walnut A	+$0
HX	aged cherry A	+$0
HY	walnut on cherry A	+$0

Wood Veneer

For laminate case/veneer front (C) or veneer case/front (W)

2U	light brown walnut A	+$0
40	dark brown walnut A	+$0
ED	aged cherry A	+$0
EK	medium red walnut A	+$0
EW	medium matte walnut A	+$0
ET	clear on ash A	+$0
EU	oak on ash A	+$0
EV	walnut on ash A	+$0
UL	natural maple A	+$0
UX	walnut on cherry A	+$0

Step 10. Top Finish

Solid-Color Laminate

For 3/8" laminate top (03)

8Q	folkstone grey A	+$0
91	white A	+$0
98	studio white	+$0
CL	cool grey neutral A	+$0
LU	soft white A	+$0
WL	sandstone A	+$0
WN	warm grey neutral A	+$0

Linen Laminate

For 3/8" laminate top (03)

LBM	crisp linen	+$0
LBN	classic linen	+$0
LBP	casual linen	+$0

Mesh Laminate

For 3/8" laminate top (03)

LBK	pewter mesh	+$0
LBL	steel mesh	+$0

Twill Laminate

For 3/8" laminate top (03)

LBF	neutral twill	+$0
LBG	sarum twill	+$0
LBH	earthen twill	+$0
LBJ	graphite twill	+$0
LBQ	white twill	+$0

Wood-Grain Laminate

For 3/8" laminate top (03)

HM	natural maple A	+$0
HP	light anigre A	+$0
LBA	clear on ash	+$0
LBB	oak on ash	+$0
LBC	walnut on ash	+$0
LBD	dark brown walnut	+$0
LBR	phantom ecru	+$0
LBS	phantom cocoa	+$0
LBU	medium matte walnut	+$0
LBV	warm grey teak	+$0
LBE	medium red walnut	+$0
76	light brown walnut A	+$0
HX	aged cherry A	+$0
HY	walnut on cherry A	+$0

Wood Veneer

For 3/8" veneer top (04)

2U	light brown walnut A	+$0
40	dark brown walnut A	+$0
ED	aged cherry A	+$0
EK	medium red walnut A	+$0
EW	medium matte walnut A	+$0
ET	clear on ash A	+$0
EU	oak on ash A	+$0
EV	walnut on ash A	+$0
UL	natural maple A	+$0
UX	walnut on cherry A	+$0

Step 11. Pull Finish		
For arc pull (A.)		
NH	brushed nickel A	+$0
NK	black nickel A	+$0
Metallic Paint		
For bar pull (K.)		
CN	metallic champagne A	+$0
MS	metallic silver A	+$0
Sand Texture Paint		
For bar pull (K.)		
BK	black A	+$0
79	green apple A	+$15
MY3	yellow oxide A	+$15
RO	red A	+$15
TRQ	turquoise A	+$15
Smooth Paint		
For bar pull (K.)		
8Q	folkstone grey A	+$0
91	white A	+$0
98	studio white A	+$0
G1	graphite A	+$0
WL	sandstone A	+$0
Step 12. Lock Option		
KA	keyed alike A	-$10
KC	keyed differently, chrome A	+$0
KD	keyed differently, black A	+$0

Pedestal Cushion Top FF893.

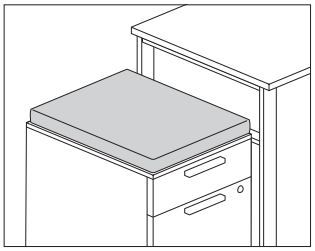

Product Information

Description

This cushion attaches to the top of a wood freestanding or mobile pedestal to provide temporary guest seating. Attachment hardware included.

Notes

Pedestal cushion accepts Customer's Own Material (COM). Yardage is estimated for nondirectional, 54″-wide fabrics. Order 1/2 yard of fabric per cushion. For odd number of cushions, round up to next full yard. For information on multiple quantities or directional fabrics, contact COM Department. See Order Information in Appendices.

Dimensions

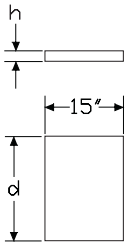

Specification Information

Step 1.

FF893. A

Step 2. Height

01 1″ high A
02 2″ high A

Step 3. Depth

18 18″ deep A
20 20″ deep A
24 24″ deep A
30 30″ deep A

Prices for Steps 1-3.

		18	20	24	30
FF893.	**01**	$153	222	226	238
	02	$252	264	268	288

Step 4. Fabric

See application chart and textiles list for fabric usage and numbers. First 2 digits of number indicate fabric line; remaining digit(s) indicate fabric color.

Price Category 1	+$0
Price Category 2	+$43
Price Category 3	+$60
Price Category 4	+$79
Price Category 7 A	+$144
Price Category 9	+$956
Price Category B	+$29
Price Category E	+$61
Price Category G	+$103
Price Category H	+$125

Wood Low Credenza, Open FFC700

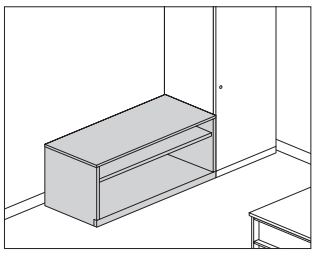

Product Information

Description

This credenza provides open storage and can be used freestanding or to support 1 end of a surface. It has a 3/8"-high or 1 1/4"-high laminate or veneer top with a laminate or veneer case. It is available with 4"-high architectural feet, 4"-high sleeveless architectural feet or a 2 1/4"-high base with 1" leveling glides.

Actual credenza widths are 29 7/8", 35 7/8", 41 7/8", 47 3/4", or 59 3/4"; actual depth is 19 7/8".

Notes

For additional product options, see Vary Easy Program in Appendices.

30"- and 36"-wide credenzas have no center divider and include 1 adjustable shelf. 42"-, 48"-, and 60"-wide credenzas have a center divider and include 2 adjustable shelves. Shelves adjust in 1 1/4" increments.

Credenza with 4"-high foot option (4) and 3/8" thin top can be used to support a Canvas wall-based frame. Order support bracket, low credenza-to-frame (FT292.) separately.

When using credenza to support 1 end of a surface, order 1 of the following products separately:

- Surface support, low credenza, adjustable height (FT299.)
- Surface support, low credenza, fixed height (FT298.)

Order optional wood credenza shelf (FF892.) separately.

To provide temporary guest seating on a credenza, order cushion top (FF891.) separately.

1 1/4" top (06 and 07) is not removable and cannot be used to support a Canvas wall-based frame. The 1 1/4" top will add 5/8" to overall height of unit.

Please note that on the 4" sleeveless architectural foot (5) glides will be more visible.

Dimensions

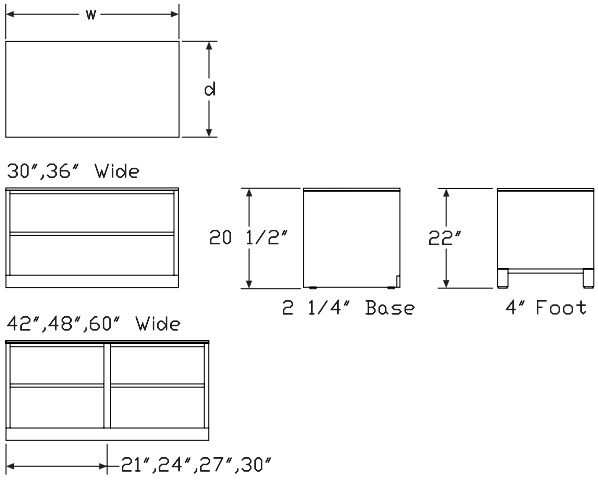

Specification Information

Step 1.

FFC700. A

Step 2. Width

30	30" wide A
36	36" wide A
42	42" wide A
48	48" wide A
60	60" wide A

Step 3. Depth

20	20" deep A

Step 4. Base/Foot Height

2	2¹/₄"-high base A
4	4"-high foot A
5	4" -high foot sleeveless A

Step 5. Case/Base Material

For 2¹/₄"-high base (2)

L	laminate A
C	laminate case/veneer base A
W	veneer A

For 4"-high foot (4) or 4" -high foot sleeveless (5)

L	laminate A

Step 6. Top

For laminate (L) or laminate case/veneer base (C)

NT	no top A
03	³/₈" laminate top A
04	³/₈" veneer top A
06	1¹/₄" laminate top A
07	1¹/₄" veneer top A

For veneer (W)

NT	no top A
04	³/₈" veneer top A
07	1¹/₄" veneer top A

Prices for Steps 1-6.

			2LNT	2L03	2L04	2L06	2L07	2CNT
FFC700.	**30**	**20**	$1368	1482	1710	1361	1600	1539
	36	**20**	$1465	1579	1808	1469	1697	1636
	42	**20**	$1852	1967	2196	1857	2086	2024
	48	**20**	$1944	2058	2287	1838	2067	2115
	60	**20**	$2156	2270	2555	2049	2335	2328

			2C03	2C04	2C06	2C07	2WNT	2W04
FFC700.	**30**	**20**	$1653	1882	1542	1772	2340	2966
	36	**20**	$1750	1978	1640	1868	2516	3304
	42	**20**	$2139	2366	2029	2256	3222	3579
	48	**20**	$2231	2458	2009	2238	3360	3745
	60	**20**	$2441	2726	2220	2506	3714	4129

			2W07	4LNT	4L03	4L04	4L06	4L07
FFC700.	**30**	**20**	$2851	1453	1568	1795	1457	1685
	36	**20**	$3189	1551	1664	1892	1554	1782
	42	**20**	$3465	1939	2052	2280	1942	2170
	48	**20**	$3516	2087	2201	2431	1981	2209
	60	**20**	$4014	2298	2412	2697	2192	2477

			5LNT	5L03	5L04	5L06	5L07
FFC700.	**30**	**20**	$1398	1512	1740	1402	1630
	36	**20**	$1496	1609	1837	1499	1727
	42	**20**	$1884	1997	2226	1887	2115
	48	**20**	$2032	2146	2375	1926	2154
	60	**20**	$2243	2357	2643	2137	2421

Step 7. Case Finish

For laminate (L) or laminate case/veneer base (C)

LBM	crisp linen A	+$0
LBN	classic linen A	+$0
LBP	casual linen A	+$0

For laminate (L) or laminate case/veneer base (C)

LBK	pewter mesh A	+$0
LBL	steel mesh A	+$0

Solid-Color Laminate

For laminate (L) or laminate case/veneer base (C)

8Q	folkstone grey A	+$0
91	white A	+$0
98	studio white A	+$0
CL	cool grey neutral A	+$0
LU	soft white A	+$0
WL	sandstone A	+$0
WN	warm grey neutral A	+$0

For laminate (L) or laminate case/veneer base (C)

LBF	neutral twill A	+$0
LBG	sarum twill A	+$0
LBH	earthen twill A	+$0
LBJ	graphite twill A	+$0
LBQ	white twill A	+$0

Wood-Grain Laminate

For laminate (L) or laminate case/veneer base (C)

HM	natural maple A	+$0
HP	light anigre A	+$0
LBA	clear on ash	+$0
LBB	oak on ash	+$0
LBC	walnut on ash	+$0
LBD	dark brown walnut	+$0
LBR	phantom ecru	+$0
LBS	phantom cocoa	+$0
LBU	medium matte walnut	+$0
LBV	warm grey teak	+$0
LBE	medium red walnut	+$0
76	light brown walnut A	+$0
HX	aged cherry A	+$0
HY	walnut on cherry A	+$0

Wood Veneer

For veneer (W)

2U	light brown walnut A	+$0
40	dark brown walnut A	+$0
ED	aged cherry A	+$0
EK	medium red walnut A	+$0
EW	medium matte walnut A	+$0
ET	clear on ash A	+$0
EU	oak on ash A	+$0
EV	walnut on ash A	+$0
UL	natural maple A	+$0
UX	walnut on cherry A	+$0

Step 8. Top Finish

For 3/8" laminate top (03) or 1 1/4" laminate top (06)

LBM	crisp linen A	+$0
LBN	classic linen A	+$0
LBP	casual linen A	+$0

For 3/8" laminate top (03) or 1 1/4" laminate top (06)

LBK	pewter mesh A	+$0
LBL	steel mesh A	+$0

Solid-Color Laminate

For 3/8" laminate top (03) or 1 1/4" laminate top (06)

8Q	folkstone grey A	+$0
91	white A	+$0
98	studio white A	+$0
CL	cool grey neutral A	+$0
LU	soft white A	+$0
WL	sandstone A	+$0
WN	warm grey neutral A	+$0

For 3/8" laminate top (03) or 1 1/4" laminate top (06)

LBF	neutral twill A	+$0
LBG	sarum twill A	+$0
LBH	earthen twill A	+$0
LBJ	graphite twill A	+$0
LBQ	white twill A	+$0

Wood-Grain Laminate

For 3/8" laminate top (03) or 1 1/4" laminate top (06)

HM	natural maple A	+$0
HP	light anigre A	+$0
LBA	clear on ash	+$0
LBB	oak on ash	+$0
LBC	walnut on ash	+$0
LBD	dark brown walnut	+$0
LBR	phantom ecru	+$0
LBS	phantom cocoa	+$0
LBU	medium matte walnut	+$0
LBV	warm grey teak	+$0
LBE	medium red walnut	+$0
76	light brown walnut A	+$0
HX	aged cherry A	+$0
HY	walnut on cherry A	+$0

Wood Veneer

For 3/8" veneer top (04) or 1 1/4" veneer top (07)

2U	light brown walnut A	+$0
40	dark brown walnut A	+$0
ED	aged cherry A	+$0
EK	medium red walnut A	+$0
EW	medium matte walnut A	+$0
ET	clear on ash A	+$0
EU	oak on ash A	+$0
EV	walnut on ash A	+$0
UL	natural maple A	+$0
UX	walnut on cherry A	+$0

Step 9. Base Finish

For laminate (L)

LBM	crisp linen A	+$0
LBN	classic linen A	+$0
LBP	casual linen A	+$0

For laminate (L)

LBK	pewter mesh A	+$0
LBL	steel mesh A	+$0

Solid-Color Laminate

For laminate (L)

8Q	folkstone grey A	+$0
91	white A	+$0
98	studio white A	+$0
CL	cool grey neutral A	+$0
LU	soft white A	+$0
WL	sandstone A	+$0
WN	warm grey neutral A	+$0

For laminate (L)

LBF	neutral twill A	+$0
LBG	sarum twill A	+$0
LBH	earthen twill A	+$0
LBJ	graphite twill A	+$0
LBQ	white twill A	+$0

Wood-Grain Laminate

For laminate (L)

HM	natural maple A	+$0
HP	light anigre A	+$0
LBA	clear on ash	+$0
LBB	oak on ash	+$0
LBC	walnut on ash	+$0
LBD	dark brown walnut	+$0
LBR	phantom ecru	+$0
LBS	phantom cocoa	+$0
LBU	medium matte walnut	+$0
LBV	warm grey teak	+$0
LBE	medium red walnut	+$0
76	light brown walnut A	+$0
HX	aged cherry A	+$0
HY	walnut on cherry A	+$0

Wood Veneer

For laminate case/veneer base (C) or veneer (W)

2U	light brown walnut A	+$0
40	dark brown walnut A	+$0
ED	aged cherry A	+$0
EK	medium red walnut A	+$0
EW	medium matte walnut A	+$0
ET	clear on ash A	+$0
EU	oak on ash A	+$0
EV	walnut on ash A	+$0
UL	natural maple A	+$0
UX	walnut on cherry A	+$0

Step 10. Foot Finish

For 4"-high foot (4) or 4" -high foot sleeveless (5)

Metallic Paint

CN	metallic champagne A	+$0
EH	metallic bronze A	+$0
MS	metallic silver A	+$0

Sand Texture Paint

8Q	folkstone grey A	+$0
91	white A	+$0
98	studio white A	+$0
BK	black A	+$0
CL	cool grey neutral A	+$0
G1	graphite A	+$0
WL	sandstone A	+$0
WN	warm grey neutral A	+$0

Wood Low Credenza, with Doors

FFC71A
FFC71K

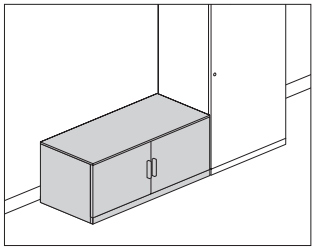

Product Information

Description

This credenza provides enclosed storage and can be used freestanding or to support 1 end of a surface. It has a 3/8"-high or 1 1/4"-high laminate or veneer top with a laminate or veneer case. It is available with 4"-high architectural feet, 4"-high sleeveless architectural feet or a 2 1/4"-high base with 1" leveling glides.

Actual credenza widths are 29 7/8", 35 7/8", or 41 7/8"; actual depth is 19 7/8".

Notes

For additional product options, see Vary Easy Program in Appendices.

Arc pull option (A.) conforms to guidelines of Americans with Disabilities Act (ADA).

Grain direction is vertical on veneer and wood-grain laminate fronts.

30"- and 36"-wide credenzas have no center divider and include 1 adjustable shelf. 42"-wide credenza has a center divider and includes 2 adjustable shelves. Shelves adjust in 1 1/4" increments.

Credenza with 4"-high foot option (4) and 3/8" thin top can be used to support a Canvas wall-based frame. Order support bracket, low credenza-to-frame (FT292.) separately.

When using credenza to support 1 end of a surface, order 1 of the following products separately:

- Surface support, low credenza, adjustable height (FT299.)
- Surface support, low credenza, fixed height (FT298.)

To cover adjacent credenzas with a single top, specify credenzas with no top option (NT) and order credenza top (FF890.) separately.

1 1/4" top (06 and 07) is not removable and cannot be used to support a Canvas wall-based frame. The 1 1/4" top will add 5/8" to overall height of unit.

Please note that on the 4" sleeveless architectural foot (5) glides will be more visible.

Order optional wood credenza shelf (FF892.) separately.

To provide temporary guest seating on a credenza, order cushion top (FF891.) separately.

For keyed-alike locks, see Keyed-Alike Information in Appendices.

Dimensions

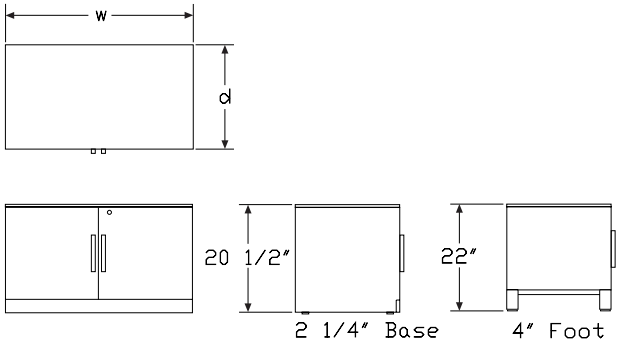

Wood Low Credenza, with Doors

continued

Specification Information

Step 1.

FFC71 A

Step 2. Pull Type

A. arc pull A
K. bar pull A

Step 3. Width

30 30" wide A
36 36" wide A
42 42" wide A

Step 4. Depth

20 20" deep A

Step 5. Base/Foot Height

2 2 1/4"-high base A
4 4"-high foot A
5 4" -high foot sleeveless A

Step 6. Case/Door Material

For 2 1/4"-high base (2)

L laminate A
C laminate case/veneer door A
W veneer A

For 4"-high foot (4) or 4" -high foot sleeveless (5)

L laminate A
C laminate case/veneer door A

Step 7. Top

For laminate (L) or laminate case/veneer door (C)

NT no top A
03 3/8" laminate top A
04 3/8" veneer top A
06 1 1/4" laminate top A
07 1 1/4" veneer top A

For veneer (W)

NT no top A
04 3/8" veneer top A
07 1 1/4" veneer top A

Prices for Steps 1-7.

		2LNT	2L03	2L04	2L06	2L07	2CNT
FFC71A.	**30 20**	$1754	1829	2092	1722	1983	2125
	36 20	$1912	2064	2290	1955	2181	2362
	42 20	$2149	2215	2489	2108	2380	2601

		2C03	2C04	2C06	2C07	2WNT	2W04
FFC71A.	**30 20**	$2240	2465	2130	2356	2794	3132
	36 20	$2477	2703	2366	2594	3126	3466
	42 20	$2714	2939	2604	2830	3458	3722

		2W07	4LNT	4L03	4L04	4L06	4L07
FFC71A.	**30 20**	$3023	1837	1912	2178	1843	2068
	36 20	$3357	2035	2105	2377	1998	2267
	42 20	$3690	2234	2348	2574	2239	2464

		4CNT	4C03	4C04	4C06	4C07	5LNT
FFC71A.	**30 20**	$2207	2321	2547	2212	2437	1782
	36 20	$2444	2559	2785	2450	2676	1981
	42 20	$2684	2796	3022	2687	2913	2179

		5L03	5L04	5L06	5L07	5CNT	5C03
FFC71A.	**30 20**	$1896	2123	1786	2014	2152	2267
	36 20	$2094	2321	1985	2212	2390	2503
	42 20	$2292	2519	2183	2410	2628	2742

		5C04	5C06	5C07
FFC71A.	**30 20**	$2493	2158	2384
	36 20	$2729	2394	2620
	42 20	$2967	2632	2858

		2LNT	2L03	2L04	2L06	2L07	2CNT
FFC71K.	**30 20**	$1719	1829	2050	1722	1943	2082
	36 20	$1912	2023	2244	1915	2137	2314
	42 20	$2105	2215	2439	2108	2332	2549

		2C03	2C04	2C06	2C07	2WNT	2W04
FFC71K.	**30 20**	$2194	2415	2087	2308	2738	3069
	36 20	$2427	2649	2318	2542	3063	3396
	42 20	$2659	2880	2552	2773	3388	3722

		2W07	4LNT	4L03	4L04	4L06	4L07
FFC71K.	**30 20**	$2962	1800	1912	2134	1805	2027
	36 20	$3289	1994	2105	2329	1998	2221
	42 20	$3615	2189	2521	2521	2193	2414

Wood Low Credenza, with Doors

continued

		4CNT	4C03	4C04	4C06	4C07	5LNT
FFC71K.	**30 20**	$2162	2274	2495	2167	2388	1746
	36 20	$2394	2507	2729	2400	2621	1941
	42 20	$2630	2740	2961	2633	2854	2135

		5L03	5L04	5L06	5L07	5CNT	5C03
FFC71K.	**30 20**	$1858	2080	1750	1973	2108	2221
	36 20	$2052	2274	1945	2167	2342	2453
	42 20	$2246	2468	2139	2361	2575	2686

		5C04	5C06	5C07
FFC71K.	**30 20**	$2443	2114	2336
	36 20	$2674	2346	2567
	42 20	$2907	2579	2800

Step 8. Case Finish

For laminate (L) or laminate case/veneer door (C)

LBM	crisp linen A	+$0
LBN	classic linen A	+$0
LBP	casual linen A	+$0

For laminate (L) or laminate case/veneer door (C)

LBK	pewter mesh A	+$0
LBL	steel mesh A	+$0

Solid-Color Laminate

For laminate (L) or laminate case/veneer door (C)

8Q	folkstone grey A	+$0
91	white A	+$0
98	studio white A	+$0
CL	cool grey neutral A	+$0
LU	soft white A	+$0
WL	sandstone A	+$0
WN	warm grey neutral A	+$0

For laminate (L) or laminate case/veneer door (C)

LBF	neutral twill A	+$0
LBG	sarum twill A	+$0
LBH	earthen twill A	+$0
LBJ	graphite twill A	+$0
LBQ	white twill A	+$0

Wood-Grain Laminate

For laminate (L) or laminate case/veneer door (C)

HM	natural maple A	+$0
HP	light anigre A	+$0
LBA	clear on ash	+$0
LBB	oak on ash	+$0
LBC	walnut on ash	+$0
LBD	dark brown walnut	+$0
LBR	phantom ecru	+$0
LBS	phantom cocoa	+$0
LBU	medium matte walnut	+$0
LBV	warm grey teak	+$0
LBE	medium red walnut	+$0
76	light brown walnut A	+$0
HX	aged cherry A	+$0
HY	walnut on cherry A	+$0

Wood Veneer

For veneer (W)

2U	light brown walnut A	+$0
40	dark brown walnut A	+$0
ED	aged cherry A	+$0
EK	medium red walnut A	+$0
EW	medium matte walnut A	+$0
ET	clear on ash A	+$0
EU	oak on ash A	+$0
EV	walnut on ash A	+$0
UL	natural maple A	+$0
UX	walnut on cherry A	+$0

Step 9. Door Finish

For laminate (L)

LBM	crisp linen A	+$0
LBN	classic linen A	+$0
LBP	casual linen A	+$0

For laminate (L)

LBK	pewter mesh A	+$0
LBL	steel mesh A	+$0

Solid-Color Laminate

For laminate (L)

8Q	folkstone grey A	+$0
91	white A	+$0
98	studio white A	+$0
CL	cool grey neutral A	+$0
LU	soft white A	+$0
WL	sandstone A	+$0
WN	warm grey neutral A	+$0

For laminate (L)

LBF	neutral twill A	+$0
LBG	sarum twill A	+$0
LBH	earthen twill A	+$0
LBJ	graphite twill A	+$0
LBQ	white twill A	+$0

Wood-Grain Laminate

For laminate (L)

HM	natural maple A	+$0
HP	light anigre A	+$0
LBA	clear on ash	+$0
LBB	oak on ash	+$0
LBC	walnut on ash	+$0
LBD	dark brown walnut	+$0
LBR	phantom ecru	+$0
LBS	phantom cocoa	+$0
LBU	medium matte walnut	+$0
LBV	warm grey teak	+$0
LBE	medium red walnut	+$0
76	light brown walnut A	+$0
HX	aged cherry A	+$0
HY	walnut on cherry A	+$0

Wood Veneer

For laminate case/veneer door (C) or veneer (W)

2U	light brown walnut A	+$0
40	dark brown walnut A	+$0
ED	aged cherry A	+$0
EK	medium red walnut A	+$0
EW	medium matte walnut A	+$0
ET	clear on ash A	+$0
EU	oak on ash A	+$0
EV	walnut on ash A	+$0
UL	natural maple A	+$0
UX	walnut on cherry A	+$0

Step 10. Top Finish

For 3/8" laminate top (03) or 1 1/4" laminate top (06)

LBM	crisp linen A	+$0
LBN	classic linen A	+$0
LBP	casual linen A	+$0

For 3/8" laminate top (03) or 1 1/4" laminate top (06)

LBK	pewter mesh A	+$0
LBL	steel mesh A	+$0

Solid-Color Laminate

For 3/8" laminate top (03) or 1 1/4" laminate top (06)

8Q	folkstone grey A	+$0
91	white A	+$0
98	studio white A	+$0
CL	cool grey neutral A	+$0
LU	soft white A	+$0
WL	sandstone A	+$0
WN	warm grey neutral A	+$0

For 3/8" laminate top (03) or 1 1/4" laminate top (06)

LBF	neutral twill A	+$0
LBG	sarum twill A	+$0
LBH	earthen twill A	+$0
LBJ	graphite twill A	+$0
LBQ	white twill A	+$0

Wood-Grain Laminate

For 3/8" laminate top (03) or 1 1/4" laminate top (06)

HM	natural maple A	+$0
HP	light anigre A	+$0
LBA	clear on ash	+$0
LBB	oak on ash	+$0
LBC	walnut on ash	+$0
LBD	dark brown walnut	+$0
LBR	phantom ecru	+$0
LBS	phantom cocoa	+$0
LBU	medium matte walnut	+$0
LBV	warm grey teak	+$0
LBE	medium red walnut	+$0
76	light brown walnut A	+$0
HX	aged cherry A	+$0
HY	walnut on cherry A	+$0

Wood Veneer
For 3/8" veneer top (04) or 1 1/4" veneer top (07)

2U	light brown walnut A	+$0
40	dark brown walnut A	+$0
ED	aged cherry A	+$0
EK	medium red walnut A	+$0
EW	medium matte walnut A	+$0
ET	clear on ash A	+$0
EU	oak on ash A	+$0
EV	walnut on ash A	+$0
UL	natural maple A	+$0
UX	walnut on cherry A	+$0

Step 11. Foot Finish
For 4"-high foot (4) or 4" -high foot sleeveless (5)

Sand Texture Paint

8Q	folkstone grey A	+$0
91	white A	+$0
98	studio white A	+$0
CL	cool grey neutral A	+$0
G1	graphite A	+$0
WL	sandstone A	+$0
WN	warm grey neutral A	+$0

Metallic Paint

CN	metallic champagne A	+$0
EH	metallic bronze A	+$0
MS	metallic silver A	+$0

Step 12. Pull Finish

For arc pull (A.)

NH	brushed nickel A	+$0
NK	black nickel A	+$0

Metallic Paint
For bar pull (K.)

CN	metallic champagne A	+$0
MS	metallic silver A	+$0

Sand Texture Paint
For bar pull (K.)

BK	black A	+$0
79	green apple A	+$15
MY3	yellow oxide A	+$15
RO	red A	+$15
TRQ	turquoise A	+$15

Smooth Paint
For bar pull (K.)

8Q	folkstone grey A	+$0
91	white A	+$0
98	studio white A	+$0
G1	graphite A	+$0
WL	sandstone A	+$0

Step 13. Lock Option

KA	keyed alike A	-$10
KC	keyed differently, chrome A	+$0
KD	keyed differently, black A	+$0

Wood Low Credenza, with Drawers

FFC72A
FFC72K

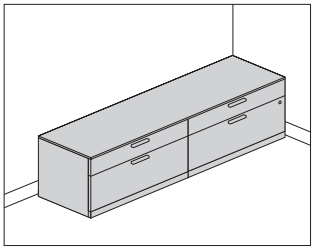

Product Information

Description

This credenza provides enclosed filing and storage and can be used freestanding or to support 1 end of a surface. It has a 3/8"-high or 1 1/4"-high laminate or veneer top with a laminate or veneer case. It is available with 4"-high architectural feet, 4"-high sleeveless architectural feet or a 2 1/4"-high base with 1" leveling glides and has a positive interlock system that permits only 1 drawer to open at a time. Drawers have full-extension ball-bearing slides. The file drawer(s) accommodate side-to-side and front-to-back filing of letter-, legal, and A4-size hanging files.

Actual credenza widths are 29 7/8", 35 7/8", 41 7/8", 59 3/4", or 71 3/4"; actual depth is 19 7/8".

Notes

For additional product options, see Vary Easy Program in Appendices.

Arc pull option (A.) conforms to guidelines of Americans with Disabilities Act (ADA).

Grain direction is vertical on veneer and wood-grain laminate fronts.

30"-, 36"-, and 42"-wide credenzas have 1 box drawer and 1 file drawer. 60"-and 72"-wide credenzas have 2 box drawers and 2 file drawers.

Credenza with 4"-high foot option (4) and 3/8" thin top can be used to support a Canvas wall-based frame. Order support bracket, low credenza-to-frame (FT292.) separately.

When using credenza to support 1 end of a surface, order 1 of the following products separately:

- Surface support, low credenza, adjustable height (FT299.)
- Surface support, low credenza, fixed height (FT298.)

1 1/4" top (06 and 07) is not removable and cannot be used to support a Canvas wall-based frame. The 1 1/4" top will add 5/8" to overall height of unit.

Please note that on the 4" sleeveless architectural foot (5) glides will be more visible.

To cover adjacent credenzas with a single top, specify credenzas with no top option (NT) and order credenza top (FF890.) separately.

To provide temporary guest seating on a credenza, order cushion top (FF891.) separately.

For keyed-alike locks, see Keyed-Alike Information in Appendices.

Dimensions

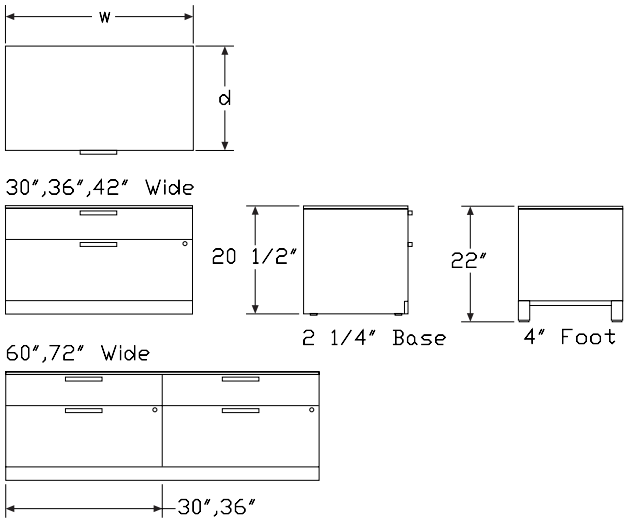

Wood Low Credenza, with Drawers *continued*

Specification Information

Step 1.

FFC72 A

Step 2. Pull Type

A. arc pull A
K. bar pull A

Step 3. Width

30 30" wide A
36 36" wide A
42 42" wide A
60 60" wide A
72 72" wide A

Step 4. Depth

20 20" deep A

Step 5. Base/Foot Height

2 2¹/₄"-high base A
4 4"-high foot A
5 4" -high foot sleeveless A

Step 6. Configuration

For 30" wide (30), 36" wide (36), or 42" wide (42)

BF box/file A

For 60" wide (60) or 72" wide (72)

BF box/file A

Step 7. Case/Front Material

For 2¹/₄"-high base (2)

L laminate case/front A
C laminate case/veneer front A
W veneer case/front A

For 4"-high foot (4) or 4" -high foot sleeveless (5)

L laminate case/front A
C laminate case/veneer front A

Step 8. Top

For laminate case/front (L) or laminate case/veneer front (C)

NT no top A
03 ³/₈" laminate top A
04 ³/₈" veneer top A
06 1¹/₄" laminate top A
07 1¹/₄" veneer top A

For veneer case/front (W)

NT no top A
04 ³/₈" veneer top A
07 1¹/₄" veneer top A

Prices for Steps 1-8.

			2BFLNT	2BFL03	2BFL04	2BFL06	2BFL07	2BFCNT
FFC72A.	**30**	**20**	$2041	2151	2422	2044	2312	2521
	36	**20**	$2317	2429	2705	2321	2596	2861
	42	**20**	$2622	2735	3017	2626	2908	3234
	60	**20**	$4088	4257	4540	3957	4322	4938
	72	**20**	$4694	4806	5032	4588	4814	5541

			2BFC03	2BFC04	2BFC06	2BFC07	2BFWNT	2BFW04
FFC72A.	**30**	**20**	$2635	2861	2526	2696	3085	3424
	36	**20**	$2974	3200	2864	3091	3526	3865
	42	**20**	$3348	3573	3238	3464	4011	4351
	60	**20**	$5109	5391	4890	5172	6107	6372
	72	**20**	$5768	6107	5550	5888	6888	7342

			2BFW07	4BFLNT	4BFL03	4BFL04	4BFL06	4BFL07
FFC72A.	**30**	**20**	$3315	2167	2235	2507	2171	2397
	36	**20**	$3756	2451	2512	2791	2405	2681
	42	**20**	$4241	2705	2816	3100	2709	2991
	60	**20**	$6285	4228	4309	4683	4180	4463
	72	**20**	$7124	4834	4948	5173	4728	4955

			4BFCNT	4BFC03	4BFC04	4BFC06	4BFC07	5BFLNT
FFC72A.	**30**	**20**	$2603	2717	2943	2608	2833	2112
	36	**20**	$2943	3056	3282	2947	3172	2311
	42	**20**	$3317	3431	3657	3322	3548	2708
	60	**20**	$5075	5244	5529	5026	5308	4174
	72	**20**	$5677	5904	6243	5686	6025	4780

			5BFL03	5BFL04	5BFL06	5BFL07	5BFCNT	5BFC03
FFC72A.	**30**	**20**	$2225	2116	2116	2344	2548	2662
	36	**20**	$2424	2650	2314	2541	2889	3002
	42	**20**	$2820	3046	2711	2936	3262	3376

	60 20	$4344	4626	4125	4407	5021	5190
	72 20	$4894	5120	4673	4901	5623	5851

					5BFC04	**5BFC06**	**5BFC07**
FFC72A.	**30 20**				$2889	2553	2780
	36 20				$3228	2892	3119
	42 20				$3601	3266	3492
	60 20				$5474	4971	5255
	72 20				$6189	5632	5970

		2BFLNT	**2BFL03**	**2BFL04**	**2BFL06**	**2BFL07**	**2BFCNT**
FFC72K.	**30 20**	$2041	2151	2373	2044	2265	2470
	36 20	$2317	2429	2651	2321	2544	2803
	42 20	$2622	2735	2956	2626	2849	3169
	60 20	$4005	4171	4449	3957	4234	4838
	72 20	$4599	4709	4930	4495	4716	5429

		2BFC03	**2BFC04**	**2BFC06**	**2BFC07**	**2BFWNT**	**2BFW04**
FFC72K.	**30 20**	$2582	2803	2475	2696	3022	3355
	36 20	$2913	3136	2806	3028	3455	3787
	42 20	$3280	3501	3173	3394	3929	4263
	60 20	$5006	5282	4791	5068	5984	6372
	72 20	$5651	5984	5437	5769	6748	7194

		2BFW07	**4BFLNT**	**4BFL03**	**4BFL04**	**4BFL06**	**4BFL07**
FFC72K.	**30 20**	$3248	2124	2235	2456	2128	2349
	36 20	$3680	2401	2512	2735	2405	2626
	42 20	$4156	2705	2816	3038	2709	2931
	60 20	$6157	4143	4309	4588	4095	4373
	72 20	$6980	4736	4847	5069	4632	4855

		4BFCNT	**4BFC03**	**4BFC04**	**4BFC06**	**4BFC07**	**5BFLNT**
FFC72K.	**30 20**	$2551	2662	2883	2555	2776	2069
	36 20	$2883	2994	3215	2887	3108	2264
	42 20	$3250	3362	3583	3255	3476	2653
	60 20	$4973	5138	5417	4924	5201	4090
	72 20	$5563	5785	6117	5571	5903	4683

		5BFL03	**5BFL04**	**5BFL06**	**5BFL07**	**5BFCNT**	**5BFC03**
FFC72K.	**30 20**	$2180	2073	2073	2296	2496	2608
	36 20	$2375	2596	2267	2489	2831	2942
	42 20	$2763	2984	2656	2877	3196	3307
	60 20	$4256	4532	4042	4318	4919	4952
	72 20	$4795	5016	4579	4802	5509	5732

					5BFC04	**5BFC06**	**5BFC07**
FFC72K.	**30 20**				$2831	2501	2723
	36 20				$3163	2834	3056
	42 20				$3528	3200	3421
	60 20				$5229	4871	5148
	72 20				$6064	5518	5849

Step 9. Case Finish

For 30" wide (30), 36" wide (36), 42" wide (42), or 60" wide (60) with laminate case/front (L), or laminate case/veneer front (C)

LBM	crisp linen A	+$0
LBN	classic linen A	+$0
LBP	casual linen A	+$0

For 30" wide (30), 36" wide (36), 42" wide (42), or 60" wide (60) with laminate case/front (L), or laminate case/veneer front (C)

LBK	pewter mesh A	+$0
LBL	steel mesh A	+$0

Solid-Color Laminate

For 30" wide (30), 36" wide (36), 42" wide (42), or 60" wide (60) with laminate case/front (L), or laminate case/veneer front (C)

8Q	folkstone grey A	+$0
91	white A	+$0
98	studio white A	+$0
CL	cool grey neutral A	+$0
LU	soft white A	+$0
WL	sandstone A	+$0
WN	warm grey neutral A	+$0

For 30" wide (30), 36" wide (36), 42" wide (42), or 60" wide (60) with laminate case/front (L), or laminate case/veneer front (C)

LBF	neutral twill A	+$0
LBG	sarum twill A	+$0
LBH	earthen twill A	+$0
LBJ	graphite twill A	+$0
LBQ	white twill A	+$0

Wood-Grain Laminate

For 30" wide (30), 36" wide (36), 42" wide (42), or 60" wide (60) with laminate case/front (L), or laminate case/veneer front (C)

LA	light ash A	+$0
LBC	walnut on ash A	+$0
LBE	medium red walnut A	+$0
HM	natural maple A	+$0
HP	light anigre A	+$0
LBA	clear on ash A	+$0
LBR	phantom ecru A	+$0
LBS	phantom cocoa A	+$0
LBU	medium matte walnut A	+$0
LBV	warm grey teak A	+$0
LBB	oak on ash A	+$0
LBD	dark brown walnut A	+$0
76	light brown walnut A	+$0
HX	aged cherry A	+$0
HY	walnut on cherry A	+$0

For 72" wide (72) with laminate case/front (L), or laminate case/veneer front (C)

LBM	crisp linen A	+$0
LBN	classic linen A	+$0
LBP	casual linen A	+$0

For 72" wide (72) with laminate case/front (L), or laminate case/veneer front (C)

LBK	pewter mesh A	+$0
LBL	steel mesh A	+$0

Solid-Color Laminate

For 72" wide (72) with laminate case/front (L), or laminate case/veneer front (C)

8Q	folkstone grey A	+$0
91	white A	+$0
98	studio white A	+$0
CL	cool grey neutral A	+$0
LU	soft white A	+$0
WL	sandstone A	+$0
WN	warm grey neutral A	+$0

Wood Veneer

For veneer case/front (W)

2U	light brown walnut A	+$0
40	dark brown walnut A	+$0
ED	aged cherry A	+$0
EK	medium red walnut A	+$0
EW	medium matte walnut A	+$0
ET	clear on ash A	+$0
EU	oak on ash A	+$0
EV	walnut on ash A	+$0
UL	natural maple A	+$0
UX	walnut on cherry A	+$0

Step 10. Front Finish

For laminate case/front (L)

LBM	crisp linen A	+$0
LBN	classic linen A	+$0
LBP	casual linen A	+$0

For laminate case/front (L)

LBK	pewter mesh A	+$0
LBL	steel mesh A	+$0

Solid-Color Laminate

For laminate case/front (L)

8Q	folkstone grey A	+$0
91	white A	+$0
98	studio white A	+$0
CL	cool grey neutral A	+$0
LU	soft white A	+$0
WL	sandstone A	+$0
WN	warm grey neutral A	+$0

For laminate case/front (L)

LBF	neutral twill A	+$0
LBG	sarum twill A	+$0
LBH	earthen twill A	+$0
LBJ	graphite twill A	+$0
LBQ	white twill A	+$0

Wood Low Credenza, with Drawers *continued*

Wood-Grain Laminate

For laminate case/front (L)

LA	light ash A	+$0
LBC	walnut on ash A	+$0
LBE	medium red walnut A	+$0
HM	natural maple A	+$0
HP	light anigre A	+$0
LBA	clear on ash A	+$0
LBR	phantom ecru A	+$0
LBS	phantom cocoa A	+$0
LBU	medium matte walnut A	+$0
LBV	warm grey teak A	+$0
LBB	oak on ash A	+$0
LBD	dark brown walnut A	+$0
76	light brown walnut A	+$0
HX	aged cherry A	+$0
HY	walnut on cherry A	+$0

Wood Veneer

For laminate case/veneer front (C) or veneer case/front (W)

2U	light brown walnut A	+$0
40	dark brown walnut A	+$0
ED	aged cherry A	+$0
EK	medium red walnut A	+$0
EW	medium matte walnut A	+$0
ET	clear on ash A	+$0
EU	oak on ash A	+$0
EV	walnut on ash A	+$0
UL	natural maple A	+$0
UX	walnut on cherry A	+$0

Step 11. Top Finish

For 3/8" laminate top (03) or 1 1/4" laminate top (06)

LBM	crisp linen A	+$0
LBN	classic linen A	+$0
LBP	casual linen A	+$0

For 3/8" laminate top (03) or 1 1/4" laminate top (06)

LBK	pewter mesh A	+$0
LBL	steel mesh A	+$0

Solid-Color Laminate

For 3/8" laminate top (03) or 1 1/4" laminate top (06)

8Q	folkstone grey A	+$0
91	white A	+$0
98	studio white A	+$0
CL	cool grey neutral A	+$0
LU	soft white A	+$0
WL	sandstone A	+$0
WN	warm grey neutral A	+$0

For 3/8" laminate top (03) or 1 1/4" laminate top (06)

LBF	neutral twill A	+$0
LBG	sarum twill A	+$0
LBH	earthen twill A	+$0
LBJ	graphite twill A	+$0
LBQ	white twill A	+$0

Wood-Grain Laminate

For 3/8" laminate top (03) or 1 1/4" laminate top (06)

LBC	walnut on ash A	+$0
LBE	medium red walnut A	+$0
HM	natural maple A	+$0
HP	light anigre A	+$0
LBA	clear on ash A	+$0
LBR	phantom ecru A	+$0
LBS	phantom cocoa A	+$0
LBU	medium matte walnut A	+$0
LBV	warm grey teak A	+$0
LBB	oak on ash A	+$0
LBD	dark brown walnut A	+$0
76	light brown walnut A	+$0
HX	aged cherry A	+$0
HY	walnut on cherry A	+$0

Wood Veneer

For 3/8" veneer top (04) or 1 1/4" veneer top (07)

2U	light brown walnut A	+$0
40	dark brown walnut A	+$0
ED	aged cherry A	+$0
EK	medium red walnut A	+$0
EW	medium matte walnut A	+$0
ET	clear on ash A	+$0
EU	oak on ash A	+$0
EV	walnut on ash A	+$0
UL	natural maple A	+$0
UX	walnut on cherry A	+$0

Wood Low Credenza, with Drawers *continued*

Step 12. Foot Finish		
For 4"-high foot (4) or 4" -high foot sleeveless (5)		
Sand Texture Paint		
8Q	folkstone grey A	+$0
91	white A	+$0
98	studio white A	+$0
BK	black A	+$0
CL	cool grey neutral A	+$0
G1	graphite A	+$0
WL	sandstone A	+$0
WN	warm grey neutral A	+$0
Metallic Paint		
CN	metallic champagne A	+$0
EH	metallic bronze A	+$0
MS	metallic silver A	+$0

Step 13. Pull Finish		
For arc pull (A.)		
NH	brushed nickel A	+$0
NK	black nickel A	+$0
Metallic Paint		
For bar pull (K.)		
CN	metallic champagne A	+$0
MS	metallic silver A	+$0
Sand Texture Paint		
For bar pull (K.)		
BK	black A	+$0
79	green apple A	+$15
MY3	yellow oxide A	+$15
RO	red A	+$15
TRQ	turquoise A	+$15
Smooth Paint		
For bar pull (K.)		
8Q	folkstone grey A	+$0
91	white A	+$0
98	studio white A	+$0
G1	graphite A	+$0
WL	sandstone A	+$0

Step 14. Counterweight		
NO	no counterweight A	+$0
CB	counterweight A	+$70

Step 15. Lock Option		
KA	keyed alike A	-$10
KC	keyed differently, chrome A	+$0
KD	keyed differently, black A	+$0

Wood Low Credenza, Open with Drawers

FFC73A
FFC73K

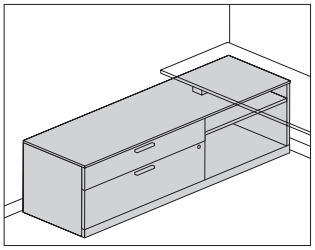

Product Information

Description

This credenza provides drawer storage on 1 side with open storage on the other side and can be used freestanding or to support 1 end of a surface. It has a 3/8"-high or 1 1/4"-high laminate or veneer top with a laminate or veneer case. It is available with 4"-high architectural feet, 4"-high sleeveless architectural feet or a 2 1/4"-high base with 1" leveling glides and has a positive interlock system that permits only 1 drawer to open at a time. Drawers have full-extension ball-bearing slides. The file drawer accommodates side-to-side and front-to-back filing of letter-, legal, and A4-size hanging files.

Actual credenza widths are 47 3/4", 59 3/4" or 71 3/4"; actual depth is 19 7/8".

Notes

For additional product options, see Vary Easy Program in Appendices.

Arc pull option (A.) conforms to guidelines of Americans with Disabilities Act (ADA).

Grain direction is vertical on veneer and wood-grain laminate fronts.

Open side of Credenza includes 1 adjustable shelf that adjusts in 1 1/4" increments.

Credenza with 4"-high foot option (4) and 3/8" thin top can be used to support a Canvas wall-based frame. Order support bracket, low credenza-to-frame (FT292.) separately.

When using credenza to support 1 end of a surface, order 1 of the following products separately:

- Surface support, low credenza, adjustable height (FT299.)
- Surface support, low credenza, fixed height (FT298.)

To cover adjacent credenzas with a single top, specify credenzas with no top option (NT) and order credenza top (FF890.) separately.

1 1/4" top (06 and 07) is not removable and cannot be used to support a Canvas wall-based frame. The 1 1/4" top will add 5/8" to overall height of unit.

Please note that on the 4" sleeveless architectural foot (5) glides will be more visible.

Order optional wood credenza shelf (FF892.) separately.

To provide temporary guest seating on a credenza, order cushion top (FF891.) separately.

For keyed-alike locks, see Keyed-Alike Information in Appendices.

Dimensions

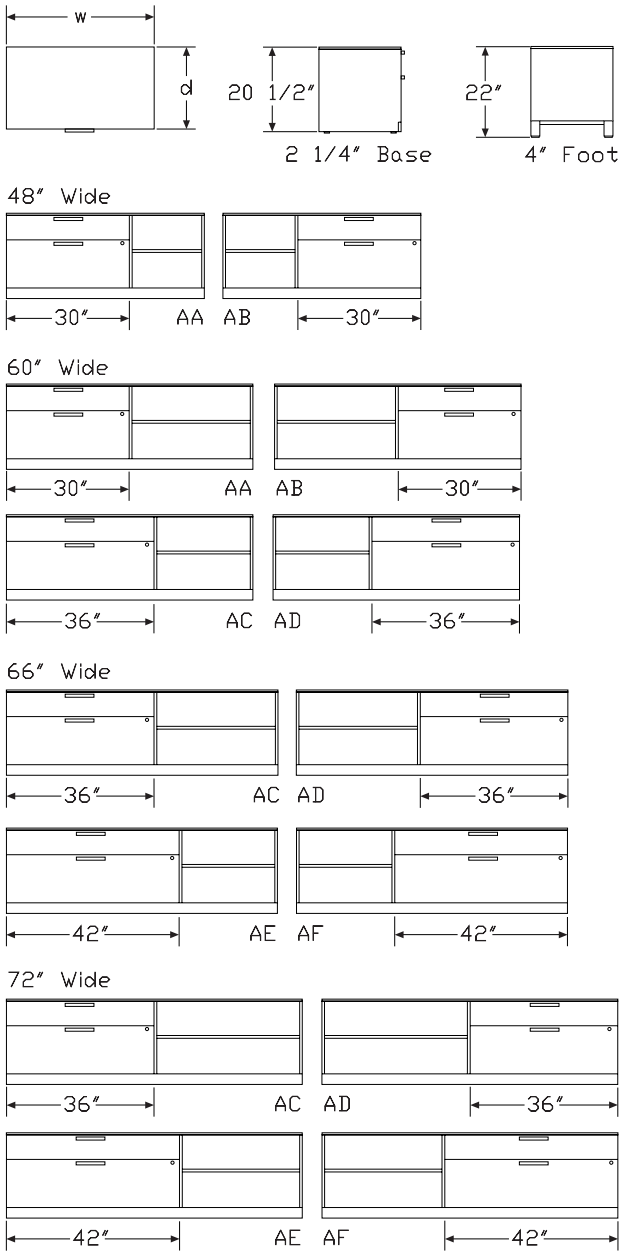

Wood Low Credenza, Open with Drawers *continued*

Specification Information

Step 1.

FFC73 A

Step 2. Pull Type

A. arc pull A
K. bar pull A

Step 3. Width

48 48" wide A
60 60" wide A
66 66" wide A
72 72" wide A

Step 4. Depth

20 20" deep A

Step 5. Base/Foot Height

2 2¼"-high base A
4 4"-high foot A
5 4" -high foot sleeveless A

Step 6. Configuration

For 48" wide (48)

AA 30" box/file left, open right A
AB open left, 30" box/file right A

For 60" wide (60)

AA 30" box/file left, open right A
AB open left, 30" box/file right A
AC 36" box/file left, open right A
AD open left, 36" box/file right A

For 66" wide (66)

AC 36" box/file left, open right A
AD open left, 36" box/file right A
AE 42" box/file left, open right A
AF open left, 42" box/file right A

For 72" wide (72)

AC 36" box/file left, open right A
AD open left, 36" box/file right A
AE 42" box/file left, open right A
AF open left, 42" box/file right A

Step 7. Case/Front Material

For 2¼"-high base (2)

L laminate case/front A
C laminate case/veneer front A
W veneer case/front A

For 4"-high foot (4) or 4" -high foot sleeveless (5)

L laminate case/front A
C laminate case/veneer front A

Step 8. Top

For laminate case/front (L) or laminate case/veneer front (C)

NT no top A
03 ⅜" laminate top A
04 ⅜" veneer top A
06 1¼" laminate top A
07 1¼" veneer top A

For veneer case/front (W)

NT no top A
04 ⅜" veneer top A
07 1¼" veneer top A

Prices for Steps 1-8.

			2AALNT	2AAL03	2AAL04	2AAL06	2AAL07	2AACNT
FFC73A.	**48**	**20**	$2754	2896	3150	2677	2931	3187
	60	**20**	$3025	3130	3479	2977	3259	3504

			2AAC03	2AAC04	2AAC06	2AAC07	2AAWNT	2AAW04
FFC73A.	**48**	**20**	$3329	3584	3111	3364	4292	4659
	60	**20**	$3673	3958	3455	3739	4747	5141

			2AAW07	2ABLNT	2ABL03	2ABL04	2ABL06	2ABL07
FFC73A.	**48**	**20**	$4550	2754	2896	3150	2677	2931
	60	**20**	$4923	3025	3130	3479	2977	3259

			2ABCNT	2ABC03	2ABC04	2ABC06	2ABC07	2ABWNT
FFC73A.	**48**	**20**	$3187	3329	3584	3111	3364	4292
	60	**20**	$3504	3673	3958	3455	3739	4747

			2ABW04	2ABW07	2ACLNT	2ACL03	2ACL04	2ACL06
FFC73A.	**48**	**20**	$4659	4550	—	—	—	—
	60	**20**	$5141	4923	3112	3280	3563	3061
	66	**20**	—	—	$3221	3389	3672	3170
	72	**20**	—	—	$3232	3393	3812	3245

Wood Low Credenza, Open with Drawers *continued*

		2ACL07	2ACCNT	2ACC03	2ACC04	2ACC06	2ACC07
FFC73A.	60 20	$3345	3601	3771	4056	3553	3836
	66 20	$3454	3729	3898	4182	3679	3963
	72 20	$3593	3751	3983	4330	3764	4112

		2ACWNT	2ACW04	2ACW07	2AELNT	2AEL03	2AEL04
FFC73A.	60 20	$4882	5280	5061	—	—	—
	66 20	$5060	5456	5237	3305	3476	3759
	72 20	$5169	5575	5356	3353	3513	3933

		2AEL06	2AEL07	2AECNT	2AEC03	2AEC04	2AEC06
FFC73A.	66 20	$3256	3540	3826	3995	4280	3777
	72 20	$3367	3714	3891	4040	4472	3905

		2AEC07	2AEWNT	2AEW04	2AEW07	2ADLNT	2ADL03
FFC73A.	60 20	—	—	—	—	$3112	3280
	66 20	$4061	5196	5593	5374	3221	3389
	72 20	$4253	5366	5654	5440	3232	3393

		2ADL04	2ADL06	2ADL07	2ADCNT	2ADC03	2ADC04
FFC73A.	60 20	$3563	3061	3345	3601	3771	4056
	66 20	$3672	3170	3454	3729	3898	4182
	72 20	$3812	3245	3593	3751	3983	4330

		2ADC06	2ADC07	2ADWNT	2ADW04	2ADW07	2AFLNT
FFC73A.	60 20	$3553	3836	4882	5280	5061	—
	66 20	$3679	3963	5060	5456	5237	3305
	72 20	$3764	4112	5169	5575	5454	3353

		2AFL03	2AFL04	2AFL06	2AFL07	2AFCNT	2AFC03
FFC73A.	66 20	$3476	3759	3256	3540	3826	3995
	72 20	$3513	3933	3367	3714	3891	4124

		2AFC04	2AFC06	2AFC07	2AFWNT	2AFW04	2AFW07
FFC73A.	66 20	$4280	3777	4061	5196	5593	5374
	72 20	$4472	3905	4253	5366	5654	5553

		4AALNT	4AAL03	4AAL04	4AAL06	4AAL07	4AACNT
FFC73A.	48 20	$2896	2975	3291	2818	3072	3325
	60 20	$3166	3270	3620	3119	3401	3642

		4AAC03	4AAC04	4AAC06	4AAC07	4ABLNT	4ABL03
FFC73A.	48 20	$3464	3720	3246	3500	2896	2975
	60 20	$3811	4094	3592	3797	3166	3270

		4ABL04	4ABL06	4ABL07	4ABCNT	4ABC03	4ABC04
FFC73A.	48 20	$3224	2818	3072	3325	3464	3720
	60 20	$3620	3119	3401	3642	3811	4094

		4ABC06	4ABC07	4ACLNT	4ACL03	4ACL04	4ACL06
FFC73A.	48 20	$3246	3500	—	—	—	—
	60 20	$3592	3797	3252	3353	3704	3202
	66 20	—	—	$3361	3461	3814	3313
	72 20	—	—	$3377	3534	3957	3389

		4ACL07	4ACCNT	4ACC03	4ACC04	4ACC06	4ACC07
FFC73A.	60 20	$3486	3739	3908	4191	3690	3972
	66 20	$3595	3865	4034	4319	3816	4099
	72 20	$3738	3887	4119	4467	3900	4248

		4AELNT	4AEL03	4AEL04	4AEL06	4AEL07	4AECNT
FFC73A.	66 20	$3447	3617	3899	3397	3680	3963
	72 20	$3497	3655	4078	3512	3859	4028

		4AEC03	4AEC04	4AEC06	4AEC07	4ADLNT	4ADL03
FFC73A.	60 20	—	—	—	—	$3252	3353
	66 20	$4132	4416	3914	4197	3361	3461
	72 20	$4261	4608	4041	4390	3377	3534

		4ADL04	4ADL06	4ADL07	4ADCNT	4ADC03	4ADC04
FFC73A.	60 20	$3704	3202	3486	3739	3908	4191
	66 20	$3814	3313	3595	3865	4034	4319
	72 20	$3957	3389	3738	3887	4119	4467

		4ADC06	4ADC07	4AFLNT	4AFL03	4AFL04	4AFL06
FFC73A.	60 20	$3690	3972	—	—	—	—
	66 20	$3816	4099	3447	3617	3899	3397
	72 20	$3900	4248	3497	3655	4078	3512

		4AFL07	4AFCNT	4AFC03	4AFC04	4AFC06	4AFC07
FFC73A.	66 20	$3680	3963	4132	4416	3914	4197
	72 20	$3859	4028	4261	4608	4041	4390

		5AALNT	5AAL03	5AAL04	5AAL06	5AAL07	5AACNT
FFC73A.	48 20	$2839	2982	3236	2762	3018	3269
	60 20	$3113	3282	3564	3063	3346	3587

		5AAC03	5AAC04	5AAC06	5AAC07	5ABLNT	5ABL03
FFC73A.	48 20	$3411	3665	3192	3447	2839	2982
	60 20	$3756	4039	3537	3820	3113	3282

		5ABL04	5ABL06	5ABL07	5ABCNT	5ABC03	5ABC04
FFC73A.	48 20	$3236	2762	3018	3269	3411	3665
	60 20	$3564	3063	3346	3587	3756	4039

Wood Low Credenza, Open with Drawers *continued*

			5ABC06	5ABC07	5ACLNT	5ACL03	5ACL04	5ACL06
FFC73A.	48	20	$3192	3447	—	—	—	—
	60	20	$3537	3820	3197	3367	3651	3148
	66	20	—	—	$3306	3478	3760	3258
	72	20	—	—	$3323	3554	3901	3335

			5ACL07	5ACCNT	5ACC03	5ACC04	5ACC06	5ACC07
FFC73A.	60	20	$3432	3684	3854	4136	3635	3918
	66	20	$3542	3811	3981	4264	3762	4045
	72	20	$3683	3833	4065	4412	3847	4193

			5AELNT	5AEL03	5AEL04	5AEL06	5AEL07	5AECNT
FFC73A.	66	20	$3391	3561	3846	3343	3626	3908
	72	20	$3444	3674	4023	3456	3804	3973

			5AEC03	5AEC04	5AEC06	5AEC07	5ADLNT	5ADL03
FFC73A.	60	20	—	—	—	—	$3197	3367
	66	20	$4078	4361	3859	4141	3306	3478
	72	20	$4205	4553	3987	4334	3323	3554

			5ADL04	5ADL06	5ADL07	5ADCNT	5ADC03	5ADC04
FFC73A.	60	20	$3651	3148	3432	3684	3854	4136
	66	20	$3760	3258	3542	3811	3981	4264
	72	20	$3901	3335	3683	3833	4065	4412

			5ADC06	5ADC07	5AFLNT	5AFL03	5AFL04	5AFL06
FFC73A.	60	20	$3635	3918	—	—	—	—
	66	20	$3762	4045	3391	3561	3846	3343
	72	20	$3847	4193	3444	3674	4023	3456

			5AFL07	5AFCNT	5AFC03	5AFC04	5AFC06	5AFC07
FFC73A.	66	20	$3626	3908	4078	4361	3859	4141
	72	20	$3804	3973	4205	4553	3987	4334

			2AALNT	2AAL03	2AAL04	2AAL06	2AAL07	2AACNT
FFC73K.	48	20	$2698	2838	3086	2622	2872	3122
	60	20	$2964	3130	3408	2916	3193	3433

			2AAC03	2AAC04	2AAC06	2AAC07	2AAWNT	2AAW04
FFC73K.	48	20	$3394	3645	3048	3296	4205	4565
	60	20	$3599	3878	3385	3664	4651	5037

			2AAW07	2ABLNT	2ABL03	2ABL04	2ABL06	2ABL07
FFC73K.	48	20	$4458	2698	2838	3086	2622	2872
	60	20	$4823	2964	3130	3408	2916	3193

			2ABCNT	2ABC03	2ABC04	2ABC06	2ABC07	2ABWNT
FFC73K.	48	20	$3122	3262	3511	3048	3296	4205
	60	20	$3433	3599	3878	3385	3664	4651

			2ABW04	2ABW07	2ACLNT	2ACL03	2ACL04	2ACL06
FFC73K.	48	20	$4565	4458	—	—	—	—
	60	20	$5037	4823	3049	3213	3491	2999
	66	20	—	—	$3347	3320	3598	3106
	72	20	—	—	$3167	3393	3734	3179

			2ACL07	2ACCNT	2ACC03	2ACC04	2ACC06	2ACC07
FFC73K.	60	20	$3277	3528	3695	3974	3481	3759
	66	20	$3384	3653	3819	4096	3604	3883
	72	20	$3520	3675	3902	4242	3688	4028

			2ACWNT	2ACW04	2ACW07	2AELNT	2AEL03	2AEL04
FFC73K.	60	20	$4783	5173	4959	—	—	—
	66	20	$4958	5344	5131	3239	3405	3683
	72	20	$5065	5463	5247	3285	3513	3854

			2AEL06	2AEL07	2AECNT	2AEC03	2AEC04	2AEC06
FFC73K.	66	20	$3190	3469	3749	3914	4193	3700
	72	20	$3299	3639	3812	4040	4382	3826

			2AEC07	2AEWNT	2AEW04	2AEW07	2ADLNT	2ADL03
FFC73K.	60	20	—	—	—	—	$3049	3213
	66	20	$3979	5091	5480	5266	3155	3320
	72	20	$4167	5258	5654	5440	3167	3393

			2ADL04	2ADL06	2ADL07	2ADCNT	2ADC03	2ADC04
FFC73K.	60	20	$3491	2999	3277	3528	3695	3974
	66	20	$3902	3106	3384	3653	3819	4096
	72	20	$3734	3179	3520	3675	3902	4242

			2ADC06	2ADC07	2ADWNT	2ADW04	2ADW07	2AFLNT
FFC73K.	60	20	$3481	3759	4783	5173	4959	—
	66	20	$3604	3883	4958	5344	5131	3239
	72	20	$3688	4028	5065	5463	5343	3285

			2AFL03	2AFL04	2AFL06	2AFL07	2AFCNT	2AFC03
FFC73K.	66	20	$3405	3683	3190	3469	3749	3914
	72	20	$3513	3854	3299	3639	3812	4040

			2AFC04	2AFC06	2AFC07	2AFWNT	2AFW04	2AFW07
FFC73K.	66	20	$4193	3700	3979	5091	5480	5266
	72	20	$4382	3826	4167	5258	5654	5440

Wood Low Credenza, Open with Drawers *continued*

		4AALNT	4AAL03	4AAL04	4AAL06	4AAL07	4AACNT
FFC73K.	**48 20**	$2838	2975	3224	2761	3010	3258
	60 20	$3102	3270	3547	3056	3332	3568

		4AAC03	4AAC04	4AAC06	4AAC07	4ABLNT	4ABL03
FFC73K.	**48 20**	$3394	3645	3180	3429	2838	2975
	60 20	$3733	4011	3519	3797	3102	3270

		4ABL04	4ABL06	4ABL07	4ABCNT	4ABC03	4ABC04
FFC73K.	**48 20**	$3224	2761	3010	3258	3394	3645
	60 20	$3547	3056	3332	3568	3733	4011

		4ABC06	4ABC07	4ACLNT	4ACL03	4ACL04	4ACL06
FFC73K.	**48 20**	$3180	3429	—	—	—	—
	60 20	$3519	3797	3186	3353	3629	3138
	66 20	—	—	$3293	3461	3736	3246
	72 20	—	—	$3308	3534	3877	3320

		4ACL07	4ACCNT	4ACC03	4ACC04	4ACC06	4ACC07
FFC73K.	**60 20**	$3415	3664	3829	4106	3615	3892
	66 20	$3522	3787	3953	4231	3739	4016
	72 20	$3663	3808	4035	4377	3821	4162

		4AELNT	4AEL03	4AEL04	4AEL06	4AEL07	4AECNT
FFC73K.	**66 20**	$3377	3544	3820	3328	3605	3883
	72 20	$3426	3655	3995	3441	3781	3947

		4AEC03	4AEC04	4AEC06	4AEC07	4ADLNT	4ADL03
FFC73K.	**60 20**	—	—	—	—	$3186	3353
	66 20	$4049	4326	3834	4112	3293	3461
	72 20	$4175	4515	3960	4301	3308	3534

		4ADL04	4ADL06	4ADL07	4ADCNT	4ADC03	4ADC04
FFC73K.	**60 20**	$3629	3138	3415	3664	3829	4106
	66 20	$3736	3246	3522	3787	3953	4231
	72 20	$3877	3320	3663	3808	4035	4377

		4ADC06	4ADC07	4AFLNT	4AFL03	4AFL04	4AFL06
FFC73K.	**60 20**	$3615	3892	—	—	—	—
	66 20	$3739	4016	3377	3544	3820	3328
	72 20	$3821	4162	3426	3655	3995	3441

		4AFL07	4AFCNT	4AFC03	4AFC04	4AFC06	4AFC07
FFC73K.	**66 20**	$3605	3883	4049	4326	3834	4112
	72 20	$3781	3947	4175	4515	3960	4301

		5AALNT	5AAL03	5AAL04	5AAL06	5AAL07	5AACNT
FFC73K.	**48 20**	$2782	2921	3171	2706	2957	3203
	60 20	$3050	3215	3492	3001	3278	3514

		5AAC03	5AAC04	5AAC06	5AAC07	5ABLNT	5ABL03
FFC73K.	**48 20**	$3342	3591	3127	3377	2782	2921
	60 20	$3680	3958	3466	3743	3050	3215

		5ABL04	5ABL06	5ABL07	5ABCNT	5ABC03	5ABC04
FFC73K.	**48 20**	$3171	2706	2957	3203	3342	3591
	60 20	$3492	3001	3278	3514	3680	3958

		5ABC06	5ABC07	5ACLNT	5ACL03	5ACL04	5ACL06
FFC73K.	**48 20**	$3127	3377	—	—	—	—
	60 20	$3466	3743	3133	3299	3577	3084
	66 20	—	—	$3240	3407	3684	3192
	72 20	—	—	$3256	3482	3822	3268

		5ACL07	5ACCNT	5ACC03	5ACC04	5ACC06	5ACC07
FFC73K.	**60 20**	$3363	3609	3776	4053	3562	3838
	66 20	$3470	3733	3900	4178	3686	3963
	72 20	$3608	3756	3983	4322	3769	4108

		5AELNT	5AEL03	5AEL04	5AEL06	5AEL07	5AECNT
FFC73K.	**66 20**	$3322	3489	3768	3275	3553	3829
	72 20	$3374	3600	3942	3386	3727	3893

		5AEC03	5AEC04	5AEC06	5AEC07	5ADLNT	5ADL03
FFC73K.	**60 20**	—	—	—	—	$3133	3299
	66 20	$3995	4273	3781	4058	3240	3407
	72 20	$4120	4461	3906	4247	3256	3482

		5ADL04	5ADL06	5ADL07	5ADCNT	5ADC03	5ADC04
FFC73K.	**60 20**	$3577	3084	3363	3609	3776	4053
	66 20	$3684	3192	3470	3733	3900	4178
	72 20	$3822	3268	3608	3756	3983	4322

		5ADC06	5ADC07	5AFLNT	5AFL03	5AFL04	5AFL06
FFC73K.	**60 20**	$3562	3838	—	—	—	—
	66 20	$3686	3963	3322	3489	3768	3275
	72 20	$3769	4108	3374	3600	3942	3386

		5AFL07	5AFCNT	5AFC03	5AFC04	5AFC06	5AFC07
FFC73K.	**66 20**	$3553	3829	3995	4273	3781	4058
	72 20	$3727	3893	4120	4461	3906	4247

Step 9. Case Finish

For 48" wide (48) or 60" wide (60) with laminate case/front (L), or laminate case/veneer front (C)

LBM	crisp linen A	+$0
LBN	classic linen A	+$0
LBP	casual linen A	+$0

For 48" wide (48) or 60" wide (60) with laminate case/front (L), or laminate case/veneer front (C)

LBK	pewter mesh A	+$0
LBL	steel mesh A	+$0

Solid-Color Laminate

For 48" wide (48) or 60" wide (60) with laminate case/front (L), or laminate case/veneer front (C)

8Q	folkstone grey A	+$0
91	white A	+$0
98	studio white A	+$0
CL	cool grey neutral A	+$0
LU	soft white A	+$0
WL	sandstone A	+$0
WN	warm grey neutral A	+$0

For 48" wide (48) or 60" wide (60) with laminate case/front (L), or laminate case/veneer front (C)

LBG	sarum twill A	+$0
LBH	earthen twill A	+$0
LBJ	graphite twill A	+$0
LBQ	white twill A	+$0

Wood-Grain Laminate

For 48" wide (48) or 60" wide (60) with laminate case/front (L), or laminate case/veneer front (C)

LBC	walnut on ash A	+$0
LBE	medium red walnut A	+$0
HM	natural maple A	+$0
HP	light anigre A	+$0
LBA	clear on ash A	+$0
LBR	phantom ecru A	+$0
LBS	phantom cocoa A	+$0
LBU	medium matte walnut A	+$0
LBV	warm grey teak A	+$0
LBB	oak on ash A	+$0
LBD	dark brown walnut A	+$0
76	light brown walnut A	+$0
HX	aged cherry A	+$0
HY	walnut on cherry A	+$0

For 66" wide (66) or 72" wide (72) with laminate case/front (L), or laminate case/veneer front (C)

LBM	crisp linen A	+$0
LBN	classic linen A	+$0
LBP	casual linen A	+$0

For 66" wide (66) or 72" wide (72) with laminate case/front (L), or laminate case/veneer front (C)

LBK	pewter mesh A	+$0
LBL	steel mesh A	+$0

Solid-Color Laminate

For 66" wide (66) or 72" wide (72) with laminate case/front (L), or laminate case/veneer front (C)

8Q	folkstone grey A	+$0
91	white A	+$0
98	studio white A	+$0
CL	cool grey neutral A	+$0
LU	soft white A	+$0
WL	sandstone A	+$0
WN	warm grey neutral A	+$0

Wood Veneer

For veneer case/front (W)

2U	light brown walnut A	+$0
40	dark brown walnut A	+$0
ED	aged cherry A	+$0
EK	medium red walnut A	+$0
EW	medium matte walnut A	+$0
ET	clear on ash A	+$0
EU	oak on ash A	+$0
EV	walnut on ash A	+$0
UL	natural maple A	+$0
UX	walnut on cherry A	+$0

Step 10. Front Finish

For laminate case/front (L)

LBM	crisp linen A	+$0
LBN	classic linen A	+$0
LBP	casual linen A	+$0

For laminate case/front (L)

LBK	pewter mesh A	+$0
LBL	steel mesh A	+$0

Solid-Color Laminate

For laminate case/front (L)

8Q	folkstone grey A	+$0
91	white A	+$0
98	studio white A	+$0
CL	cool grey neutral A	+$0
LU	soft white A	+$0
WL	sandstone A	+$0
WN	warm grey neutral A	+$0

For laminate case/front (L)

LBF	neutral twill A	+$0
LBG	sarum twill A	+$0
LBH	earthen twill A	+$0
LBJ	graphite twill A	+$0
LBQ	white twill A	+$0

Wood-Grain Laminate

For laminate case/front (L)

LBC	walnut on ash A	+$0
LBE	medium red walnut A	+$0
HM	natural maple A	+$0
HP	light anigre A	+$0
LBA	clear on ash A	+$0
LBR	phantom ecru A	+$0
LBS	phantom cocoa A	+$0
LBU	medium matte walnut A	+$0
LBV	warm grey teak A	+$0
LBB	oak on ash A	+$0
LBD	dark brown walnut A	+$0
76	light brown walnut A	+$0
HX	aged cherry A	+$0
HY	walnut on cherry A	+$0

Wood Veneer

For laminate case/veneer front (C) or veneer case/front (W)

2U	light brown walnut A	+$0
40	dark brown walnut A	+$0
ED	aged cherry A	+$0
EK	medium red walnut A	+$0
EW	medium matte walnut A	+$0
ET	clear on ash A	+$0
EU	oak on ash A	+$0
EV	walnut on ash A	+$0
UL	natural maple A	+$0
UX	walnut on cherry A	+$0

Step 11. Top Finish

For 3/8" laminate top (03) or 1 1/4" laminate top (06)

LBM	crisp linen A	+$0
LBN	classic linen A	+$0
LBP	casual linen A	+$0

For 3/8" laminate top (03) or 1 1/4" laminate top (06)

LBK	pewter mesh A	+$0
LBL	steel mesh A	+$0

Solid-Color Laminate

For 3/8" laminate top (03) or 1 1/4" laminate top (06)

8Q	folkstone grey A	+$0
91	white A	+$0
98	studio white A	+$0
CL	cool grey neutral A	+$0
LU	soft white A	+$0
WL	sandstone A	+$0
WN	warm grey neutral A	+$0

For 3/8" laminate top (03) or 1 1/4" laminate top (06)

LBF	neutral twill A	+$0
LBG	sarum twill A	+$0
LBH	earthen twill A	+$0
LBJ	graphite twill A	+$0
LBQ	white twill A	+$0

Wood-Grain Laminate

For 3/8" laminate top (03) or 1 1/4" laminate top (06)

LBC	walnut on ash A	+$0
LBE	medium red walnut A	+$0
HM	natural maple A	+$0
HP	light anigre A	+$0
LBA	clear on ash A	+$0
LBR	phantom ecru A	+$0
LBS	phantom cocoa A	+$0
LBU	medium matte walnut A	+$0
LBV	warm grey teak A	+$0
LBB	oak on ash A	+$0
LBD	dark brown walnut A	+$0
76	light brown walnut A	+$0
HX	aged cherry A	+$0
HY	walnut on cherry A	+$0

Wood Veneer

For 3/8" veneer top (04) or 1 1/4" veneer top (07)

2U	light brown walnut A	+$0
40	dark brown walnut A	+$0
ED	aged cherry A	+$0
EK	medium red walnut A	+$0
EW	medium matte walnut A	+$0
ET	clear on ash A	+$0
EU	oak on ash A	+$0
EV	walnut on ash A	+$0
UL	natural maple A	+$0
UX	walnut on cherry A	+$0

Step 12. Foot Finish

For 4"-high foot (4) or 4" -high foot sleeveless (5)

Sand Texture Paint

8Q	folkstone grey A	+$0
91	white A	+$0
98	studio white A	+$0
CL	cool grey neutral A	+$0
G1	graphite A	+$0
WL	sandstone A	+$0
WN	warm grey neutral A	+$0

Metallic Paint

CN	metallic champagne A	+$0
EH	metallic bronze A	+$0
MS	metallic silver A	+$0

Step 13. Pull Finish

For arc pull (A.)

NH	brushed nickel A	+$0
NK	black nickel A	+$0

Metallic Paint

For bar pull (K.)

CN	metallic champagne A	+$0
MS	metallic silver A	+$0

Sand Texture Paint

For bar pull (K.)

BK	black A	+$0
79	green apple A	+$15
MY3	yellow oxide A	+$15
RO	red A	+$15
TRQ	turquoise A	+$15

Smooth Paint

For bar pull (K.)

8Q	folkstone grey A	+$0
91	white A	+$0
98	studio white A	+$0
G1	graphite A	+$0
WL	sandstone A	+$0

Step 14. Counterweight

NO	no counterweight A	+$0
CB	counterweight A	+$70

Step 15. Lock Option		
KA	keyed alike A	-$10
KC	keyed differently, chrome A	+$0
KD	keyed differently, black A	+$0

Wood Low Credenza, Doors with Drawers

FFC74A
FFC74K

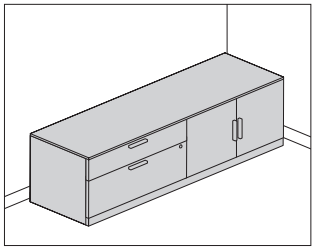

Product Information

Description

This credenza provides enclosed filing and storage and can be used freestanding or to support 1 end of a surface. It has a 3/8"-high or 1 1/4"-high laminate or veneer top with a laminate or veneer case. It is available with 4"-high architectural feet, 4"-high sleeveless architectural feet or a 2 1/4"-high base with 1" leveling glides and has a positive interlock system that permits only 1 drawer to open at a time. Drawers have full-extension ball-bearing slides. The file drawer accommodates side-to-side and front-to-back filing of letter-, legal, and A4-size hanging files.

Actual credenza widths are 47 3/4", 59 3/4" or 71 3/4"; actual depth is 19 7/8".

Notes

For additional product options, see Vary Easy Program in Appendices.

Arc pull option (A.) conforms to guidelines of Americans with Disabilities Act (ADA).

Grain direction is vertical on veneer and wood-grain laminate fronts.

Storage compartment with door(s) includes 1 adjustable shelf that adjusts in 1 1/4" increments.

Credenza with 4"-high foot option (4) and 3/8" thin top can be used to support a Canvas wall-based frame. Order support bracket, low credenza-to-frame (FT292.) separately.

When using credenza to support 1 end of a surface, order 1 of the following products separately:

- Surface support, low credenza, adjustable height (FT299.)
- Surface support, low credenza, fixed height (FT298.)

To cover adjacent credenzas with a single top, specify credenzas with no top option (NT) and order credenza top (FF890.) separately.

1 1/4" top (06 and 07) is not removable and cannot be used to support a Canvas wall-based frame. The 1 1/4" top will add 5/8" to overall height of unit.

Please note that on the 4" sleeveless architectural foot (5) glides will be more visible.

Order optional wood credenza shelf (FF892.) separately.

To provide temporary guest seating on a credenza, order cushion top (FF891.) separately.

For keyed-alike locks, see Keyed-Alike Information in Appendices.

Dimensions

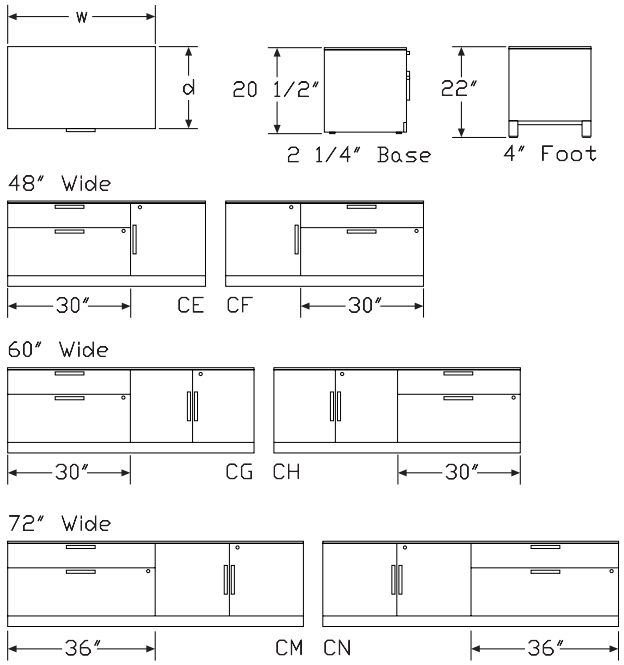

Wood Low Credenza, Doors with Drawers *continued*

Specification Information

Step 1.

FFC74 A

Step 2. Pull Type

A. arc pull A
K. bar pull A

Step 3. Width

48 48" wide A
60 60" wide A
72 72" wide A

Step 4. Depth

20 20" deep A

Step 5. Base/Foot Height

2 2¼"-high base A
4 4"-high foot A
5 4" -high foot sleeveless A

Step 6. Configuration

For 48" wide (48)

CE 30" box/file left, single door right A
CF single door left, 30" box/file right A

For 60" wide (60)

CG 30" box/file left, double doors right A
CH double doors left, 30" box/file right A

For 72" wide (72)

CM 36" box/file left, double doors right A
CN double doors left, 36" box/file right A

Step 7. Case/Front Material

For 2¼"-high base (2)

L laminate case/front A
C laminate case/veneer front A
W veneer case/front A

For 4"-high foot (4) or 4" -high foot sleeveless (5)

L laminate case/front A
C laminate case/veneer front A

Step 8. Top

For laminate case/front (L) or laminate case/veneer front (C)

NT no top A
03 ⅜" laminate top A
04 ⅜" veneer top A
06 1¼" laminate top A
07 1¼" veneer top A

For veneer case/front (W)

NT no top A
04 ⅜" veneer top A
07 1¼" veneer top A

Prices for Steps 1-8.

			2CELNT	2CEL03	2CEL04	2CEL06	2CEL07	2CECNT
FFC74A.	48	20	$2889	3027	3277	2813	3063	3373

			2CEC03	2CEC04	2CEC06	2CEC07	2CEWNT	2CEW04
FFC74A.	48	20	$3511	3761	3296	3547	4555	4916

			2CEW07	2CGLNT	2CGL03	2CGL04	2CGL06	2CGL07
FFC74A.	48	20	$4702	—	—	—	—	—
	60	20	—	$3303	3470	3746	3256	3531

			2CGCNT	2CGC03	2CGC04	2CGC06	2CGC07	2CGWNT
FFC74A.	60	20	$3995	4162	4439	3948	4224	5438

			2CGW04	2CGW07	2CMLNT	2CML03	2CML04	2CML06
FFC74A.	60	20	$5826	5611	—	—	—	—
	72	20	—	—	$3547	3769	4101	3554

			2CML07	2CMCNT	2CMC03	2CMC04	2CMC06	2CMC07
FFC74A.	72	20	$3887	4300	4521	4855	4307	4640

			2CMWNT	2CMW04	2CMW07	2CFLNT	2CFL03	2CFL04
FFC74A.	48	20	—	—	—	$2889	3027	3277
	72	20	$5942	6329	6115	—	—	—

			2CFL06	2CFL07	2CFCNT	2CFC03	2CFC04	2CFC06
FFC74A.	48	20	$2813	3063	3373	3511	3761	3296

			2CFC07	2CFWNT	2CFW04	2CFW07	2CHLNT	2CHL03
FFC74A.	48	20	$3547	4555	4916	4702	—	—
	60	20	—	—	—	—	$3303	3470

Wood Low Credenza, Doors with Drawers *continued*

		2CHL04	2CHL06	2CHL07	2CHCNT	2CHC03	2CHC04
FFC74A.	60 20	$3746	3256	3531	3995	4162	4439

		2CHC06	2CHC07	2CHWNT	2CHW04	2CHW07	2CNLNT
FFC74A.	60 20	$3948	4224	5438	5826	5611	—
	72 20	—	—	—	—	—	$3547

		2CNL03	2CNL04	2CNL06	2CNL07	2CNCNT	2CNC03
FFC74A.	72 20	$3769	4101	3554	3887	4300	4521

		2CNC04	2CNC06	2CNC07	2CNWNT	2CNW04	2CNW07
FFC74A.	72 20	$4855	4307	4640	5942	6329	6115

		4CELNT	4CEL03	4CEL04	4CEL06	4CEL07	4CECNT
FFC74A.	48 20	$3027	3166	3415	2952	3201	3507

		4CEC03	4CEC04	4CEC06	4CEC07	4CGLNT	4CGL03
FFC74A.	48 20	$3645	3894	3429	3680	—	—
	60 20	—	—	—	—	$3442	3606

		4CGL04	4CGL06	4CGL07	4CGCNT	4CGC03	4CGC04
FFC74A.	60 20	$3885	3392	3671	4129	4297	4572

		4CGC06	4CGC07	4CMLNT	4CML03	4CML04	4CML06
FFC74A.	60 20	$4083	4358	—	—	—	—
	72 20	—	—	$3686	3907	4239	3693

		4CML07	4CMCNT	4CMC03	4CMC04	4CMC06	4CMC07
FFC74A.	72 20	$4025	4434	4656	4988	4441	4774

		4CFLNT	4CFL03	4CFL04	4CFL06	4CFL07	4CFCNT
FFC74A.	48 20	$3027	3166	3415	2952	3201	3507

		4CFC03	4CFC04	4CFC06	4CFC07	4CHLNT	4CHL03
FFC74A.	48 20	$3645	3894	3429	3680	—	—
	60 20	—	—	—	—	$3442	3606

		4CHL04	4CHL06	4CHL07	4CHCNT	4CHC03	4CHC04
FFC74A.	60 20	$3885	3392	3671	4129	4297	4572

		4CHC06	4CHC07	4CNLNT	4CNL03	4CNL04	4CNL06
FFC74A.	60 20	$4083	4358	—	—	—	—
	72 20	—	—	$3686	3907	4239	3693

		4CNL07	4CNCNT	4CNC03	4CNC04	4CNC06	4CNC07
FFC74A.	72 20	$4025	4434	4656	4988	4441	4774

		5CELNT	5CEL03	5CEL04	5CEL06	5CEL07	5CECNT
FFC74A.	48 20	$2974	3112	3363	2898	3149	3454

		5CEC03	5CEC04	5CEC06	5CEC07	5CGLNT	5CGL03
FFC74A.	48 20	$3591	3841	3377	3626	—	—
	60 20	—	—	—	—	$3387	3554

		5CGL04	5CGL06	5CGL07	5CGCNT	5CGC03	5CGC04
FFC74A.	60 20	$3831	3340	3617	4077	4242	4519

		5CGC06	5CGC07	5CMLNT	5CML03	5CML04	5CML06
FFC74A.	60 20	$4028	4305	—	—	—	—
	72 20	—	—	$3631	3854	4187	3639

		5CML07	5CMCNT	5CMC03	5CMC04	5CMC06	5CMC07
FFC74A.	72 20	$3973	4381	4602	4935	4388	4721

		5CFLNT	5CFL03	5CFL04	5CFL06	5CFL07	5CFCNT
FFC74A.	48 20	$2974	3112	3363	2898	3149	3318

		5CFC03	5CFC04	5CFC06	5CFC07	5CHLNT	5CHL03
FFC74A.	48 20	$3458	3706	3243	3492	—	—
	60 20	—	—	—	—	$3387	3554

		5CHL04	5CHL06	5CHL07	5CHCNT	5CHC03	5CHC04
FFC74A.	60 20	$3831	3340	3617	3942	4108	4386

		5CHC06	5CHC07	5CNLNT	5CNL03	5CNL04	5CNL06
FFC74A.	60 20	$3894	4171	—	—	—	—
	72 20	—	—	$3631	3854	4187	3639

		5CNL07	5CNCNT	5CNC03	5CNC04	5CNC06	5CNC07
FFC74A.	72 20	$3973	4246	4468	4802	4254	4588

		2CELNT	2CEL03	2CEL04	2CEL06	2CEL07	2CECNT
FFC74K.	48 20	$2949	3027	3345	2871	3126	3443

		2CEC03	2CEC04	2CEC06	2CEC07	2CEWNT	2CEW04
FFC74K.	48 20	$3584	3838	3364	3620	4649	5018

		2CEW07	2CGLNT	2CGL03	2CGL04	2CGL06	2CGL07
FFC74K.	48 20	$4799	—	—	—	—	—
	60 20	—	$3371	3470	3823	3256	3604

		2CGCNT	2CGC03	2CGC04	2CGC06	2CGC07	2CGWNT
FFC74K.	60 20	$4161	4330	4519	4112	4394	5551

Wood Low Credenza, Doors with Drawers *continued*

		2CGW04	2CGW07	2CMLNT	2CML03	2CML04	2CML06
FFC74K.	60 20	$5826	5727	—	—	—	—
	72 20	—	—	$3620	3847	4186	3554

		2CML07	2CMCNT	2CMC03	2CMC04	2CMC06	2CMC07
FFC74K.	72 20	$3967	4389	4615	4955	4396	4640

		2CMWNT	2CMW04	2CMW07	2CFLNT	2CFL03	2CFL04
FFC74K.	48 20	—	—	—	$2949	3027	3345
	72 20	$6065	6460	6241	—	—	—

		2CFL06	2CFL07	2CFCNT	2CFC03	2CFC04	2CFC06
FFC74K.	48 20	$2871	3126	3443	3584	3838	3364

		2CFC07	2CFWNT	2CFW04	2CFW07	2CHLNT	2CHL03
FFC74K.	48 20	$3620	4649	5018	4702	—	—
	60 20	—	—	—	—	$3371	3470

		2CHL04	2CHL06	2CHL07	2CHCNT	2CHC03	2CHC04
FFC74K.	60 20	$3746	3323	3604	4078	4248	4531

		2CHC06	2CHC07	2CHWNT	2CHW04	2CHW07	2CNLNT
FFC74K.	60 20	$4029	4312	5551	5947	5727	—
	72 20	—	—	—	—	—	$3620

		2CNL03	2CNL04	2CNL06	2CNL07	2CNCNT	2CNC03
FFC74K.	72 20	$3847	4186	3627	3967	4389	4615

		2CNC04	2CNC06	2CNC07	2CNWNT	2CNW04	2CNW07
FFC74K.	72 20	$4955	4396	4736	6065	6460	6241

		4CELNT	4CEL03	4CEL04	4CEL06	4CEL07	4CECNT
FFC74K.	48 20	$3090	3166	3486	3013	3267	3580

		4CEC03	4CEC04	4CEC06	4CEC07	4CGLNT	4CGL03
FFC74K.	48 20	$3720	3894	3500	3756	—	—
	60 20	—	—	—	—	$3513	3606

		4CGL04	4CGL06	4CGL07	4CGCNT	4CGC03	4CGC04
FFC74K.	60 20	$3965	3462	3747	4215	4386	4666

		4CGC06	4CGC07	4CMLNT	4CML03	4CML04	4CML06
FFC74K.	60 20	$4167	4448	—	—	—	—
	72 20	—	—	$3686	3907	4327	3769

		4CML07	4CMCNT	4CMC03	4CMC04	4CMC06	4CMC07
FFC74K.	72 20	$4108	4526	4752	5091	4533	4872

		4CFLNT	4CFL03	4CFL04	4CFL06	4CFL07	4CFCNT
FFC74K.	48 20	$3090	3166	3486	3013	3267	3580

		4CFC03	4CFC04	4CFC06	4CFC07	4CHLNT	4CHL03
FFC74K.	48 20	$3720	3894	3500	3756	—	—
	60 20	—	—	—	—	$3513	3606

		4CHL04	4CHL06	4CHL07	4CHCNT	4CHC03	4CHC04
FFC74K.	60 20	$3965	3392	3747	4215	4386	4666

		4CHC06	4CHC07	4CNLNT	4CNL03	4CNL04	4CNL06
FFC74K.	60 20	$4167	4448	—	—	—	—
	72 20	—	—	$3762	3907	4327	3769

		4CNL07	4CNCNT	4CNC03	4CNC04	4CNC06	4CNC07
FFC74K.	72 20	$4108	4526	4752	5091	4533	4872

		5CELNT	5CEL03	5CEL04	5CEL06	5CEL07	5CECNT
FFC74K.	48 20	$3035	3177	3432	2958	3214	3525

		5CEC03	5CEC04	5CEC06	5CEC07	5CGLNT	5CGL03
FFC74K.	48 20	$3665	3920	3447	3701	—	—
	60 20	—	—	—	—	$3457	3627

		5CGL04	5CGL06	5CGL07	5CGCNT	5CGC03	5CGC04
FFC74K.	60 20	$3911	3409	3692	4023	4193	4477

		5CGC06	5CGC07	5CMLNT	5CML03	5CML04	5CML06
FFC74K.	60 20	$3974	4257	—	—	—	—
	72 20	—	—	$3706	3933	4273	3714

		5CML07	5CMCNT	5CMC03	5CMC04	5CMC06	5CMC07
FFC74K.	72 20	$4055	4471	4697	5037	4479	4819

		5CFLNT	5CFL03	5CFL04	5CFL06	5CFL07	5CFCNT
FFC74K.	48 20	$3035	3177	3432	2958	3214	3387

		5CFC03	5CFC04	5CFC06	5CFC07	5CHLNT	5CHL03
FFC74K.	48 20	$3529	3783	3310	3564	—	—
	60 20	—	—	—	—	$3457	3627

		5CHL04	5CHL06	5CHL07	5CHCNT	5CHC03	5CHC04
FFC74K.	60 20	$3911	3409	3692	4023	4193	4477

		5CHC06	5CHC07	5CNLNT	5CNL03	5CNL04	5CNL06
FFC74K.	60 20	$3974	4257	—	—	—	—
	72 20	—	—	$3706	3933	4273	3714

	5CNL07	5CNCNT	5CNC03	5CNC04	5CNC06	5CNC07
FFC74K. 72 20	$4055	4333	4560	4901	4341	4683

Step 9. Case Finish

For 48" wide (48) or 60" wide (60) with laminate case/front (L), or laminate case/veneer front (C)

LBM	crisp linen A	+$0
LBN	classic linen A	+$0
LBP	casual linen A	+$0

For 48" wide (48) or 60" wide (60) with laminate case/front (L), or laminate case/veneer front (C)

LBK	pewter mesh A	+$0
LBL	steel mesh A	+$0

Solid-Color Laminate

For 48" wide (48) or 60" wide (60) with laminate case/front (L), or laminate case/veneer front (C)

8Q	folkstone grey A	+$0
91	white A	+$0
98	studio white A	+$0
CL	cool grey neutral A	+$0
LU	soft white A	+$0
WL	sandstone A	+$0
WN	warm grey neutral A	+$0

For 48" wide (48) or 60" wide (60) with laminate case/front (L), or laminate case/veneer front (C)

LBF	neutral twill A	+$0
LBG	sarum twill A	+$0
LBH	earthen twill A	+$0
LBJ	graphite twill A	+$0
LBQ	white twill A	+$0

Wood-Grain Laminate

For 48" wide (48) or 60" wide (60) with laminate case/front (L), or laminate case/veneer front (C)

LBC	walnut on ash A	+$0
LBE	medium red walnut A	+$0
HM	natural maple A	+$0
HP	light anigre A	+$0
LBA	clear on ash A	+$0
LBR	phantom ecru A	+$0
LBS	phantom cocoa A	+$0
LBU	medium matte walnut A	+$0
LBV	warm grey teak A	+$0
LBB	oak on ash A	+$0
LBD	dark brown walnut A	+$0
76	light brown walnut A	+$0
HX	aged cherry A	+$0
HY	walnut on cherry A	+$0

For 72" wide (72) with laminate case/front (L), or laminate case/veneer front (C)

LBM	crisp linen A	+$0
LBN	classic linen A	+$0
LBP	casual linen A	+$0

For 72" wide (72) with laminate case/front (L), or laminate case/veneer front (C)

LBK	pewter mesh A	+$0
LBL	steel mesh A	+$0

Solid-Color Laminate

For 72" wide (72) with laminate case/front (L), or laminate case/veneer front (C)

8Q	folkstone grey A	+$0
91	white A	+$0
98	studio white A	+$0
CL	cool grey neutral A	+$0
LU	soft white A	+$0
WL	sandstone A	+$0
WN	warm grey neutral A	+$0

Wood Veneer

For veneer case/front (W)

2U	light brown walnut A	+$0
40	dark brown walnut A	+$0
ED	aged cherry A	+$0
EK	medium red walnut A	+$0
EW	medium matte walnut A	+$0
ET	clear on ash A	+$0
EU	oak on ash A	+$0
EV	walnut on ash A	+$0
UL	natural maple A	+$0
UX	walnut on cherry A	+$0

Step 10. Front Finish

For laminate case/front (L)

LBM	crisp linen A	+$0
LBN	classic linen A	+$0
LBP	casual linen A	+$0

For laminate case/front (L)

LBK	pewter mesh A	+$0
LBL	steel mesh A	+$0

Solid-Color Laminate

For laminate case/front (L)

8Q	folkstone grey A	+$0
91	white A	+$0
98	studio white A	+$0
CL	cool grey neutral A	+$0
LU	soft white A	+$0
WL	sandstone A	+$0
WN	warm grey neutral A	+$0

For laminate case/front (L)

LBF	neutral twill A	+$0
LBG	sarum twill A	+$0
LBH	earthen twill A	+$0
LBJ	graphite twill A	+$0
LBQ	white twill A	+$0

Wood-Grain Laminate

For laminate case/front (L)

LBC	walnut on ash A	+$0
LBE	medium red walnut A	+$0
HM	natural maple A	+$0
HP	light anigre A	+$0
LBA	clear on ash A	+$0
LBR	phantom ecru A	+$0
LBS	phantom cocoa A	+$0
LBU	medium matte walnut A	+$0
LBV	warm grey teak A	+$0
LBB	oak on ash A	+$0
LBD	dark brown walnut A	+$0
76	light brown walnut A	+$0
HX	aged cherry A	+$0
HY	walnut on cherry A	+$0

Wood Veneer

For laminate case/veneer front (C) or veneer case/front (W)

2U	light brown walnut A	+$0
40	dark brown walnut A	+$0
ED	aged cherry A	+$0
EK	medium red walnut A	+$0
EW	medium matte walnut A	+$0
ET	clear on ash A	+$0
EU	oak on ash A	+$0
EV	walnut on ash A	+$0
UL	natural maple A	+$0
UX	walnut on cherry A	+$0

Step 11. Top Finish

For 3/8" laminate top (03) or 1 1/4" laminate top (06)

LBM	crisp linen A	+$0
LBN	classic linen A	+$0
LBP	casual linen A	+$0

For 3/8" laminate top (03) or 1 1/4" laminate top (06)

LBK	pewter mesh A	+$0
LBL	steel mesh A	+$0

Wood Low Credenza, Doors with Drawers *continued*

Solid-Color Laminate

For 3/8" laminate top (03) or 1 1/4" laminate top (06)

8Q	folkstone grey A	+$0
91	white A	+$0
98	studio white A	+$0
CL	cool grey neutral A	+$0
LU	soft white A	+$0
WL	sandstone A	+$0
WN	warm grey neutral A	+$0

For 3/8" laminate top (03) or 1 1/4" laminate top (06)

LBF	neutral twill A	+$0
LBG	sarum twill A	+$0
LBH	earthen twill A	+$0
LBJ	graphite twill A	+$0
LBQ	white twill A	+$0

Wood-Grain Laminate

For 3/8" laminate top (03) or 1 1/4" laminate top (06)

LBC	walnut on ash A	+$0
LBE	medium red walnut A	+$0
HM	natural maple A	+$0
HP	light anigre A	+$0
LBA	clear on ash A	+$0
LBR	phantom ecru A	+$0
LBS	phantom cocoa A	+$0
LBU	medium matte walnut A	+$0
LBV	warm grey teak A	+$0
LBB	oak on ash A	+$0
LBD	dark brown walnut A	+$0
76	light brown walnut A	+$0
HX	aged cherry A	+$0
HY	walnut on cherry A	+$0

Wood Veneer

For 3/8" veneer top (04) or 1 1/4" veneer top (07)

2U	light brown walnut A	+$0
40	dark brown walnut A	+$0
ED	aged cherry A	+$0
EK	medium red walnut A	+$0
EW	medium matte walnut A	+$0
ET	clear on ash A	+$0
EU	oak on ash A	+$0
EV	walnut on ash A	+$0
UL	natural maple A	+$0
UX	walnut on cherry A	+$0

Step 12. Foot Finish

For 4"-high foot (4) or 4" -high foot sleeveless (5)

Sand Texture Paint

91	white A	+$0
CL	cool grey neutral A	+$0
G1	graphite A	+$0
WN	warm grey neutral A	+$0
8Q	folkstone grey A	+$0
98	studio white A	+$0
WL	sandstone A	+$0

Metallic Paint

CN	metallic champagne A	+$0
EH	metallic bronze A	+$0
MS	metallic silver A	+$0

Step 13. Pull Finish

For arc pull (A.)

NH	brushed nickel A	+$0
NK	black nickel A	+$0

Metallic Paint

For bar pull (K.)

CN	metallic champagne A	+$0
MS	metallic silver A	+$0

Sand Texture Paint

For bar pull (K.)

BK	black A	+$0
79	green apple A	+$15
MY3	yellow oxide A	+$15
RO	red A	+$15
TRQ	turquoise A	+$15

Smooth Paint

For bar pull (K.)

8Q	folkstone grey A	+$0
91	white A	+$0
98	studio white A	+$0
G1	graphite A	+$0
WL	sandstone A	+$0

Step 14. Counterweight

NO	no counterweight A	+$0
CB	counterweight A	+$70

Step 15. Lock Option		
KA	keyed alike A	-$10
KC	keyed differently, chrome A	+$0
KD	keyed differently, black A	+$0

Wood High Credenza, Open FF800.

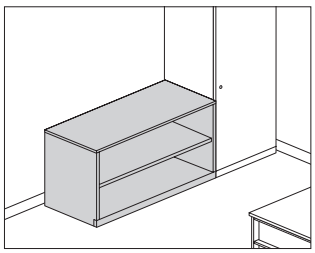

Product Information

Description

This freestanding credenza provides open storage. It has a 3/8"-high laminate or veneer top and a laminate or veneer case. The credenza has a 2 1/4"-high base with 1" leveling glides.

Actual credenza widths are 29 7/8", 35 7/8", or 41 7/8"; actual depth is 19 7/8".

Notes

For additional product options, see Vary Easy Program in Appendices.

30"- and 36"-wide credenzas have no center divider and 1 adjustable shelf. 42"-wide credenza has a center divider and 2 adjustable shelves. Shelves adjust in 1 1/4" increments.

Order optional wood credenza shelf (FF892.) separately.

To cover adjacent credenzas with a single top, specify credenzas with no top option (NT) and order credenza top (FF890.) separately.

No top (NT) option includes spacer kit that creates 1/4" reveal between the top of a wood pedestal, lateral file, or high credenza and a 1 1/4"-thick worksurface placed at 28 1/4" high. Worksurface ordered separately.

Dimensions

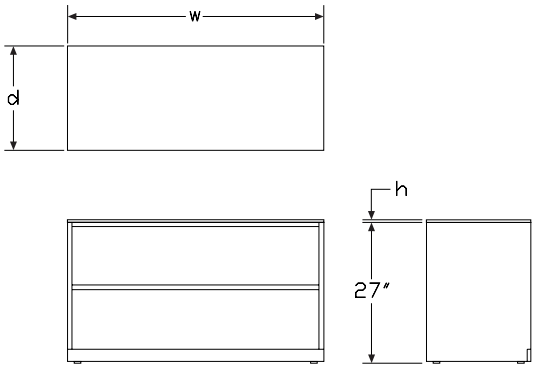

Specification Information

Step 1.

FF800. A

Step 2. Width

30 30" wide A
36 36" wide A
42 42" wide A

Step 3. Depth

20 20" deep A

Step 4. Base Height

2 2 1/4"-high base A

Step 5. Case/Base Material

L laminate A
C laminate case/veneer base A
W veneer A

Step 6. Top

For laminate (L) or laminate case/veneer base (C)

NT no top A
03 3/8" laminate top A
04 3/8" veneer top A

For veneer (W)

NT no top A
04 3/8" veneer top A

Prices for Steps 1-6.

			2LNT	2L03	2L04	2CNT	2C03	2C04
FF800.	**30**	**20**	$1559	1672	1897	1727	1840	2064
	36	**20**	$1656	1768	1994	1825	1937	2161
	42	**20**	$1670	1781	2006	1838	1949	2173

			2WNT	2W04
FF800.	**30**	**20**	$2691	3041
	36	**20**	$2869	3218
	42	**20**	$2891	3241

Step 7. Case Finish

Solid-Color Laminate

For laminate (L) or laminate case/veneer base (C)

8Q	folkstone grey [A]	+$0
91	white [A]	+$0
98	studio white	+$0
CL	cool grey neutral [A]	+$0
LU	soft white [A]	+$0
WL	sandstone [A]	+$0
WN	warm grey neutral [A]	+$0

Linen Laminate

For laminate (L) or laminate case/veneer base (C)

LBM	crisp linen	+$0
LBN	classic linen	+$0
LBP	casual linen	+$0

Mesh Laminate

For laminate (L) or laminate case/veneer base (C)

LBK	pewter mesh	+$0
LBL	steel mesh	+$0

Twill Laminate

For laminate (L) or laminate case/veneer base (C)

LBF	neutral twill	+$0
LBG	sarum twill	+$0
LBH	earthen twill	+$0
LBJ	graphite twill	+$0
LBQ	white twill	+$0

Wood-Grain Laminate

For laminate (L) or laminate case/veneer base (C)

HM	natural maple [A]	+$0
HP	light anigre [A]	+$0
LBA	clear on ash	+$0
LBR	phantom ecru	+$0
LBS	phantom cocoa	+$0
LBU	medium matte walnut	+$0
LBV	warm grey teak	+$0
LBB	oak on ash	+$0
LBC	walnut on ash	+$0
LBD	dark brown walnut	+$0
LBE	medium red walnut	+$0
76	light brown walnut [A]	+$0
HX	aged cherry [A]	+$0
HY	walnut on cherry [A]	+$0

Wood Veneer

For veneer (W)

2U	light brown walnut [A]	+$0
40	dark brown walnut [A]	+$0
ED	aged cherry [A]	+$0
EK	medium red walnut [A]	+$0
EW	medium matte walnut [A]	+$0
ET	clear on ash [A]	+$0
EU	oak on ash [A]	+$0
EV	walnut on ash [A]	+$0
UL	natural maple [A]	+$0
UX	walnut on cherry [A]	+$0

Step 8. Top Finish

Solid-Color Laminate

For 3/8" laminate top (03)

8Q	folkstone grey [A]	+$0
91	white [A]	+$0
98	studio white	+$0
CL	cool grey neutral [A]	+$0
LU	soft white [A]	+$0
WL	sandstone [A]	+$0
WN	warm grey neutral [A]	+$0

Linen Laminate

For 3/8" laminate top (03)

LBM	crisp linen	+$0
LBN	classic linen	+$0
LBP	casual linen	+$0

Mesh Laminate

For 3/8" laminate top (03)

LBK	pewter mesh	+$0
LBL	steel mesh	+$0

Twill Laminate

For 3/8" laminate top (03)

LBF	neutral twill	+$0
LBG	sarum twill	+$0
LBH	earthen twill	+$0
LBJ	graphite twill	+$0
LBQ	white twill	+$0

Wood-Grain Laminate

For 3/8" laminate top (03)

HM	natural maple A	+$0
HP	light anigre A	+$0
LBA	clear on ash	+$0
LBR	phantom ecru	+$0
LBS	phantom cocoa	+$0
LBU	medium matte walnut	+$0
LBV	warm grey teak	+$0
LBB	oak on ash	+$0
LBC	walnut on ash	+$0
LBD	dark brown walnut	+$0
LBE	medium red walnut	+$0
76	light brown walnut A	+$0
HX	aged cherry A	+$0
HY	walnut on cherry A	+$0

Wood Veneer

For 3/8" veneer top (04)

2U	light brown walnut A	+$0
40	dark brown walnut A	+$0
ED	aged cherry A	+$0
EK	medium red walnut A	+$0
EW	medium matte walnut A	+$0
ET	clear on ash A	+$0
EU	oak on ash A	+$0
EV	walnut on ash A	+$0
UL	natural maple A	+$0
UX	walnut on cherry A	+$0

Step 9. Base Finish

Solid-Color Laminate

For laminate (L)

8Q	folkstone grey A	+$0
91	white A	+$0
98	studio white	+$0
CL	cool grey neutral A	+$0
LU	soft white A	+$0
WL	sandstone A	+$0
WN	warm grey neutral A	+$0

Linen Laminate

For laminate (L)

LBM	crisp linen	+$0
LBN	classic linen	+$0
LBP	casual linen	+$0

Mesh Laminate

For laminate (L)

LBK	pewter mesh	+$0
LBL	steel mesh	+$0

Twill Laminate

For laminate (L)

LBF	neutral twill	+$0
LBG	sarum twill	+$0
LBH	earthen twill	+$0
LBJ	graphite twill	+$0
LBQ	white twill	+$0

Wood-Grain Laminate

For laminate (L)

HM	natural maple A	+$0
HP	light anigre A	+$0
LBA	clear on ash	+$0
LBR	phantom ecru	+$0
LBS	phantom cocoa	+$0
LBU	medium matte walnut	+$0
LBV	warm grey teak	+$0
LBB	oak on ash	+$0
LBC	walnut on ash	+$0
LBD	dark brown walnut	+$0
LBE	medium red walnut	+$0
76	light brown walnut A	+$0
HX	aged cherry A	+$0
HY	walnut on cherry A	+$0

Wood Veneer

For laminate case/veneer base (C) or veneer (W)

2U	light brown walnut A	+$0
40	dark brown walnut A	+$0
ED	aged cherry A	+$0
EK	medium red walnut A	+$0
EW	medium matte walnut A	+$0
ET	clear on ash A	+$0
EU	oak on ash A	+$0
EV	walnut on ash A	+$0
UL	natural maple A	+$0
UX	walnut on cherry A	+$0

Wood High Credenza, with Doors FF81A. FF81K.

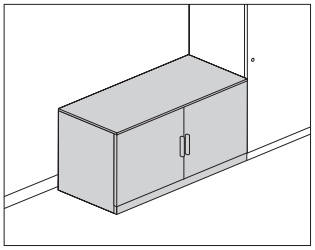

Product Information

Description

This freestanding credenza provides enclosed storage. It has a 3/8"-high laminate or veneer top and the choice of a laminate case and front, veneer case and front, or laminate case with veneer front. The credenza has a 2 1/4"-high base with 1" leveling glides.

Actual credenza widths are 29 7/8", 35 7/8", or 41 7/8"; actual depth is 19 7/8".

Notes

For additional product options, see Vary Easy Program in Appendices.

Arc pull option (A.) conforms to guidelines of Americans with Disabilities Act (ADA).

Grain direction is vertical on veneer and wood-grain laminate fronts.

30"- and 36"-wide credenzas have no center divider and 1 adjustable shelf. 42"-wide credenza has a center divider and 2 adjustable shelves. Shelves adjust in 1 1/4" increments.

Order optional wood credenza shelf (FF892.) separately.

To cover adjacent credenzas with a single top, specify credenzas with no top option (NT) and order credenza top (FF890.) separately.

For keyed-alike locks, see Keyed-Alike Information in Appendices.

No top (NT) option includes spacer kit that creates 1/4" reveal between the top of a wood pedestal, lateral file, or high credenza and a 1 1/4"-thick worksurface placed at 28 1/4" high. Worksurface ordered separately.

Dimensions

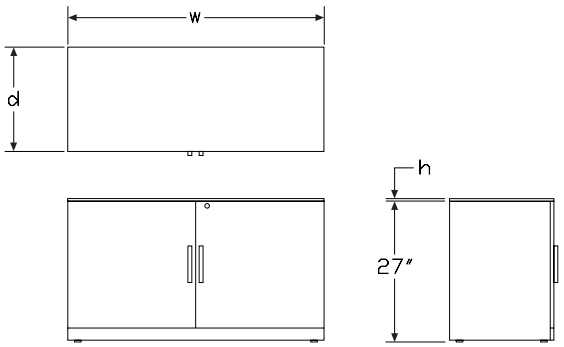

Specification Information

Step 1.

FF81 A

Step 2. Pull Type

A. arc pull A

K. bar pull A

Step 3. Width

30 30" wide A

36 36" wide A

42 42" wide A

Step 4. Depth

20 20" deep A

Step 5. Base Height

2 2 1/4"-high base A

Step 6. Case/Door Material

L laminate A

C laminate case/veneer door A

W veneer A

Step 7. Top

For laminate (L) or laminate case/veneer door (C)

NT no top A

03 3/8" laminate top A

04 3/8" veneer top A

For veneer (W)

NT no top A

04 3/8" veneer top A

Step 8. Lock

L lock A

Prices for Steps 1-8.

		2LNTL	2L03L	2L04L	2CNTL	2C03L	2C04L
FF81A.	**30 20**	$1930	2042	2310	2128	2242	2467
	36 20	$2125	2236	2508	2365	2479	2651
	42 20	$2318	2430	2707	2603	2716	2882

		2WNTL	2W04L
FF81A.	**30 20**	$3335	3753
	36 20	$3670	4095

	42 20					$4088	4439

		2LNTL	**2L03L**	**2L04L**	**2CNTL**	**2C03L**	**2C04L**
FF81K.	**30 20**	$1930	2042	2263	2085	2196	2417
	36 20	$2125	2236	2457	2317	2429	2651
	42 20	$2318	2430	2652	2551	2661	2882

		2WNTL	**2W04L**
FF81K.	**30 20**	$3335	3677
	36 20	$3670	4012
	42 20	$4005	4350

Step 9. Case Finish

Solid-Color Laminate
For laminate (L) or laminate case/veneer door (C)

8Q	folkstone grey A	+$0
91	white A	+$0
98	studio white	+$0
CL	cool grey neutral A	+$0
LU	soft white A	+$0
WL	sandstone A	+$0
WN	warm grey neutral A	+$0

Linen Laminate
For laminate (L) or laminate case/veneer door (C)

LBM	crisp linen	+$0
LBN	classic linen	+$0
LBP	casual linen	+$0

Mesh Laminate
For laminate (L) or laminate case/veneer door (C)

LBK	pewter mesh	+$0
LBL	steel mesh	+$0

Twill Laminate
For laminate (L) or laminate case/veneer door (C)

LBF	neutral twill	+$0
LBG	sarum twill	+$0
LBH	earthen twill	+$0
LBJ	graphite twill	+$0
LBQ	white twill	+$0

Wood-Grain Laminate
For laminate (L) or laminate case/veneer door (C)

HM	natural maple A	+$0
HP	light anigre A	+$0
LBA	clear on ash	+$0
LBR	phantom ecru	+$0
LBS	phantom cocoa	+$0
LBU	medium matte walnut	+$0
LBV	warm grey teak	+$0
LBB	oak on ash	+$0
LBC	walnut on ash	+$0
LBD	dark brown walnut	+$0
LBE	medium red walnut	+$0
76	light brown walnut A	+$0
HX	aged cherry A	+$0
HY	walnut on cherry A	+$0

Wood Veneer
For veneer (W)

2U	light brown walnut A	+$0
40	dark brown walnut A	+$0
ED	aged cherry A	+$0
EK	medium red walnut A	+$0
EW	medium matte walnut A	+$0
ET	clear on ash A	+$0
EU	oak on ash A	+$0
EV	walnut on ash A	+$0
UL	natural maple A	+$0
UX	walnut on cherry A	+$0

Step 10. Door Finish

Solid-Color Laminate
For laminate (L)

8Q	folkstone grey A	+$0
91	white A	+$0
98	studio white	+$0
CL	cool grey neutral A	+$0
LU	soft white A	+$0
WL	sandstone A	+$0
WN	warm grey neutral A	+$0

Linen Laminate
For laminate (L)

LBM	crisp linen	+$0
LBN	classic linen	+$0
LBP	casual linen	+$0

Wood High Credenza, with Doors

continued

Mesh Laminate

For laminate (L)

LBK	pewter mesh	+$0
LBL	steel mesh	+$0

Twill Laminate

For laminate (L)

LBF	neutral twill	+$0
LBG	sarum twill	+$0
LBH	earthen twill	+$0
LBJ	graphite twill	+$0
LBQ	white twill	+$0

Wood-Grain Laminate

For laminate (L)

HM	natural maple A	+$0
HP	light anigre A	+$0
LBA	clear on ash	+$0
LBR	phantom ecru	+$0
LBS	phantom cocoa	+$0
LBU	medium matte walnut	+$0
LBV	warm grey teak	+$0
LBB	oak on ash	+$0
LBC	walnut on ash	+$0
LBD	dark brown walnut	+$0
LBE	medium red walnut	+$0
76	light brown walnut A	+$0
HX	aged cherry A	+$0
HY	walnut on cherry A	+$0

Wood Veneer

For laminate case/veneer door (C) or veneer (W)

2U	light brown walnut A	+$0
40	dark brown walnut A	+$0
ED	aged cherry A	+$0
EK	medium red walnut A	+$0
EW	medium matte walnut A	+$0
ET	clear on ash A	+$0
EU	oak on ash A	+$0
EV	walnut on ash A	+$0
UL	natural maple A	+$0
UX	walnut on cherry A	+$0

Step 11. Top Finish

Solid-Color Laminate

For 3/8" laminate top (03)

8Q	folkstone grey A	+$0
91	white A	+$0
98	studio white	+$0
CL	cool grey neutral A	+$0
LU	soft white A	+$0
WL	sandstone A	+$0
WN	warm grey neutral A	+$0

Linen Laminate

For 3/8" laminate top (03)

LBM	crisp linen	+$0
LBN	classic linen	+$0
LBP	casual linen	+$0

Mesh Laminate

For 3/8" laminate top (03)

LBK	pewter mesh	+$0
LBL	steel mesh	+$0

Twill Laminate

For 3/8" laminate top (03)

LBF	neutral twill	+$0
LBG	sarum twill	+$0
LBH	earthen twill	+$0
LBJ	graphite twill	+$0
LBQ	white twill	+$0

Wood-Grain Laminate

For 3/8" laminate top (03)

HM	natural maple A	+$0
HP	light anigre A	+$0
LBA	clear on ash	+$0
LBR	phantom ecru	+$0
LBS	phantom cocoa	+$0
LBU	medium matte walnut	+$0
LBV	warm grey teak	+$0
LBB	oak on ash	+$0
LBC	walnut on ash	+$0
LBD	dark brown walnut	+$0
LBE	medium red walnut	+$0
76	light brown walnut A	+$0
HX	aged cherry A	+$0
HY	walnut on cherry A	+$0

Wood High Credenza, with Doors

continued

Wood Veneer		
For 3/8" veneer top (04)		
2U	light brown walnut A	+$0
40	dark brown walnut A	+$0
ED	aged cherry A	+$0
EK	medium red walnut A	+$0
EW	medium matte walnut A	+$0
ET	clear on ash A	+$0
EU	oak on ash A	+$0
EV	walnut on ash A	+$0
UL	natural maple A	+$0
UX	walnut on cherry A	+$0

Step 12. Pull Finish		
For arc pull (A.)		
NH	brushed nickel A	+$0
NK	black nickel A	+$0
Metallic Paint		
For bar pull (K.)		
CN	metallic champagne A	+$0
MS	metallic silver A	+$0
Sand Texture Paint		
For bar pull (K.)		
BK	black A	+$0
79	green apple A	+$15
MY3	yellow oxide A	+$15
RO	red A	+$15
TRQ	turquoise A	+$15
Smooth Paint		
For bar pull (K.)		
8Q	folkstone grey A	+$0
91	white A	+$0
98	studio white A	+$0
G1	graphite A	+$0
WL	sandstone A	+$0
Step 13. Lock Option		
KA	keyed alike A	-$10
KC	keyed differently, chrome A	+$0
KD	keyed differently, black A	+$0

Powered Wood Low Credenza, Open with Drawers

FFD73A
FFD73K

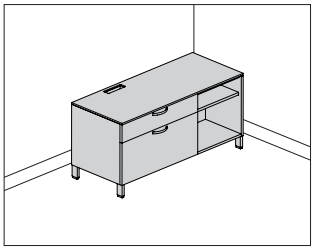

Product Information

Description

This powered credenza provides drawer storage on 1 side with open storage on the other side and can be used freestanding, to support 1 end of a surface, or attached to a Canvas wall-based frame to support a frame run. It has a 3/8"-high laminate or veneer top and the choice of a laminate case and front, veneer case and front, or laminate case with veneer front. The credenza is available with 4"-high architectural feet with 1" leveling glides and has a positive interlock system that permits only 1 drawer to open at a time. Drawers have full-extension ball-bearing slides. The file drawer(s) accommodate side-to-side and front-to-back filing of letter-, legal, and A4-size hanging files. Connect™ power distributors with modular ends are ordered and installed separately.

Actual powered credenza widths are 47 3/4", 59 3/4", 65 3/4", or 71 3/4"; actual depth is 19 7/8".

Notes

For additional product options, see Vary Easy® Program in Appendices.

Arc pull option (A.) conforms to guidelines of Americans with Disabilities Act (ADA).

Grain direction is vertical on veneer and wood-grain laminate fronts.

Open side of credenza includes 1 adjustable shelf that adjusts in 1 1/4" increments.

Credenza with 4"-high foot option (4) and 3/8" thin top can be used to support a Canvas wall-based frame. Order support bracket, low credenza-to-frame (FT292.) separately.

When using credenza to support 1 end of a surface, order 1 of the following products separately:

- Surface support, low credenza, adjustable height (FT299.)
- Surface support, low credenza, fixed height (FT298.)

To cover adjacent credenzas with a single top, specify credenzas with no top option (NT) and order credenza top (FM890.) separately.

Order optional wood credenza shelf (FF892.) separately.

To provide temporary guest seating on a credenza, order cushion top (FF891.) separately.

Order the following products separately:

- Connect - S310 electrical unit with connect modular connection (Y1329.)
- Connect - power entry, 4-circuit (Y1351.)
- Connect - junction block to junction block jumper, 4-circuit (Y1353.)
- Connect - H-block connector, 4-circuit (Y1354.H)

Powered credenzas must be ganged together.

For keyed-alike locks, see Keyed-Alike Information in Appendices.

Dimensions

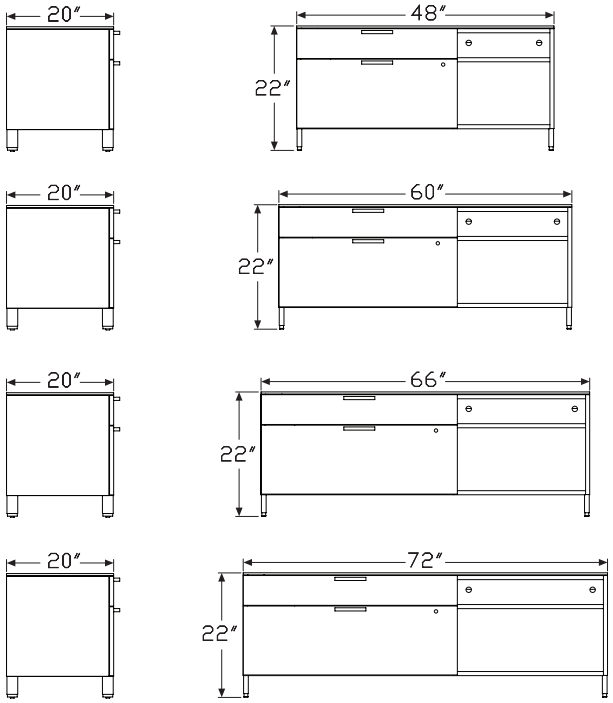

Powered Wood Low Credenza, Open with Drawers *continued*

Specification Information

Step 1.

FFD73 A

Step 2. Pull Type

A. arc pull A
K. bar pull A

Step 3. Width

48 48" wide A
60 60" wide A
66 66" wide A
72 72" wide A

Step 4. Depth

20 20" deep A

Step 5. Base/Foot Height

4 4"-high foot A

Step 6. Configuration

For 48" wide (48)

AA 30" box/file left, open right A
AB open left, 30" box/file right A

For 60" wide (60)

AA 30" box/file left, open right A
AB open left, 30" box/file right A
AC 36" box/file left, open right A
AD open left, 36" box/file right A

For 66" wide (66)

AC 36" box/file left, open right A
AD open left, 36" box/file right A
AE 42" box/file left, open right A
AF open left, 42" box/file right A

For 72" wide (72)

AC 36" box/file left, open right A
AD open left, 36" box/file right A
AE 42" box/file left, open right A
AF open left, 42" box/file right A

Step 7. Case/Front Material

L laminate case/front A
C laminate case/veneer front A

Step 8. Top

NT no top A
03 3/8" laminate top A
04 3/8" veneer top A

Step 9. Top Power Access Location

For open left, 30" box/file right (AB), open left, 36" box/file right (AD), or open left, 42" box/file right (AF)

L left center access A

For 30" box/file left, open right (AA), 36" box/file left, open right (AC), or 42" box/file left, open right (AE)

R right center access A

Step 10. Inside Power Access Location

N no access A
A power access inside of credenza A

Prices for Steps 1-10.

			4AALNTRN	4AALNTRA	4AAL03RN	4AAL03RA	4AAL04RN	4AAL04RA
FFD73A.	**48**	**20**	$3087	3115	3228	3255	3483	3511
	60	**20**	$3358	3385	3529	3556	3811	3838

			4AACNTRN	4AACNTRA	4AAC03RN	4AAC03RA	4AAC04RN	4AAC04RA
FFD73A.	**48**	**20**	$3516	3544	3657	3684	3912	3938
	60	**20**	$3833	3860	4002	4029	4286	4314

			4ABLNTLN	4ABLNTLA	4ABL03LN	4ABL03LA	4ABL04LN	4ABL04LA
FFD73A.	**48**	**20**	$3087	3115	3228	3255	3483	3511
	60	**20**	$3358	3385	3529	3556	3811	3838

			4ABCNTLN	4ABCNTLA	4ABC03LN	4ABC03LA	4ABC04LN	4ABC04LA
FFD73A.	**48**	**20**	$3516	3544	3657	3684	3912	3938
	60	**20**	$3833	3860	4002	4029	4286	4314

			4ACLNTRN	4ACLNTRA	4ACL03RN	4ACL03RA	4ACL04RN	4ACL04RA
FFD73A.	**60**	**20**	$3444	3470	3614	3640	3896	3923
	66	**20**	$3553	3581	3724	3751	4005	4032
	72	**20**	$3567	3595	3800	3827	4148	4175

			4ACCNTRN	4ACCNTRA	4ACC03RN	4ACC03RA	4ACC04RN	4ACC04RA
FFD73A.	**60**	**20**	$3929	3958	4099	4127	4384	4409
	66	**20**	$4058	4084	4226	4254	4509	4537
	72	**20**	$4079	4106	4311	4337	4658	4687

Powered Wood Low Credenza, Open with Drawers *continued*

		4AELNTRN	4AELNTRA	4AEL03RN	4AEL03RA	4AEL04RN	4AEL04RA
FFD73A.	**66 20**	$3638	3665	3807	3835	4091	4118
	72 20	$3690	3716	3921	3950	4270	4296

		4AECNTRN	4AECNTRA	4AEC03RN	4AEC03RA	4AEC04RN	4AEC04RA
FFD73A.	**66 20**	$4154	4182	4324	4351	4607	4635
	72 20	$4220	4247	4452	4480	4800	4827

		4ADLNTLN	4ADLNTLA	4ADL03LN	4ADL03LA	4ADL04LN	4ADL04LA
FFD73A.	**60 20**	$3444	3470	3614	3640	3896	3923
	66 20	$3553	3581	3724	3751	4005	4032
	72 20	$3567	3595	3800	3827	4148	4175

		4ADCNTLN	4ADCNTLA	4ADC03LN	4ADC03LA	4ADC04LN	4ADC04LA
FFD73A.	**60 20**	$3929	3958	4099	4127	4384	4409
	66 20	$4058	4084	4226	4254	4509	4537
	72 20	$4079	4106	4311	4337	4658	4687

		4AFLNTLN	4AFLNTLA	4AFL03LN	4AFL03LA	4AFL04LN	4AFL04LA
FFD73A.	**66 20**	$3638	3665	3807	3835	4091	4118
	72 20	$3690	3716	3921	3950	4270	4296

		4AFCNTLN	4AFCNTLA	4AFC03LN	4AFC03LA	4AFC04LN	4AFC04LA
FFD73A.	**66 20**	$4154	4182	4324	4351	4607	4635
	72 20	$4220	4247	4452	4480	4800	4827

		4AALNTRN	4AALNTRA	4AAL03RN	4AAL03RA	4AAL04RN	4AAL04RA
FFD73K.	**48 20**	$3024	3052	3163	3189	3412	3440
	60 20	$3290	3316	3458	3484	3733	3761

		4AACNTRN	4AACNTRA	4AAC03RN	4AAC03RA	4AAC04RN	4AAC04RA
FFD73K.	**48 20**	$3445	3472	3583	3609	3832	3859
	60 20	$3756	3782	3921	3948	4199	4226

		4ABLNTLN	4ABLNTLA	4ABL03LN	4ABL03LA	4ABL04LN	4ABL04LA
FFD73K.	**48 20**	$3024	3052	3163	3189	3412	3440
	60 20	$3290	3316	3458	3484	3733	3761

		4ABCNTLN	4ABCNTLA	4ABC03LN	4ABC03LA	4ABC04LN	4ABC04LA
FFD73K.	**48 20**	$3445	3472	3583	3609	3832	3859
	60 20	$3756	3782	3921	3948	4199	4226

		4ACLNTRN	4ACLNTRA	4ACL03RN	4ACL03RA	4ACL04RN	4ACL04RA
FFD73K.	**60 20**	$3374	3400	3541	3567	3817	3844
	66 20	$3481	3508	3649	3675	3924	3951
	72 20	$3495	3522	3723	3750	4064	4091

		4ACCNTRN	4ACCNTRA	4ACC03RN	4ACC03RA	4ACC04RN	4ACC04RA
FFD73K.	**60 20**	$3850	3878	4016	4044	4295	4320
	66 20	$3976	4001	4140	4168	4418	4446
	72 20	$3996	4023	4223	4250	4564	4592

		4AELNTRN	4AELNTRA	4AEL03RN	4AEL03RA	4AEL04RN	4AEL04RA
FFD73K.	**66 20**	$3565	3591	3730	3758	4008	4034
	72 20	$3615	3641	3842	3870	4184	4209

		4AECNTRN	4AECNTRA	4AEC03RN	4AEC03RA	4AEC04RN	4AEC04RA
FFD73K.	**66 20**	$4070	4097	4236	4263	4514	4541
	72 20	$4134	4161	4362	4389	4703	4729

		4ADLNTLN	4ADLNTLA	4ADL03LN	4ADL03LA	4ADL04LN	4ADL04LA
FFD73K.	**60 20**	$3374	3400	3541	3567	3817	3844
	66 20	$3481	3508	3649	3675	3924	3951
	72 20	$3495	3522	3723	3750	4064	4091

		4ADCNTLN	4ADCNTLA	4ADC03LN	4ADC03LA	4ADC04LN	4ADC04LA
FFD73K.	**60 20**	$3850	3878	4016	4044	4295	4320
	66 20	$3976	4001	4140	4168	4418	4446
	72 20	$3996	4023	4223	4250	4564	4592

		4AFLNTLN	4AFLNTLA	4AFL03LN	4AFL03LA	4AFL04LN	4AFL04LA
FFD73K.	**66 20**	$3565	3591	3730	3758	4008	4034
	72 20	$3615	3641	3842	3870	4184	4209

		4AFCNTLN	4AFCNTLA	4AFC03LN	4AFC03LA	4AFC04LN	4AFC04LA
FFD73K.	**66 20**	$4070	4097	4236	4263	4514	4541
	72 20	$4134	4161	4362	4389	4703	4729

Step 11. Case Finish

Solid-Color Laminate

For 48" wide (48), 60" wide (60), 66" wide (66), or 72" wide (72) with laminate case/front (L), or laminate case/veneer front (C)

8Q	folkstone grey A	+$0
91	white A	+$0
CL	cool grey neutral A	+$0
LU	soft white A	+$0
WL	sandstone A	+$0
WN	warm grey neutral A	+$0

Powered Wood Low Credenza, Open with Drawers *continued*

Wood-Grain Laminate

For 48" wide (48) or 60" wide (60) with laminate case/front (L), or laminate case/veneer front (C)

HM	natural maple [A]	+$0
HP	light anigre [A]	+$0
LBA	clear on ash	+$0
LBB	oak on ash	+$0
LBC	walnut on ash	+$0
LBD	dark brown walnut	+$0
LBR	phantom ecru	+$0
LBS	phantom cocoa	+$0
LBU	medium matte walnut	+$0
LBV	warm grey teak	+$0
LBE	medium red walnut	+$0
76	light brown walnut [A]	+$0
HX	aged cherry [A]	+$0
HY	walnut on cherry [A]	+$0

Step 12. Front Finish

Solid-Color Laminate

For laminate case/front (L)

8Q	folkstone grey [A]	+$0
91	white [A]	+$0
CL	cool grey neutral [A]	+$0
LU	soft white [A]	+$0
WL	sandstone [A]	+$0
WN	warm grey neutral [A]	+$0

Wood-Grain Laminate

For laminate case/front (L)

HM	natural maple [A]	+$0
HP	light anigre [A]	+$0
LBA	clear on ash	+$0
LBB	oak on ash	+$0
LBC	walnut on ash	+$0
LBD	dark brown walnut	+$0
LBR	phantom ecru	+$0
LBS	phantom cocoa	+$0
LBU	medium matte walnut	+$0
LBV	warm grey teak	+$0
LBE	medium red walnut	+$0
76	light brown walnut [A]	+$0
HX	aged cherry [A]	+$0
HY	walnut on cherry [A]	+$0

Wood Veneer

For laminate case/veneer front (C)

2U	light brown walnut [A]	+$0
40	dark brown walnut [A]	+$0
ED	aged cherry [A]	+$0
EK	medium red walnut [A]	+$0
EW	medium matte walnut [A]	+$0
ET	clear on ash [A]	+$0
EV	walnut on ash [A]	+$0
UL	natural maple [A]	+$0
UX	walnut on cherry [A]	+$0

Step 13. Top Finish

Solid-Color Laminate

For 3/8" laminate top (03)

8Q	folkstone grey [A]	+$0
91	white [A]	+$0
CL	cool grey neutral [A]	+$0
LU	soft white [A]	+$0
WL	sandstone [A]	+$0
WN	warm grey neutral [A]	+$0

Wood-Grain Laminate

For 3/8" laminate top (03)

HM	natural maple [A]	+$0
HP	light anigre [A]	+$0
76	light brown walnut [A]	+$0
LBA	clear on ash	+$0
LBB	oak on ash	+$0
LBC	walnut on ash	+$0
LBD	dark brown walnut	+$0
LBR	phantom ecru	+$0
LBS	phantom cocoa	+$0
LBU	medium matte walnut	+$0
LBV	warm grey teak	+$0
LBE	medium red walnut	+$0
HX	aged cherry [A]	+$0
HY	walnut on cherry [A]	+$0

Powered Wood Low Credenza, Open with Drawers *continued*

Wood Veneer

For 3/8" veneer top (04)

2U	light brown walnut A	+$0
40	dark brown walnut A	+$0
ED	aged cherry A	+$0
EK	medium red walnut A	+$0
EW	medium matte walnut A	+$0
ET	clear on ash A	+$0
EV	walnut on ash A	+$0
UL	natural maple A	+$0
UX	walnut on cherry A	+$0

Step 14. Foot Finish

Sand Texture Paint

8Q	folkstone grey A	+$0
91	white A	+$0
98	studio white A	+$0
BK	black A	+$0
CL	cool grey neutral A	+$0
G1	graphite A	+$0
WL	sandstone A	+$0
WN	warm grey neutral A	+$0

Metallic Paint

CN	metallic champagne A	+$0
EH	metallic bronze A	+$0
MS	metallic silver A	+$0

Step 15. Pull Finish

For arc pull (A.)

NH	brushed nickel A	+$0
NK	black nickel A	+$0

Metallic Paint

For bar pull (K.)

CN	metallic champagne A	+$0
MS	metallic silver A	+$0

Sand Texture Paint

For bar pull (K.)

BK	black A	+$0
79	green apple A	+$15
MY3	yellow oxide A	+$15
RO	red A	+$15
TRQ	turquoise A	+$15

Smooth Paint

For bar pull (K.)

8Q	folkstone grey A	+$0
91	white A	+$0
98	studio white A	+$0
G1	graphite A	+$0
WL	sandstone A	+$0

Step 16. Counterweight

NO	no counterweight A	+$0
CB	counterweight A	+$70

Step 17. Lock Option

KA	keyed alike A	-$10
KC	keyed differently, chrome A	+$0
KD	keyed differently, black A	+$0

Powered Wood Low Credenza, with Drawers

FFD72A
FFD72K

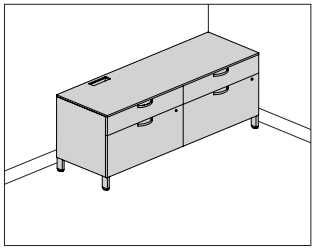

Product Information

Description

This powered credenza provides enclosed filing and storage and can be used freestanding, to support 1 end of a surface, or attached to a Canvas wall-based frame to support a frame run. It has a 3/8"-high laminate or veneer top and the choice of a laminate case and front, veneer case and front, or laminate case with veneer front. The credenza is available with 4"-high architectural feet with 1" leveling glides and has a positive interlock system that permits only 1 drawer to open at a time. Drawers have full-extension ball-bearing slides. The file drawer(s) accommodate side-to-side and front-to-back filing of letter-, legal, and A4-size hanging files. Connect™ power distributors with modular ends are ordered and installed separately.

Actual powered credenza widths are 59 3/4", or 71 3/4"; actual depth is 19 7/8".

Notes

For additional product options, see Vary Easy Program in Appendices.

Arc pull option (A.) conforms to guidelines of Americans with Disabilities Act (ADA).

Grain direction is vertical on veneer and wood-grain laminate fronts.

60"-and 72"-wide credenzas have 2 box drawers and 2 file drawers.

Credenza with 4"-high foot option (4) and 3/8" thin top can be used to support a Canvas wall-based frame. Order support bracket, low credenza-to-frame (FT292.) separately.

When using credenza to support 1 end of a surface, order 1 of the following products separately:

- Surface support, low credenza, adjustable height (FT299.)
- Surface support, low credenza, fixed height (FT298.)

To cover adjacent credenzas with a single top, specify credenzas with no top option (NT) and order credenza top (FM890.) separately.

To provide temporary guest seating on a credenza, order cushion top (FF891.) separately.

Order the following products separately:

- Connect - S310 electrical unit with connect modular connection (Y1329.)
- Connect - power entry, 4-circuit (Y1351.)
- Connect - junction block to junction block jumper, 4-circuit (Y1353.)
- Connect - H-block connector, 4-circuit (Y1354.H)

Powered credenzas must be ganged together.

For keyed-alike locks, see Keyed-Alike Information in Appendices.

Dimensions

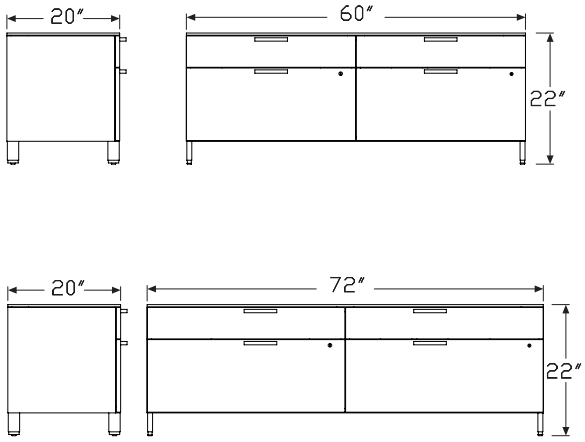

Powered Wood Low Credenza, with Drawers *continued*

Specification Information

Step 1.

FFD72 A

Step 2. Pull Type

A. arc pull A
K. bar pull A

Step 3. Width

60 60" wide A
72 72" wide A

Step 4. Depth

20 20" deep A

Step 5. Base/Foot Height

4 4"-high foot A

Step 6. Configuration

BF box/file A

Step 7. Case/Front Material

L laminate case/front A
C laminate case/veneer front A

Step 8. Top

NT no top A
03 3/8" laminate top A
04 3/8" veneer top A

Step 9. Power Access Location

L left center access A
R right center access A

Prices for Steps 1-9.

		4BFLNTL	4BFLNTR	4BFL03L	4BFL03R	4BFL04L	4BFL04R
FFD72A.	**60 20**	$4337	4337	4507	4507	4792	4792
	72 20	$4945	4945	5057	5057	5173	5283

		4BFCNTL	4BFCNTR	4BFC03L	4BFC03R	4BFC04L	4BFC04R
FFD72A.	**60 20**	$5185	5185	5354	5354	5638	5638
	72 20	$5788	5788	6014	6014	6353	6353

		4BFLNTL	4BFLNTR	4BFL03L	4BFL03R	4BFL04L	4BFL04R
FFD72K.	**60 20**	$4337	4337	4507	4507	4792	4792
	72 20	$4945	4945	5057	5057	5173	5283

		4BFCNTL	4BFCNTR	4BFC03L	4BFC03R	4BFC04L	4BFC04R
FFD72K.	**60 20**	$5185	5185	5354	5354	5638	5638
	72 20	$5788	5788	6014	6014	6353	6353

Step 10. Case Finish

Solid-Color Laminate

For 60" wide (60) or 72" wide (72) with laminate case/front (L), or laminate case/veneer front (C)

8Q folkstone grey A +$0
91 white A +$0
CL cool grey neutral A +$0
LU soft white A +$0
WL sandstone A +$0
WN warm grey neutral A +$0

Wood-Grain Laminate

For 60" wide (60) with laminate case/front (L), or laminate case/veneer front (C)

LBC walnut on ash A +$0
LBE medium red walnut A +$0
HM natural maple A +$0
HP light anigre A +$0
76 light brown walnut A +$0
HX aged cherry A +$0
HY walnut on cherry A +$0

Step 11. Front Finish

Solid-Color Laminate

For laminate case/front (L)

8Q folkstone grey A +$0
91 white A +$0
CL cool grey neutral A +$0
LU soft white A +$0
WL sandstone A +$0
WN warm grey neutral A +$0

Wood-Grain Laminate

For laminate case/front (L)

LBC walnut on ash A +$0
LBE medium red walnut A +$0
HM natural maple A +$0
HP light anigre A +$0
76 light brown walnut A +$0
HX aged cherry A +$0
HY walnut on cherry A +$0

Powered Wood Low Credenza, with Drawers *continued*

Wood Veneer

For laminate case/veneer front (C)

2U	light brown walnut A	+$0
40	dark brown walnut A	+$0
ED	aged cherry A	+$0
EK	medium red walnut A	+$0
EW	medium matte walnut A	+$0
ET	clear on ash A	+$0
EV	walnut on ash A	+$0
UL	natural maple A	+$0
UX	walnut on cherry A	+$0

Step 12. Top Finish

Solid-Color Laminate

For 3/8" laminate top (03)

8Q	folkstone grey A	+$0
91	white A	+$0
CL	cool grey neutral A	+$0
LU	soft white A	+$0
WL	sandstone A	+$0
WN	warm grey neutral A	+$0

Wood-Grain Laminate

For 3/8" laminate top (03)

LBC	walnut on ash A	+$0
LBE	medium red walnut A	+$0
HM	natural maple A	+$0
HP	light anigre A	+$0
76	light brown walnut A	+$0
HX	aged cherry A	+$0
HY	walnut on cherry A	+$0

Wood Veneer

For 3/8" veneer top (04)

2U	light brown walnut A	+$0
40	dark brown walnut A	+$0
ED	aged cherry A	+$0
EK	medium red walnut A	+$0
EW	medium matte walnut A	+$0
ET	clear on ash A	+$0
EV	walnut on ash A	+$0
UL	natural maple A	+$0
UX	walnut on cherry A	+$0

Step 13. Foot Finish

Sand Texture Paint

91	white A	+$0
BK	black A	+$0
CL	cool grey neutral A	+$0
G1	graphite A	+$0
WN	warm grey neutral A	+$0
8Q	folkstone grey A	+$0
98	studio white A	+$0
WL	sandstone A	+$0

Metallic Paint

CN	metallic champagne A	+$0
EH	metallic bronze A	+$0
MS	metallic silver A	+$0

Step 14. Pull Finish

For arc pull (A.)

NH	brushed nickel A	+$0
NK	black nickel A	+$0

Metallic Paint

For bar pull (K.)

CN	metallic champagne A	+$0
MS	metallic silver A	+$0

Sand Texture Paint

For bar pull (K.)

BK	black A	+$0
79	green apple A	+$15
MY3	yellow oxide A	+$15
RO	red A	+$15
TRQ	turquoise A	+$15

Smooth Paint

For bar pull (K.)

8Q	folkstone grey A	+$0
91	white A	+$0
98	studio white A	+$0
G1	graphite A	+$0
WL	sandstone A	+$0

Step 15. Counterweight

NO	no counterweight A	+$0
CB	counterweight A	+$70

Step 16. Lock Option		
KA	keyed alike A	-$10
KC	keyed differently, chrome A	+$0
KD	keyed differently, black A	+$0

Powered Wood Low Credenza, Doors with Drawers

FFD74A
FFD74K

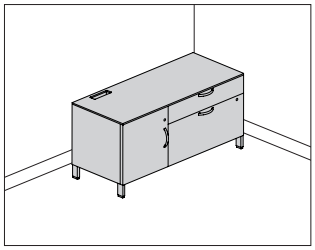

Product Information

Description

This powered credenza provides enclosed filing and storage and can be used freestanding, to support 1 end of a surface, or attached to a Canvas wall-based frame to support a frame run. It has a 3/8"-high laminate or veneer top and the choice of a laminate case and front, veneer case and front, or laminate case with veneer front. The credenza is available with 4"-high architectural feet with 1" leveling glides and has a positive interlock system that permits only 1 drawer to open at a time. Drawers have full-extension ball-bearing slides. The file drawer(s) accommodate side-to-side and front-to-back filing of letter-, legal, and A4-size hanging files. Connect™ power distributors with modular ends are ordered and installed separately.

Actual powered credenza widths are 47 3/4", 59 3/4", or 71 3/4"; actual depth is 19 7/8".

Notes

For additional product options, see Vary Easy Program in Appendices.

Arc pull option (A.) conforms to guidelines of Americans with Disabilities Act (ADA).

Grain direction is vertical on veneer and wood-grain laminate fronts.

Credenza with 4"-high foot option (4) and 3/8" thin top can be used to support a Canvas wall-based frame. Order support bracket, low credenza-to-frame (FT292.) separately.

When using credenza to support 1 end of a surface, order 1 of the following products separately:

- Surface support, low credenza, adjustable height (FT299.)
- Surface support, low credenza, fixed height (FT298.)

To cover adjacent credenzas with a single top, specify credenzas with no top option (NT) and order credenza top (FM890.) separately.

Order optional wood credenza shelf (FF892.) separately.

To provide temporary guest seating on a credenza, order cushion top (FF891.) separately.

Order the following products separately:

- Connect - S310 electrical unit with connect modular connection (Y1329.)
- Connect - power entry, 4-circuit (Y1351.)
- Connect - junction block to junction block jumper, 4-circuit (Y1353.)
- Connect - H-block connector, 4-circuit (Y1354.H)

Powered credenzas must be ganged together.

For keyed-alike locks, see Keyed-Alike Information in Appendices.

Dimensions

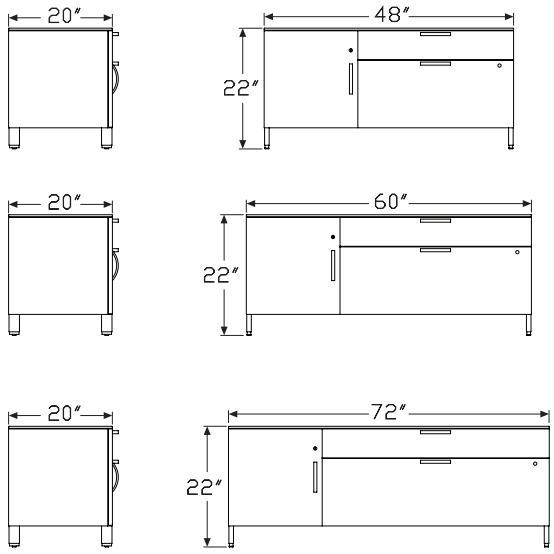

Powered Wood Low Credenza, Doors with Drawers *continued*

Specification Information

Step 1.

FFD74 A

Step 2. Pull Type

A. arc pull A
K. bar pull A

Step 3. Width

48 48" wide A
60 60" wide A
72 72" wide A

Step 4. Depth

20 20" deep A

Step 5. Base/Foot Height

4 4"-high foot A

Step 6. Configuration

For 48" wide (48)

CE 30" box/file left, single door right A
CF single door left, 30" box/file right A

For 60" wide (60)

CG 30" box/file left, double doors right A
CH double doors left, 30" box/file right A

For 72" wide (72)

CM 36" box/file left, double doors right A
CN double doors left, 36" box/file right A

Step 7. Case/Front Material

L laminate case/front A
C laminate case/veneer front A

Step 8. Top

NT no top A
03 3/8" laminate top A
04 3/8" veneer top A

Step 9. Power Access Location

For single door left, 30" box/file right (CF), double doors left, 30" box/file right (CH), or double doors left, 36" box/file right (CN)

L left center access A

For 30" box/file left, single door right (CE), 30" box/file left, double doors right (CG), or 36" box/file left, double doors right (CM)

R right center access A

Prices for Steps 1-9.

	4CELNTR	4CEL03R	4CEL04R	4CECNTR	4CEC03R	4CEC04R
FFD74A. 48 20	$3309	3450	3704	3446	3587	3843
	4CGLNTR	**4CGL03R**	**4CGL04R**	**4CGCNTR**	**4CGC03R**	**4CGC04R**
FFD74A. 60 20	$3731	3900	4184	3868	4036	4321
	4CMLNTR	**4CML03R**	**4CML04R**	**4CMCNTR**	**4CMC03R**	**4CMC04R**
FFD74A. 72 20	$3981	4206	4546	4117	4344	4684
	4CFLNTL	**4CFL03L**	**4CFL04L**	**4CFCNTL**	**4CFC03L**	**4CFC04L**
FFD74A. 48 20	$3309	3450	3704	3446	3587	3843
	4CHLNTL	**4CHL03L**	**4CHL04L**	**4CHCNTL**	**4CHC03L**	**4CHC04L**
FFD74A. 60 20	$3981	4206	4546	4117	4344	4684
	4CNLNTL	**4CNL03L**	**4CNL04L**	**4CNCNTL**	**4CNC03L**	**4CNC04L**
FFD74A. 72 20	$3981	4206	4546	4117	4344	4684
	4CELNTR	**4CEL03R**	**4CEL04R**	**4CECNTR**	**4CEC03R**	**4CEC04R**
FFD74K. 48 20	$3309	3450	3704	3446	3587	3843
	4CGLNTR	**4CGL03R**	**4CGL04R**	**4CGCNTR**	**4CGC03R**	**4CGC04R**
FFD74K. 60 20	$3731	3900	4184	3868	4036	4321
	4CMLNTR	**4CML03R**	**4CML04R**	**4CMCNTR**	**4CMC03R**	**4CMC04R**
FFD74K. 72 20	$3981	4206	4546	4117	4344	4684
	4CFLNTL	**4CFL03L**	**4CFL04L**	**4CFCNTL**	**4CFC03L**	**4CFC04L**
FFD74K. 48 20	$3309	3450	3704	3446	3587	3843
	4CHLNTL	**4CHL03L**	**4CHL04L**	**4CHCNTL**	**4CHC03L**	**4CHC04L**
FFD74K. 60 20	$3981	4206	4546	4117	4344	4684
	4CNLNTL	**4CNL03L**	**4CNL04L**	**4CNCNTL**	**4CNC03L**	**4CNC04L**
FFD74K. 72 20	$3981	4206	4546	4117	4344	4684

Powered Wood Low Credenza, Doors with Drawers *continued*

Step 10. Case Finish

Solid-Color Laminate

For 48" wide (48), 60" wide (60), or 72" wide (72) with laminate case/front (L), or laminate case/veneer front (C)

8Q	folkstone grey [A]	+$0
91	white [A]	+$0
CL	cool grey neutral [A]	+$0
LU	soft white [A]	+$0
WL	sandstone [A]	+$0
WN	warm grey neutral [A]	+$0

Wood-Grain Laminate

For 48" wide (48) or 60" wide (60) with laminate case/front (L), or laminate case/veneer front (C)

HM	natural maple [A]	+$0
HP	light anigre [A]	+$0
LBA	clear on ash	+$0
LBB	oak on ash	+$0
LBC	walnut on ash	+$0
LBD	dark brown walnut	+$0
LBR	phantom ecru	+$0
LBS	phantom cocoa	+$0
LBU	medium matte walnut	+$0
LBV	warm grey teak	+$0
LBE	medium red walnut	+$0
76	light brown walnut [A]	+$0
HX	aged cherry [A]	+$0
HY	walnut on cherry [A]	+$0

Step 11. Front Finish

Solid-Color Laminate

For laminate case/front (L)

8Q	folkstone grey [A]	+$0
91	white [A]	+$0
CL	cool grey neutral [A]	+$0
LU	soft white [A]	+$0
WL	sandstone [A]	+$0
WN	warm grey neutral [A]	+$0

Wood-Grain Laminate

For laminate case/front (L)

HM	natural maple [A]	+$0
HP	light anigre [A]	+$0
LBA	clear on ash	+$0
LBB	oak on ash	+$0
LBC	walnut on ash	+$0
LBD	dark brown walnut	+$0
LBR	phantom ecru	+$0
LBS	phantom cocoa	+$0
LBU	medium matte walnut	+$0
LBV	warm grey teak	+$0
LBE	medium red walnut	+$0
76	light brown walnut [A]	+$0
HX	aged cherry [A]	+$0
HY	walnut on cherry [A]	+$0

Wood Veneer

For laminate case/veneer front (C)

2U	light brown walnut [A]	+$0
40	dark brown walnut [A]	+$0
ED	aged cherry [A]	+$0
EK	medium red walnut [A]	+$0
EW	medium matte walnut [A]	+$0
ET	clear on ash [A]	+$0
EV	walnut on ash [A]	+$0
UL	natural maple [A]	+$0
UX	walnut on cherry [A]	+$0

Step 12. Top Finish

Solid-Color Laminate

For 3/8" laminate top (03)

8Q	folkstone grey [A]	+$0
91	white [A]	+$0
CL	cool grey neutral [A]	+$0
LU	soft white [A]	+$0
WL	sandstone [A]	+$0
WN	warm grey neutral [A]	+$0

Wood-Grain Laminate

For 3/8" laminate top (03)

HM	natural maple A	+$0
HP	light anigre A	+$0
LBA	clear on ash	+$0
LBB	oak on ash	+$0
LBC	walnut on ash	+$0
LBD	dark brown walnut	+$0
LBR	phantom ecru	+$0
LBS	phantom cocoa	+$0
LBU	medium matte walnut	+$0
LBV	warm grey teak	+$0
LBE	medium red walnut	+$0
76	light brown walnut A	+$0
HX	aged cherry A	+$0
HY	walnut on cherry A	+$0

Wood Veneer

For 3/8" veneer top (04)

2U	light brown walnut A	+$0
40	dark brown walnut A	+$0
ED	aged cherry A	+$0
EK	medium red walnut A	+$0
EW	medium matte walnut A	+$0
ET	clear on ash A	+$0
EV	walnut on ash A	+$0
UL	natural maple A	+$0
UX	walnut on cherry A	+$0

Step 13. Foot Finish

Metallic Paint

CN	metallic champagne A	+$0
EH	metallic bronze A	+$0
MS	metallic silver A	+$0

Sand Texture Paint

8Q	folkstone grey A	+$0
91	white A	+$0
98	studio white A	+$0
CL	cool grey neutral A	+$0
G1	graphite A	+$0
WL	sandstone A	+$0
WN	warm grey neutral A	+$0

Step 14. Pull Finish

For arc pull (A.)

NH	brushed nickel A	+$0
NK	black nickel A	+$0

Metallic Paint

For bar pull (K.)

CN	metallic champagne A	+$0
MS	metallic silver A	+$0

Sand Texture Paint

For bar pull (K.)

BK	black A	+$0
79	green apple A	+$15
MY3	yellow oxide A	+$15
RO	red A	+$15
TRQ	turquoise A	+$15

Smooth Paint

For bar pull (K.)

8Q	folkstone grey A	+$0
91	white A	+$0
98	studio white A	+$0
G1	graphite A	+$0
WL	sandstone A	+$0

Step 15. Counterweight

NO	no counterweight A	+$0
CB	counterweight A	+$70

Step 16. Lock Option

KA	keyed alike A	-$10
KC	keyed differently, chrome A	+$0
KD	keyed differently, black A	+$0

Support Bracket, Low Credenza-to-Frame

FT292.

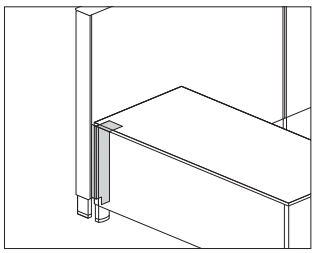

Product Information

Description

This bracket attaches between a Canvas wood or metal credenza and a frame. It allows the credenza to attach parallel or perpendicular to the frame, providing support to a frame run in place of a return wall or work surface support.

Notes

Bracket attaches credenza with no gap or with a 1″ gap from the front of the frame to allow room for cords and cables.

Support bracket attaches to low credenza with 4″ foot and thin top only.

Support bracket also attaches to back of a 60″ wide or wider low credenza where 2 units are joined.

Support bracket orientation (left or right) is determined by the frame orientation as you are facing the frame. Credenza can be attached parallel or perpendicular to a frame. Bracket attaches to the back left or back right of the low credenza.

Dimensions

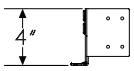

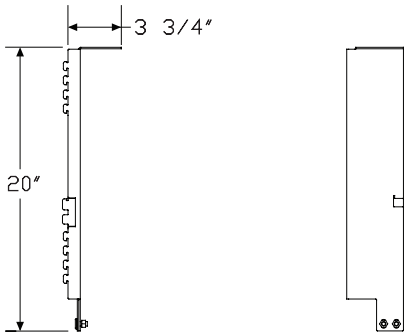

Specification Information

Step 1.

FT292.

Step 2. Storage Type

M	for use with metal low credenza with 4″ high foot
C	for use with wood low credenza with 4″ high foot A

Step 3. Frame Attachment Location

L	left end of frame
R	right end of frame

Step 4. Storage Attachment Position

N	no gap, for storage tight to wall
G	1″ gap, for cord drop

Prices for Steps 1-4.

			N	G
FT292.	**M**	**L**	$135	135
		R	$135	135
	C	**L**	$135	135
		R	$135	135

Step 5. Surface Finish

Sand Texture Paint

8Q	folkstone grey	+$0
91	white	+$0
98	studio white	+$0
BK	black	+$0
CL	cool grey neutral	+$0
G1	graphite	+$0
WL	sandstone	+$0
WN	warm grey neutral	+$0

Metallic Paint

CN	metallic champagne	+$0
EH	metallic bronze	+$0
MS	metallic silver	+$0

Powered Storage Ganging Bracket Kit PS900

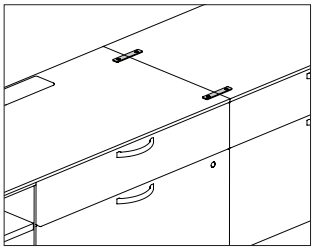

Product Information

Description

This kit has 2 brackets that attach to the case under the tops of 2 adjacent surfaces, ganging them together to provide stability and allowing electrical components to be routed from one case to another. Finish is black.

Notes

Power that is being routed from one case to another requires the cases be ganged together.

Single cases require counterweight to be specified.

Specification Information

Step 1.

PS900	A	$33

Powered Storage Cable Cover FPS910

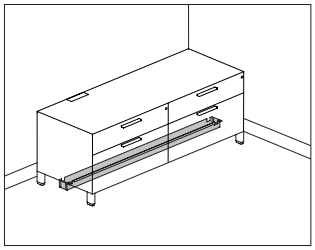

Product Information

Description

This cable cover attaches to a metal or wood Canvas Office Landscape® powered low credenza, and is available in 3 configurations: center, full-span, and side placement. It is used in conjunction with Connect™ components to comply with UL1286 listing. Finish is black.

Notes

Order the following products separately:

- Canvas powered metal low credenza (FMP72, FMP73, FMP74)
- Canvas powered wood low credenza (FFD72, FFD73, FFD74)
- Connect - S310 electrical unit with connect modular connection (Y1329.)
- Connect - power entry, 4-circuit (Y1351.)
- Connect - junction block to junction block jumper, 4-circuit (Y1353.)
- Connect - H-block connector, 4-circuit (Y1354.H)
- Powered storage distributor cover (FPS911.)

Dimensions

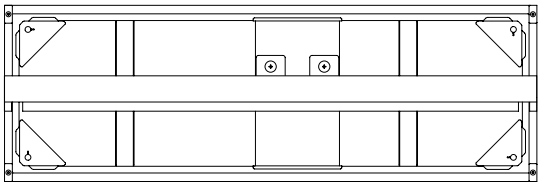

Full

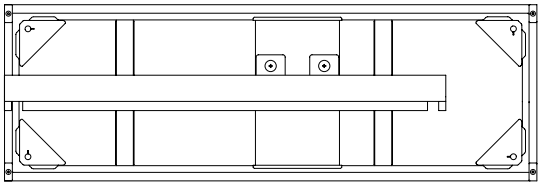

Side

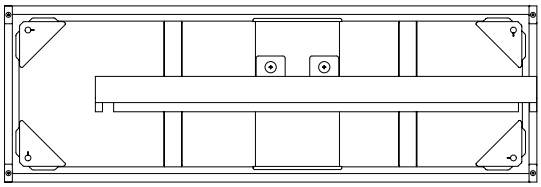

Side

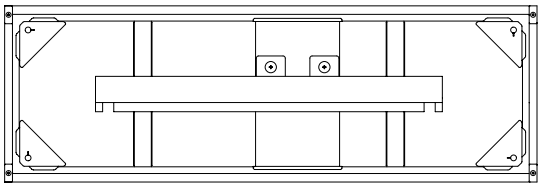

Center

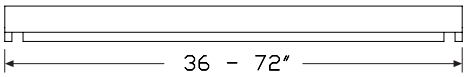

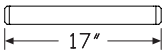

Cross bars for use with metal credenza only

Powered Storage Cable Cover

continued

Specification Information

Step 1.

FPS910. A

Step 2. Material

F	for use with wood powered low credenza A
M	for use with metal powered low credenza A

Step 3. Case Width

48	48″ wide A
60	60″ wide A
66	66″ wide A
72	72″ wide A

Step 4. Configuration

C	center A
F	full A
S	side A

Prices for Steps 1-4.

			C	F	S
FPS910.	**F**	**48**	$101	101	101
		60	$125	125	125
		66	$125	125	125
		72	$122	122	125
	M	**48**	$213	213	213
		60	$236	236	236
		66	$236	236	236
		72	$236	236	236

Powered Storage Distributor Cover FPS911

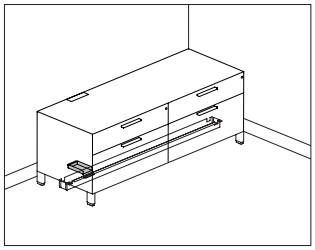

Product Information

Description

This distributor cover attaches to a metal or wood Canvas Office Landscape® powered low credenza. It is used in conjunction with a powered storage cable cover and Connect™ components to comply with UL1286 listing. Finish is black.

Notes

Order the following products separately:

- Canvas powered metal low credenza (FMP72, FMP73, FMP74)
- Canvas powered wood low credenza (FFD72, FFD73, FFD74)
- Connect - S310 electrical unit with connect modular connection (Y1329.)
- Connect - power entry, 4-circuit (Y1351.)
- Connect - junction block to junction block jumper, 4-circuit (Y1353.)
- Connect - H-block connector, 4-circuit (Y1354.H)
- Powered storage cable cover (FPS910.)

Dimensions

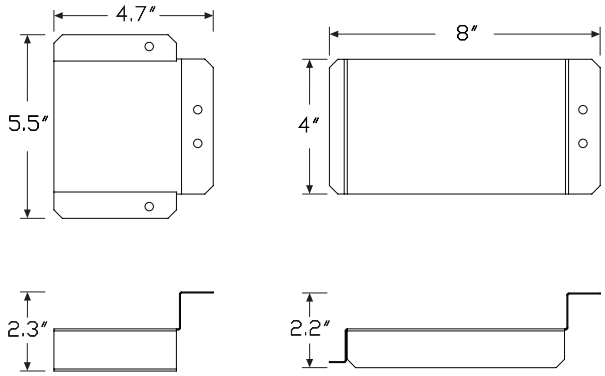

Specification Information

Step 1.

FPS911. A

Step 2. Material

F	for use with wood powered low credenza	A
M	for use with metal powered low credenza	A

Prices for Steps 1-2.

FPS911.	**F**	$53
	M	$53

Connect™ - S310 Electrical Unit with Connect Modular Connection Y1329.

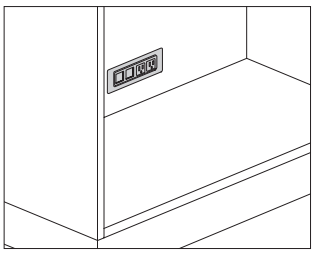

Product Information

Description

This electrical distributor provides power to a lateral file, low credenza, or storage case with a Connect™ 4-circuit modular connector. It can be top surface mounted flush or vertically mounted in the false back of a cabinet. A voice/data adapter kit is included, allowing the data openings to accept various manufacturers' couplers and jacks. Attachment hardware is included. Product is UL listed.

Notes

Field cutting of surface may be required. Information on surface cutout size is included on instruction sheet.

Silver option (0I) and white option (0J) have painted metal trim with white plastic simplex/data interiors. Black option (0H) has black painted trim with black plastic simplex/data interior.

Modular electrical connectors can only connect to Connect 4-circuit modular power system.

Order the following products separately:

- Canvas powered metal low credenza (FMP72A., FMP72K., FMP73A., FMP73K., FMP74A., FMP74K.)
- Canvas powered wood low credenza (FFD72A., FFD72K., FFD73A., FFD73K., FFD74A., FFD74K.)
- Meridian powered storage case (PSC-, PS6-, PSAM-, PSAV-, PSKM-, PSKV-)
- Meridian powered storage lateral file (PS26-, PS2AM, PS2AV, PS2KM, PS2KV)
- Connect - power entry, 4-circuit (Y1351.)
- Connect - junction block to junction block jumper, 4-circuit (Y1353.)
- Connect - block connector, 4-circuit (Y1354.)
- Other Connect 4-circuit modular power components as required

For Canvas powered storage, order Connect - conduit clamp (Y1339.) separately.

Dimensions

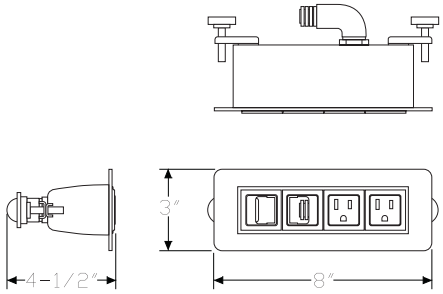

Specification Information

Step 1.

Y1329.

Step 2. Configuration

3	2 simplex receptacles, 2 data openings
8	3 simplex receptacles, 1 data opening

Step 3. Power Type

E	4 circuit circuit 1
F	4 circuit circuit 2
G	4 circuit circuit 3
H	4 circuit circuit 4

Step 4. Cord/Conduit Length

02	2' conduit
03	3' conduit
04	4' conduit
06	6' conduit
10	10' conduit

Prices for Steps 1-4.

			02	03	04	06	10
Y1329.	**3**	**E**	$344	354	363	386	427
		F	$344	354	363	386	427
		G	$344	354	363	386	427
		H	$344	354	363	386	427
	8	**E**	$360	369	383	401	443
		F	$360	369	383	401	443
		G	$360	369	383	401	443
		H	$360	369	383	401	443

Step 5. Finish

0H	black	+$0
0I	silver	+$0
0J	white	+$0

Connect™-Power Entry, 4-Circuit Y1351.

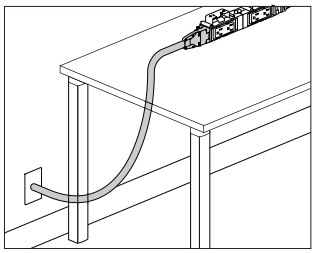

Product Information

Description

This power entry connects a building's electrical from a wall, floor, or column to the end of a 4-circuit dual junction block power kit or junction block and distributes up to 4 20-amp circuits. UL 183 listed, CUL Certified.

Notes

Connect™ modular power products are not compatible with electrical components used in Herman Miller systems or desking product lines.

Power entry can be field cut to the appropriate length.

For San Francisco, specify 3/8" flex metallic conduit option (C).

Finish color on liquid tight conduit is black. Finish color on metallic conduit is silver.

A licensed electrician must wire the power entry to the building's electrical system.

Dimensions

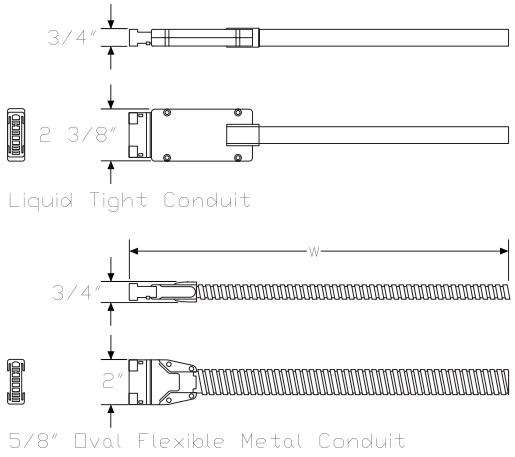

Specification Information

Step 1.

Y1351.

Step 2. Length

06	6' long
12	12' long
18	18' long
24	24' long

Step 3. Conduit Type

L	liquid tight conduit
C	3/8" flex metallic conduit

Prices for Steps 1-3.

		L	C
Y1351.	**06**	$158	158
	12	$226	226
	18	$296	296
	24	$380	380

Connect™-Junction Block to Junction Block Jumper, 4-Circuit Y1353.

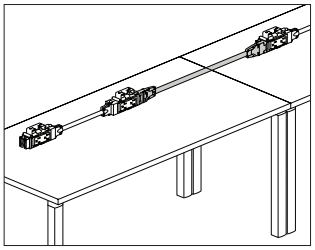

Product Information

Description

This power jumper distributes up to 4 20-amp circuits between 2 power kits or junction blocks and is available as adjustable or non-adjustable. The adjustable jumper allows 1 end of the jumper to extend an additional 3" when connecting to components under an adjacent desk or table. UL 183 listed, CUL Certified.

Notes

Connect™ modular power products are not compatible with electrical components used in Herman Miller systems or desking product lines.

When routing power to an adjacent desk or table, surfaces must be ganged together. Order ganging bracket kit (Y1338.) separately.

When connecting dual junction block power kits (Y1350.) between adjacent surfaces in a linear run, specify 24"-wide jumper.

When connecting dual junction block power kits (Y1350.) at the outside corner of 2 24"-deep surfaces at 90°, specify 42"-wide jumper.

When connecting dual junction block power kits (Y1350.) at the outside corner of 2 30"-deep surfaces at 90°, specify 48"-wide jumper.

When connecting dual junction block power kits (Y1350.) at the outside corner of 1 30"-deep and 1 24"-deep surface, specify 48"-wide jumper.

When connecting dual junction block power kits (Y1350.) at the inside corner of 2 24"- or 30"-deep surfaces, specify 30"-wide jumper.

Finish on 5/8" oval metallic conduit is silver.

Order the following products separately:

- Conduit clamps (Y1339.)
- Dual junction block power kit, 4-circuit (Y1350.) or junction block, 4-circuit (Y1358.)
- Duplex receptacle, 4-circuit (Y1355.) - for junction block, 4-circuit
- Junction block bracket, 4-circuit (Y1357.) - for junction block, 4-circuit
- Power entry, 4-circuit (Y1351.)

Dimensions

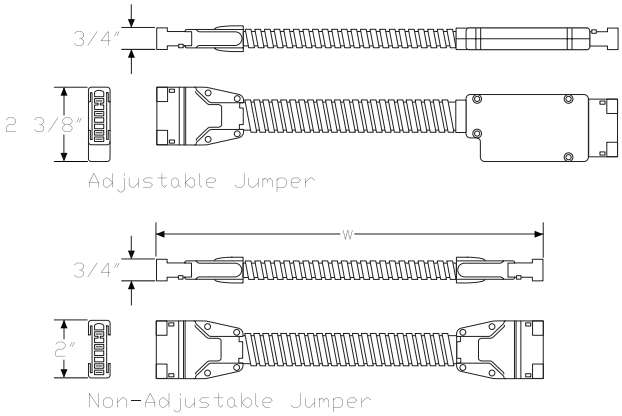

Connect™-Junction Block to Junction Block Jumper, 4-Circuit

continued

Specification Information

Step 1.

Y1353.

Step 2. Width

12	12″ wide
18	18″ wide
24	24″ wide
30	30″ wide
36	36″ wide
42	42″ wide
48	48″ wide
54	54″ wide
60	60″ wide
66	66″ wide
72	72″ wide
78	78″ wide
84	84″ wide
90	90″ wide
108	108″ wide
120	120″ wide
132	132″ wide
144	144″ wide

Step 3. Type

A	adjustable jumper
N	nonadjustable jumper

Prices for Steps 1-3.

		A	N
Y1353.	**12**	$80	80
	18	$85	85
	24	$92	92
	30	$98	98
	36	$103	103
	42	$108	108
	48	$115	115
	54	$121	121
	60	$127	127
	66	$132	132
	72	$137	137
	78	$144	144
	84	$149	149
	90	$156	156
	108	$173	173
	120	$183	183
	132	$196	196
	144	$208	208

Connect™-Block Connector, 4-Circuit Y1354.

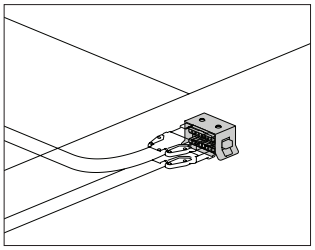

Product Information

Description

This block connects components together to distribute power. The H-block connector connects jumpers together at 2-, 3-, and 4-way connection points, or distributes power from a power entry to multiple components. The receptacle-to-receptacle connectors connect 2 junction blocks together. Finish is black. Attachment hardware included. UL 183 listed, CUL Certified.

Notes

Connect™ modular power products are not compatible with electrical components used in Herman Miller systems or desking product lines. When routing power to an adjacent desk or table, surfaces must be ganged together. Order ganging bracket kit (Y1338.) separately.

Dimensions

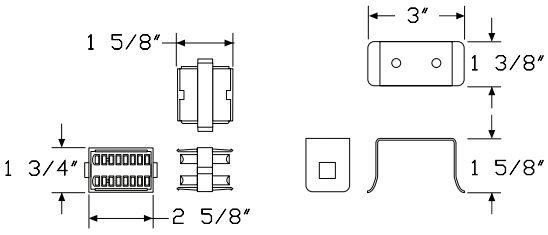

H-Block H-Block Bracket

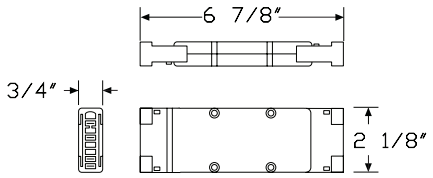

Receptacle-to-Receptacle Block Connector

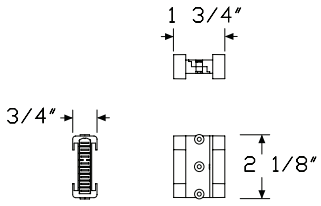

Short Receptacle-to-Receptacle Block Connector

Specification Information

Step 1.

Y1354.

Step 2. Connector Type

H	H-block connector
S	short receptacle-to-receptacle block connector A
R	receptacle-to-receptacle block connector

Prices for Steps 1-2.

Y1354.	**H**	$44
	S	$54
	R	$56

Credenza Top for Wood Credenza FF890.

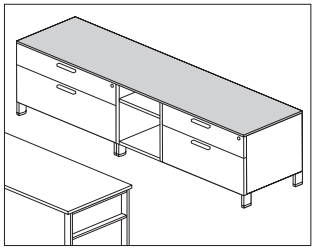

Product Information

Description

This 3/8"-high laminate or veneer credenza top can be used to cover a single credenza or 2 credenzas ganged side by side. Attachment hardware included.

Notes

For additional product options, see Vary Easy Program® in Appendices.

Dimensions

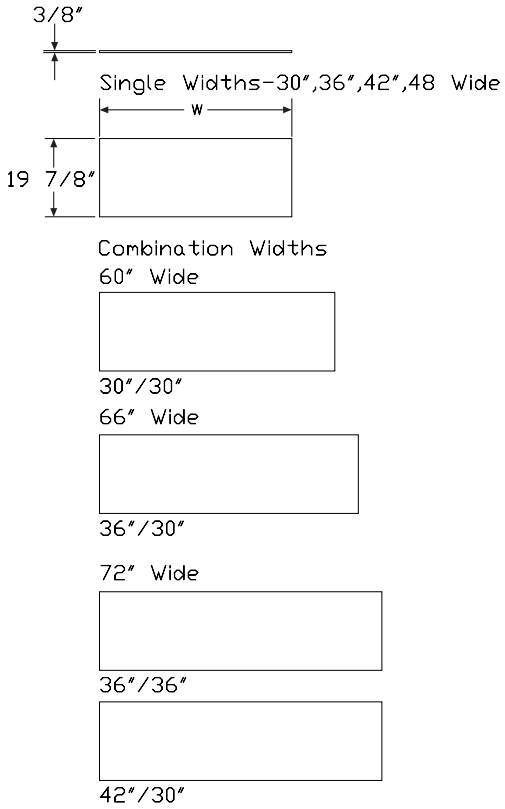

Specification Information

Step 1.

FF890.20 A

Step 2. Width

30	30" wide A
36	36" wide A
42	42" wide A
48	48" wide A
60	60" wide A
66	66" wide A
72	72" wide A

Step 3. Top Material

03	3/8" laminate top A
04	3/8" veneer top A

Prices for Steps 1-3.

		03	04
FF890.20	**30**	$271	648
	36	$308	729
	42	$352	772
	48	$374	825
	60	$459	945
	66	$502	1025
	72	$525	1063

Step 4. Top Finish

Solid-Color Laminate

For 3/8" laminate top (03)

8Q	folkstone grey A	+$0
91	white A	+$0
98	studio white	+$0
CL	cool grey neutral A	+$0
LU	soft white A	+$0
WL	sandstone A	+$0
WN	warm grey neutral A	+$0

Linen Laminate

For 3/8" laminate top (03)

LBM	crisp linen	+$0
LBN	classic linen	+$0
LBP	casual linen	+$0

Credenza Top for Wood Credenza

continued

Mesh Laminate		
For 3/8" laminate top (03)		
LBK	pewter mesh	+$0
LBL	steel mesh	+$0

Twill Laminate		
For 3/8" laminate top (03)		
LBF	neutral twill	+$0
LBG	sarum twill	+$0
LBH	earthen twill	+$0
LBJ	graphite twill	+$0
LBQ	white twill	+$0

Wood-Grain Laminate		
For 3/8" laminate top (03)		
HM	natural maple A	+$0
HP	light anigre A	+$0
LBA	clear on ash	+$0
LBR	phantom ecru	+$0
LBS	phantom cocoa	+$0
LBU	medium matte walnut	+$0
LBV	warm grey teak	+$0
LBB	oak on ash	+$0
LBC	walnut on ash	+$0
LBD	dark brown walnut	+$0
LBE	medium red walnut	+$0
76	light brown walnut A	+$0
HX	aged cherry A	+$0
HY	walnut on cherry A	+$0

Wood Veneer		
For 3/8" veneer top (04)		
2U	light brown walnut A	+$0
40	dark brown walnut A	+$0
ED	aged cherry A	+$0
EK	medium red walnut A	+$0
EW	medium matte walnut A	+$0
ET	clear on ash A	+$0
EU	oak on ash A	+$0
EV	walnut on ash A	+$0
UL	natural maple A	+$0
UX	walnut on cherry A	+$0

Credenza Cushion Top FF891.

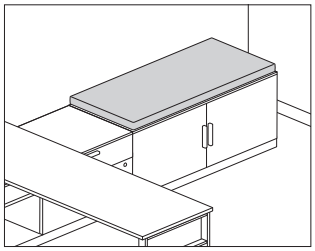

Product Information

Description

This cushion attaches to the top of a metal or wood credenza to provide temporary guest seating. Attachment hardware included.

Notes

Cushion accepts Customer's Own Material (COM). Yardage is estimated for nondirectional, 54"-wide fabrics. Order 1 yard of fabric per cushion. For odd number of cushions, round up to next full yard. For information on multiple quantities or directional fabrics, contact COM Department. See Order Information in Appendices.

Dimensions

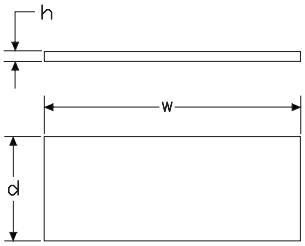

Specification Information

Step 1.

FF891. A

Step 2. Height

01 1" high A
02 2" high A

Step 3. Depth

20 20" deep A

Step 4. Width

24 24" wide A
30 30" wide A
36 36" wide A
42 42" wide A
48 48" wide A

Prices for Steps 1-4.

		24	30	36	42	48
FF891.	**01 20**	$247	265	284	295	310
	02 20	$296	322	349	370	389

Step 5. Fabric

See application chart and textiles list for fabric usage and numbers. First 2 digits of number indicate fabric line; remaining digit(s) indicate fabric color.

Price Category 1	+$0
Price Category 2	+$102
Price Category 3	+$123
Price Category 4	+$151
Price Category 7 A	+$206
Price Category 9	+$1425
Price Category E	+$150
Price Category G	+$251
Price Category H	+$305

Credenza Top for Wood Credenza, with Pari Screen, Storage Attached

FF889.

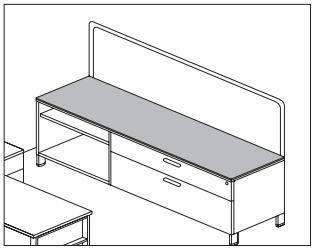

Product Information

Description

This 3/8"-high laminate or veneer credenza top covers a single credenza or 2 credenzas ganged side by side. Thin top has predrilled holes to accommodate Pari screen attachment bayonets. Thin top attachment hardware included.

Notes

Order Pari screen (FV360.) separately.

Specify thin top width to match overall width of credenza.

For configuration information, see Pari Screen planning guide.

Dimensions

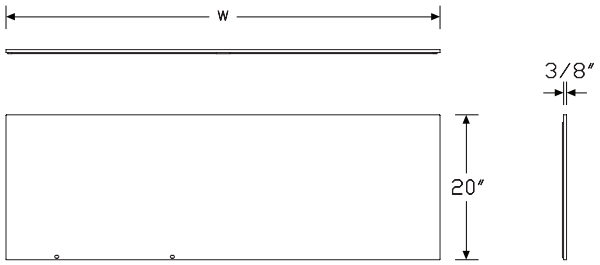

Specification Information

Step 1.

FF889.20 A

Step 2. Width

30 30" wide A
36 36" wide A
42 42" wide A
48 48" wide A
60 60" wide A
66 66" wide A
72 72" wide A

Step 3. Top Material

03 3/8" laminate top A
04 3/8" veneer top A

Step 4. Configuration

For 30" wide (30), 36" wide (36), or 42" wide (42)

FW full width screen A

For 48" wide (48)

AA 30" screen left A
AB 30" screen right A
FW full width screen A

For 60" wide (60)

AA 30" screen left A
AB 30" screen right A
AC 36" screen left A
AD 36" screen right A
FW full width screen A

For 66" wide (66) or 72" wide (72)

AC 36" screen left A
AD 36" screen right A
AE 42"screen left A
AF 42" screen right A
FW full width screen A

Prices for Steps 1-4.

			AA	AB	AC	AE	AD	AF
FF889.20	**48**	**03**	$381	381	—	—	—	—
		04	$834	834	—	—	—	—
	60	**03**	$470	470	470	—	470	—
		04	$954	954	954	—	954	—

Credenza Top for Wood Credenza, with Pari Screen, Storage Attached *continued*

66	**03**	—	—	$511	511	511	511
	04	—	—	$1037	1037	1037	1037
72	**03**	—	—	$533	533	533	533
	04	—	—	$1068	1068	1068	1068

			FW
FF889.20	**30**	**03**	$277
		04	$657
	36	**03**	$314
		04	$736
	42	**03**	$360
		04	$782
	48	**03**	$381
		04	$834
	60	**03**	$470
		04	$954
	66	**03**	$511
		04	$1037
	72	**03**	$533
		04	$1068

Step 5. Top Finish

For 3/8" laminate top (03)

8Q	folkstone grey A	+$0
91	white A	+$0
98	studio white A	+$0
CL	cool grey neutral A	+$0
LU	soft white A	+$0
WL	sandstone A	+$0
WN	warm grey neutral A	+$0

For 3/8" laminate top (03)

76	light brown walnut A	+$0
HM	natural maple A	+$0
HP	light anigre A	+$0
HX	aged cherry A	+$0
HY	walnut on cherry A	+$0
LBA	clear on ash A	+$0
LBR	phantom ecru A	+$0
LBS	phantom cocoa A	+$0
LBU	medium matte walnut A	+$0
LBV	warm grey teak A	+$0
LBB	oak on ash A	+$0
LBC	walnut on ash A	+$0
LBD	dark brown walnut A	+$0
LBE	medium red walnut A	+$0

For 3/8" laminate top (03)

LBM	crisp linen A	+$0
LBN	classic linen A	+$0
LBP	casual linen A	+$0

For 3/8" laminate top (03)

LBK	pewter mesh A	+$0
LBL	steel mesh A	+$0

For 3/8" laminate top (03)

LBF	neutral twill A	+$0
LBG	sarum twill A	+$0
LBH	earthen twill A	+$0
LBJ	graphite twill A	+$0
LBQ	white twill A	+$0

For 3/8" veneer top (04)

2U	light brown walnut A	+$0
40	dark brown walnut A	+$0
ED	aged cherry A	+$0
EK	medium red walnut A	+$0
EW	medium matte walnut A	+$0
ET	clear on ash A	+$0
EU	oak on ash A	+$0
EV	walnut on ash A	+$0
UL	natural maple A	+$0
UX	walnut on cherry A	+$0

Pari Screen, Storage Attached FV360.

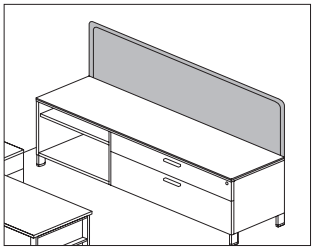

Product Information

Description

This tackable fabric screen attaches to a Canvas low credenza using the thin top and provides boundary with a tackable surface. Attachment hardware included.

Notes

Order credenza thin top separately:

- Credenza top for wood credenza (FF889.)
- Credenza top for metal credenza (FM889.)

Predrilled holes near back edge of credenza thin top allow for bayonets to extend up to support the screen.

Works with standard and powered Canvas credenzas.

Screen accepts Customer's Own Material (COM). Yardage is estimated for nondirectional 54"-wide fabrics.

For vertical fabric direction (T):

Height—Yardage

24—0.95
30—1.14
36—1.32

For horizontal fabric direction (R), for 42" high:

Width—Yardage

24—0.95
30—1.14
36—1.32
42—1.51
48—1.71
60—2.07
66—2.27
72—2.46

For horizontal fabric direction (R), for 46" high and 53" high:

Width—Yardage

24—1.90
30—2.27
36—2.66
42—3.02
48—3.41
60—4.17
66—4.54
72—4.92

For information on multiple quantities or directional fabrics, contact COM Department. See Order Information in Appendices.

Dimensions

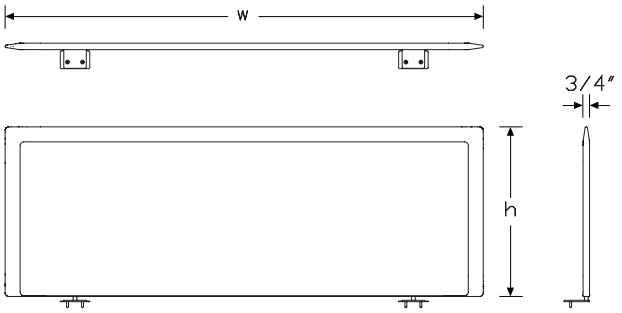

Pari Screen, Storage Attached

continued

Specification Information

Step 1.

FV360. A

Step 2. Attachment

CS Canvas credenza attached, single A

CB Canvas credenza attached, back to back A

Step 3. Height

42 42" high A

46 46" high A

53 53" high A

Step 4. Width

30 30" wide A

36 36" wide A

42 42" wide A

48 48" wide A

60 60" wide A

66 66" wide A

72 72" wide A

Step 5. Surface Material

For 30" wide (30), 36" wide (36), 42" wide (42), or 48" wide (48)

R tackable fabric, horizontal A

T tackable fabric A

For 60" wide (60), 66" wide (66), or 72" wide (72)

R tackable fabric, horizontal A

Prices for Steps 1-5.

		30R	30T	36R	36T	42R	42T
FV360. CS	**42**	$743	743	773	773	819	819
	46	$773	773	864	864	909	909
	53	$909	909	955	955	1106	1106
CB	**42**	$743	743	773	773	819	819
	46	$773	773	864	864	909	909
	53	$909	909	955	955	1106	1106

		48R	48T	60R	66R	72R
FV360. CS	**42**	$955	955	1091	1111	1137
	46	$1000	1000	1137	1202	1228
	53	$1182	1182	1319	1384	1409
CB	**42**	$955	955	1091	1111	1137
	46	$1000	1000	1137	1202	1228
	53	$1182	1182	1319	1384	1409

Step 6. Fabric

	30	36	42	48	60
Price Category 1	+$0	0	0	0	0
Price Category 2	+$38	38	38	31	31
Price Category 3	+$90	90	90	74	74
Price Category 4	+$156	156	156	127	127

	66	72
Price Category 1	+$0	0
Price Category 2	+$38	38
Price Category 3	+$90	90
Price Category 4	+$156	156

Wood Credenza Shelf FF892.

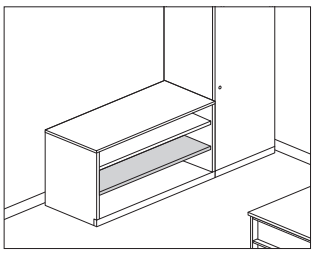

Product Information

Description

This laminate or veneer shelf fits into a wood credenza to provide additional shelf storage. Shelf attachment pins included.

Dimensions

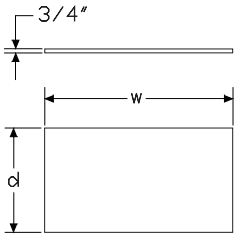

Specification Information

Step 1.

FF892. A

Step 2. Credenza Type

A for credenza, open or credenza, with doors A
B for credenza, open with drawers A
C for credenza, doors with drawers A

Step 3. Width

For credenza, open or credenza, with doors (A)

21 21" wide A
24 24" wide A
3A 30" wide, for 30"-wide credenza A
3B 30" wide, for 60"-wide credenza A
36 36" wide A

For credenza, open with drawers (B)

18 18" wide A
24 24" wide A
30 30" wide A
36 36" wide A

For credenza, doors with drawers (C)

18 18" wide A
30 30" wide A
36 36" wide A

Step 4. Depth

20 20" deep A

Step 5. Surface Material

L laminate A
W veneer A

Prices for Steps 1-5.

			20L	20W
FF892.	**A**	**21**	$183	275
		24	$194	308
		24	$194	308
		3A	$229	377
		3B	$229	377
		36	$263	445

B	**18**	$173	241
	24	$194	308
	24	$194	308
	30	$229	377
	36	$263	445
C	**18**	$173	241
	30	$229	377
	36	$263	445

Step 6. Surface Finish

Solid-Color Laminate

For laminate (L)

8Q	folkstone grey A	+$0
91	white A	+$0
98	studio white	+$0
CL	cool grey neutral A	+$0
LU	soft white A	+$0
WL	sandstone A	+$0
WN	warm grey neutral A	+$0

Linen Laminate

For laminate (L)

LBM	crisp linen	+$0
LBN	classic linen	+$0
LBP	casual linen	+$0

Mesh Laminate

For laminate (L)

LBK	pewter mesh	+$0
LBL	steel mesh	+$0

Twill Laminate

For laminate (L)

LBF	neutral twill	+$0
LBG	sarum twill	+$0
LBH	earthen twill	+$0
LBJ	graphite twill	+$0
LBQ	white twill	+$0

Wood-Grain Laminate

For laminate (L)

HM	natural maple A	+$0
HP	light anigre A	+$0
LBA	clear on ash	+$0
LBR	phantom ecru	+$0
LBS	phantom cocoa	+$0
LBU	medium matte walnut	+$0
LBV	warm grey teak	+$0
LBB	oak on ash	+$0
LBC	walnut on ash	+$0
LBD	dark brown walnut	+$0
LBE	medium red walnut	+$0
76	light brown walnut A	+$0
HX	aged cherry A	+$0
HY	walnut on cherry A	+$0

For veneer (W)

2U	light brown walnut A	+$0
40	dark brown walnut A	+$0
ED	aged cherry A	+$0
EK	medium red walnut A	+$0
EW	medium matte walnut A	+$0
ET	clear on ash A	+$0
EU	oak on ash A	+$0
EV	walnut on ash A	+$0
UL	natural maple A	+$0
UX	walnut on cherry A	+$0

Canvas Cabinet/Wall Attachment Bracket FV692.

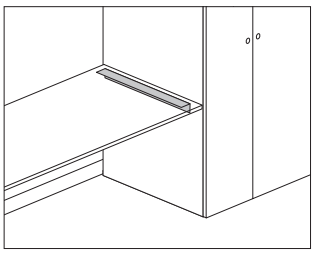

Product Information

Description

This bracket attaches 1 end of a surface to a Canvas wood vertical storage cabinet or architectural wall, eliminating the need for a support leg. Finish is black. Attachment hardware included.

Notes

Supports a 20″ or 24″ deep surface.

20″ deep surface can be attached to a 20″ or 24″ deep wood vertical storage cabinet or architectural wall.

24″ deep surface can be attached to a 24″ deep wood vertical storage cabinet or architectural wall.

Dimensions

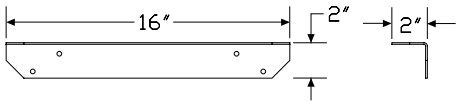

Specification Information

Step 1.

FV692.	$68

Bookcase Hutch, Storage Attached FV454.

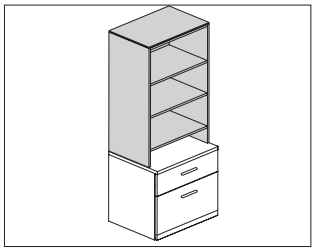

Product Information

Description

This bookcase hutch attaches onto a Canvas wood low or high credenza surface with 1¼" top to provide open or enclosed storage. It is available in 2 heights: 57" high and 68" high. 16"-wide and 24"-wide hutches have a single door hinged left or right; 30"-, 36"- and 42"-wide hutches have symmetrical doors. Bookcase hutch doors have touch latches and optional locks.

Notes

Align like components next to like units: Finished case units with other finished case units, thin top units with other thin top units, 2¼" base storage units with other 2¼" base storage, and 4" foot storage with other 4" foot storage.

Hutch width must match width of lower storage unit with 1¼" top.

Hutch case is available in laminate or veneer; doors in laminate, veneer, or back-painted glass; ⅜" thin top in laminate or veneer.

Glass doors are back-painted and writable with dry-erase marker. Glass doors cannot lock.

Grain direction is vertical on veneer, wood-grain, and patterned laminate case and fronts.

Storage compartment has adjustable shelves that adjust in 1¼" increments.

Hutch matches style of wood overhead storage in FV43 series.

Hutch is available with a finished case top (T), ⅜"-thick laminate top (3), and ⅜"-thick veneer top (4). The hutch with finished case top aligns with the top of the bead on a frame attached tile. Adding a thin top increases overall height of hutch ½".

Actual case depths are 14¾" (15) and 19⅞" (20).

- 15" deep (15) matches depth of overhead storage unit (FV43x.)
- 20" deep (20) matches depth of Canvas lower storage components

Actual case widths are 15⅝" (16), 23⅞" (24), 29⅞" (30), 35⅞" (36), and 41⅞" (42).

- 15⅝" wide (16) matches Canvas wood pedestal drawer body.

Shelves vary based on height and base attachment option:
57" low credenza (2¼" base and 4" foot)—2 adjustable shelves
57" high credenza (2¼" base)—1 adjustable shelf
68" low credenza (2¼" base and 4" foot)—3 adjustable shelves
68" high credenza (2¼" base)—2 adjustable shelves

Dimensional illustration does not include all possible configurations.

For keyed-alike locks, see Keyed-Alike Information in appendices.

Dimensions

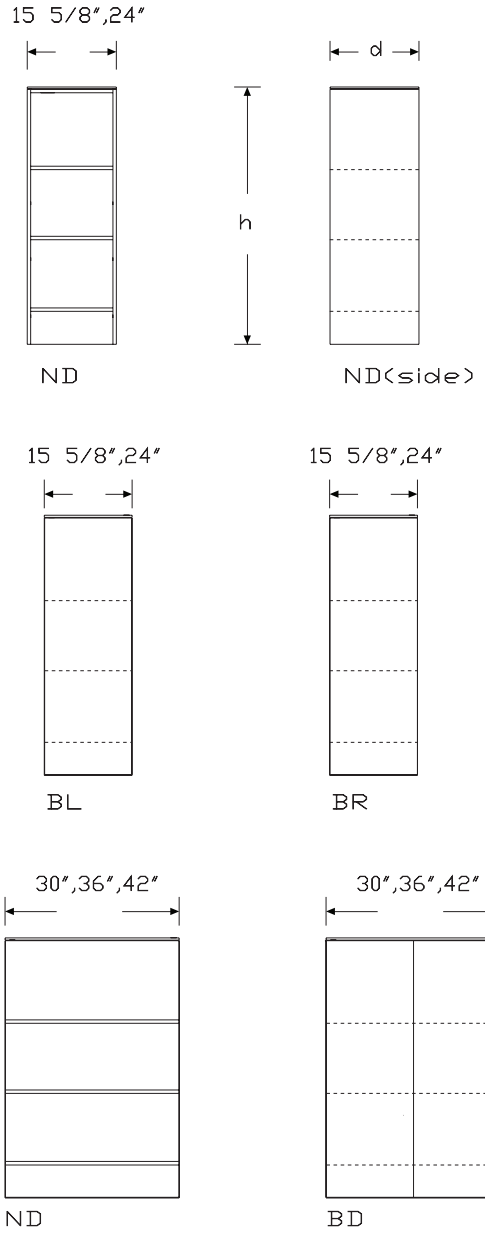

Bookcase Hutch, Storage Attached *continued*

Specification Information

Step 1.

FV454. A

Step 2. Base Attachment

LC2	low credenza, 2¼"-high base with 1¼" top A	+$150
LC4	low credenza, 4"-high foot with 1¼" top A	+$150
HC2	high credenza, 2¼"-high base with 1¼" top A	+$0

Step 3. Datum Height

6	57" high A	+$450
7	68" high A	+$600

Step 4. Width

16	15⅝" wide A	+$350
24	24" wide A	+$400
30	30" wide A	+$450
36	36" wide A	+$550
42	42" wide A	+$750

Step 5. Depth

15	15" deep A	+$200
20	20" deep A	+$250

Step 6. Configuration

For 15⅝" wide (16) or 24" wide (24)

ND	open bookcase A	+$0
BL	bookcase with left-hinged door A	+$250
BR	bookcase with right-hinged door A	+$250

For 30" wide (30), 36" wide (36), or 42" wide (42)

ND	open bookcase A	+$0
BD	bookcase with two symmetrical doors A	+$325

Step 7. Case Material

For 15⅝" wide (16)

L	laminate A	+$0
W	veneer A	+$580

For 24" wide (24)

L	laminate A	+$0
W	veneer A	+$956

For 30" wide (30)

L	laminate A	+$0
W	veneer A	+$1217

For 36" wide (36)

L	laminate A	+$0
W	veneer A	+$1493

For 42" wide (42)

L	laminate A	+$0
W	veneer A	+$1770

Step 8. Door Material

For 15⅝" wide (16) with bookcase with left-hinged door (BL) or bookcase with right-hinged door (BR)

L	laminate A	+$0
W	veneer A	+$1035
G	glass A	+$881

For 24" wide (24) with bookcase with left-hinged door (BL) or bookcase with right-hinged door (BR)

L	laminate A	+$0
W	veneer A	+$1955
G	glass A	+$1381

For 30" wide (30) with bookcase with two symmetrical doors (BD)

L	laminate A	+$200
W	veneer A	+$2438
G	glass A	+$1762

For 36" wide (36) with bookcase with two symmetrical doors (BD)

L	laminate A	+$408
W	veneer A	+$2863
G	glass A	+$2143

For 42" wide (42) with bookcase with two symmetrical doors (BD)

L	laminate A	+$618
W	veneer A	+$3628
G	glass A	+$2500

Step 9. Top

T	finished case top A	+$0
3	⅜" laminate thin top A	+$150
4	⅜" veneer thin top A	+$300

Bookcase Hutch, Storage Attached *continued*

Step 10. Lock

For laminate (L) or veneer (W)

L	lock A	+$0
N	no lock A	+$0

For glass (G)

N	no lock A	+$0

Step 11. Case/Edge Finish

For laminate (L)

76	light brown walnut A	+$0
8Q	folkstone grey A	+$0
91	white A	+$0
98	studio white A	+$0
CL	cool grey neutral A	+$0
HM	natural maple A	+$0
HP	light anigre A	+$0
HX	aged cherry A	+$0
HY	walnut on cherry A	+$0
LA	light ash A	+$0
LBA	clear on ash A	+$0
LBR	phantom ecru A	+$0
LBS	phantom cocoa A	+$0
LBU	medium matte walnut A	+$0
LBV	warm grey teak A	+$0
LBB	oak on ash A	+$0
LBC	walnut on ash A	+$0
LBD	dark brown walnut A	+$0
LBE	medium red walnut A	+$0
LBF	neutral twill A	+$0
LBG	sarum twill A	+$0
LBH	earthen twill A	+$0
LBJ	graphite twill A	+$0
LBK	pewter mesh A	+$0
LBL	steel mesh A	+$0
LBM	crisp linen A	+$0
LBN	classic linen A	+$0
LBP	casual linen A	+$0
LBQ	white twill A	+$0
LU	soft white A	+$0
WL	sandstone A	+$0
WN	warm grey neutral A	+$0

For veneer (W)

2U	light brown walnut A	+$0
40	dark brown walnut A	+$0
ED	aged cherry A	+$0
EK	medium red walnut A	+$0
EW	medium matte walnut A	+$0
ET	clear on ash A	+$0
EU	oak on ash A	+$0
EV	walnut on ash A	+$0
UL	natural maple A	+$0
UX	walnut on cherry A	+$0

Step 12. Door/Edge Finish

For laminate (L)

76	light brown walnut A	+$0
8Q	folkstone grey A	+$0
91	white A	+$0
98	studio white A	+$0
CL	cool grey neutral A	+$0
HM	natural maple A	+$0
HP	light anigre A	+$0
HX	aged cherry A	+$0
HY	walnut on cherry A	+$0
LA	light ash A	+$0
LBA	clear on ash A	+$0
LBR	phantom ecru A	+$0
LBS	phantom cocoa A	+$0
LBU	medium matte walnut A	+$0
LBV	warm grey teak A	+$0
LBB	oak on ash A	+$0
LBC	walnut on ash A	+$0
LBD	dark brown walnut A	+$0
LBE	medium red walnut A	+$0
LBF	neutral twill A	+$0
LBG	sarum twill A	+$0
LBH	earthen twill A	+$0
LBJ	graphite twill A	+$0
LBK	pewter mesh A	+$0
LBL	steel mesh A	+$0
LBM	crisp linen A	+$0
LBN	classic linen A	+$0
LBP	casual linen A	+$0
LBQ	white twill A	+$0
LU	soft white A	+$0
WL	sandstone A	+$0
WN	warm grey neutral A	+$0

Bookcase Hutch, Storage Attached *continued*

For veneer (W)

2U	light brown walnut A	+$0
40	dark brown walnut A	+$0
ED	aged cherry A	+$0
EK	medium red walnut A	+$0
EW	medium matte walnut A	+$0
ET	clear on ash A	+$0
EU	oak on ash A	+$0
EV	walnut on ash A	+$0
UL	natural maple A	+$0
UX	walnut on cherry A	+$0

For glass (G)

8Q	folkstone grey A	+$0
91	white A	+$0
98	studio white A	+$0

Step 13. Top/Edge Finish

For 3/8" laminate thin top (3)

76	light brown walnut A	+$0
8Q	folkstone grey A	+$0
91	white A	+$0
98	studio white A	+$0
CL	cool grey neutral A	+$0
HM	natural maple A	+$0
HP	light anigre A	+$0
HX	aged cherry A	+$0
HY	walnut on cherry A	+$0
LA	light ash A	+$0
LBA	clear on ash A	+$0
LBR	phantom ecru A	+$0
LBS	phantom cocoa A	+$0
LBU	medium matte walnut A	+$0
LBV	warm grey teak A	+$0
LBB	oak on ash A	+$0
LBC	walnut on ash A	+$0
LBD	dark brown walnut A	+$0
LBE	medium red walnut A	+$0
LBF	neutral twill A	+$0
LBG	sarum twill A	+$0
LBH	earthen twill A	+$0
LBJ	graphite twill A	+$0
LBK	pewter mesh A	+$0
LBL	steel mesh A	+$0
LBM	crisp linen A	+$0
LBN	classic linen A	+$0
LBP	casual linen A	+$0
LBQ	white twill A	+$0
LU	soft white A	+$0
WL	sandstone A	+$0
WN	warm grey neutral A	+$0

For 3/8" veneer thin top (4)

2U	light brown walnut A	+$85
40	dark brown walnut A	+$85
ED	aged cherry A	+$85
EK	medium red walnut A	+$85
EW	medium matte walnut A	+$85
ET	clear on ash A	+$85
EU	oak on ash A	+$85
EV	walnut on ash A	+$85
UL	natural maple A	+$85
UX	walnut on cherry A	+$85

Step 14. Lock Option		
For lock (L)		
KA	keyed alike A	-$10
KC	keyed differently, chrome A	+$0
KD	keyed differently, black A	+$0

Hutch, Full Enclosure FV451.

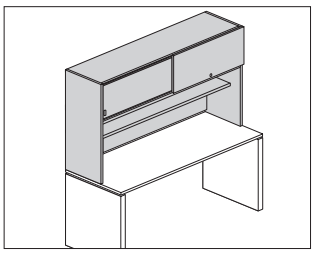

Product Information

Description

This hutch attaches onto a surface to provide fully enclosed overhead storage. It is available in 2 heights; the 29″-high has a storage area with sliding doors, the 40″-high has a storage area with sliding doors and a shelf below. It has 2 types of sliding doors; a solid primary door with an optional lock encloses 1 side, and a painted or translucent secondary door encloses the other side. Both doors can slide the entire width of the hutch. The primary door can be locked on either side. Secondary door handle finish is anodized aluminum. The underside of hutch accepts a task light.

Notes

For additional product options, see Vary Easy® Program in Appendices.

Installation requires field drilling through top of surface.

Grain direction is vertical on veneer and wood-grain laminate hutch door.

59″- and 60″-wide hutches have 1 primary and 1 secondary door. 65″- and 66″-wide hutches have 2 primary doors and 1 secondary door. 71″- and 72″-wide hutches have 2 primary and 2 secondary doors. Primary doors lock at the ends of the hutch only.

59″- and 60″-wide hutches have a center divider. 65″- and 66″-wide have 2 dividers and are divided as 1/3, 1/3, 1/3. 71″-, and 72″-wide hutches have 2 dividers and are divided as 1/4, 1/2, 1/4.

When attaching hutch to a rectangular surface or return, specify hutch width to match surface width. When attaching hutch to an extended corner surface or a corner application with a rectangular surface and return, specify hutch width 1″ less than overall width.

Order optional task lights and accessories separately:

- Cord manager (FV984.)
- Performance task light (G6114.xxxxT)
- Utility task light (G6136.xxT)

For keyed-alike locks, see Keyed-Alike Information in Appendices.

Dimensions

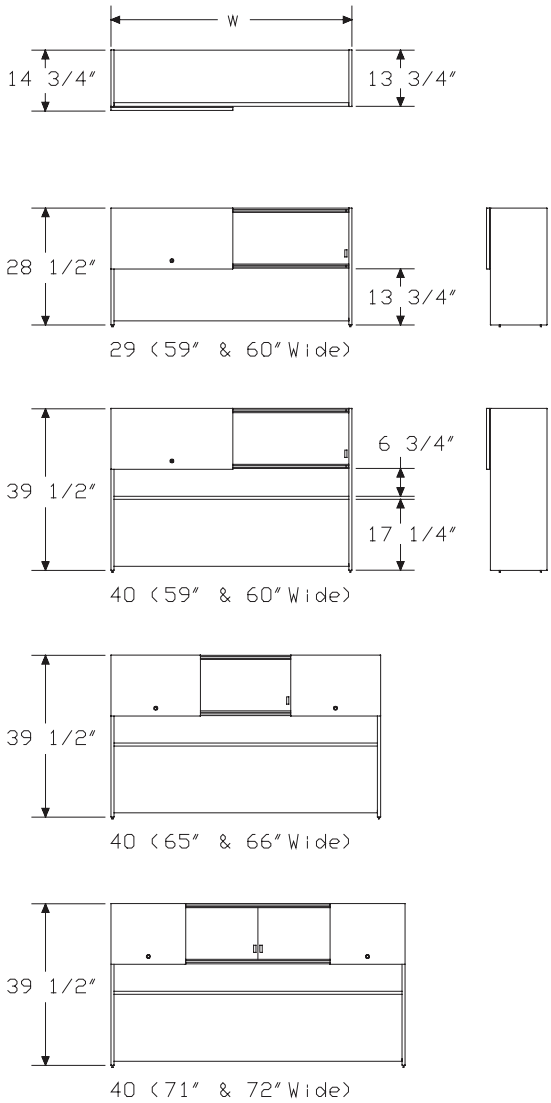

Specification Information

Step 1.

FV451.

Step 2. Height

29	28½" high
40	39½" high

Step 3. Width

59	59" wide
60	60" wide
65	65" wide
66	66" wide
71	71" wide
72	72" wide

Step 4. Case/Primary Door Material

L	laminate
C	laminate case/veneer door [A]
W	veneer [A]

Step 5. Secondary Door Material

A	translucent plastic
P	painted

Step 6. Lock

N	no lock
L	lock

Prices for Steps 1-6.

			LAN	LAL	LPN	LPL	CAN	CAL
FV451.	**29**	**59**	$1929	1941	1845	1857	2245	2257
		60	$1929	1941	1845	1857	2245	2257
		65	$2065	2075	1973	1985	2393	2403
		66	$2065	2075	1973	1985	2393	2403
		71	$2197	2219	2103	2126	2539	2562
		72	$2197	2219	2103	2126	2539	2562
	40	**59**	$2160	2172	2067	2077	2514	2525
		60	$2160	2172	2067	2077	2514	2525
		65	$2311	2321	2210	2220	2678	2690
		66	$2311	2321	2210	2220	2678	2690
		71	$2462	2484	2355	2377	2843	2866
		72	$2462	2484	2355	2377	2843	2866

			CPN	CPL	WAN	WAL	WPN	WPL
FV451.	**29**	**59**	$2149	2159	3815	3826	3649	3661
		60	$2149	2159	3815	3826	3649	3661
		65	$2289	2299	4065	4076	3889	3899
		66	$2289	2299	4065	4076	3889	3899
		71	$2429	2451	4315	4336	4127	4149
		72	$2429	2451	4315	4336	4127	4149
	40	**59**	$2404	2415	4273	4284	4087	4099
		60	$2404	2415	4273	4284	4087	4099
		65	$2563	2574	4553	4564	4354	4366
		66	$2563	2574	4553	4564	4354	4366
		71	$2719	2742	4831	4854	4622	4643
		72	$2719	2742	4831	4854	4622	4643

Step 7. Lock Option

For lock (L)

KA	keyed alike	-$10
KC	keyed differently, chrome	+$0

Step 8. Case/Stanchion Finish

Solid-Color Laminate

For 59" wide (59), 60" wide (60), 65" wide (65), 66" wide (66), 71" wide (71), or 72" wide (72) with laminate (L), or laminate case/veneer door (C)

8Q	folkstone grey	+$0
91	white	+$0
98	studio white	+$0
CL	cool grey neutral	+$0
LU	soft white	+$0
WL	sandstone	+$0
WN	warm grey neutral	+$0

Linen Laminate

For 59" wide (59) or 60" wide (60) with laminate (L), or laminate case/veneer door (C)

LBM	crisp linen	+$0
LBN	classic linen	+$0
LBP	casual linen	+$0

Mesh Laminate

For 59" wide (59) or 60" wide (60) with laminate (L), or laminate case/veneer door (C)

LBK	pewter mesh	+$0
LBL	steel mesh	+$0

Twill Laminate

For 59" wide (59) or 60" wide (60) with laminate (L), or laminate case/ veneer door (C)

LBF	neutral twill	+$0
LBG	sarum twill	+$0
LBH	earthen twill	+$0
LBJ	graphite twill	+$0
LBQ	white twill	+$0

Wood-Grain Laminate

For 59" wide (59) or 60" wide (60) with laminate (L), or laminate case/ veneer door (C)

HM	natural maple	+$0
HP	light anigre	+$0
LBA	clear on ash	+$0
LBR	phantom ecru	+$0
LBS	phantom cocoa	+$0
LBU	medium matte walnut	+$0
LBV	warm grey teak	+$0
LBB	oak on ash	+$0
LBC	walnut on ash	+$0
LBD	dark brown walnut	+$0
LBE	medium red walnut	+$0
76	light brown walnut	+$0
HX	aged cherry	+$0
HY	walnut on cherry	+$0

Wood Veneer

For veneer (W)

2U	light brown walnut A	+$0
40	dark brown walnut A	+$0
ED	aged cherry A	+$0
EK	medium red walnut A	+$0
EW	medium matte walnut A	+$0
ET	clear on ash A	+$0
EU	oak on ash A	+$0
EV	walnut on ash A	+$0
UL	natural maple A	+$0
UX	walnut on cherry A	+$0

Step 9. Primary Door Finish

Solid-Color Laminate

For laminate (L)

8Q	folkstone grey	+$0
91	white	+$0
98	studio white	+$0
CL	cool grey neutral	+$0
LU	soft white	+$0
WL	sandstone	+$0
WN	warm grey neutral	+$0

Linen Laminate

For laminate (L)

LBM	crisp linen	+$0
LBN	classic linen	+$0
LBP	casual linen	+$0

Mesh Laminate

For laminate (L)

LBK	pewter mesh	+$0
LBL	steel mesh	+$0

Twill Laminate

For laminate (L)

LBF	neutral twill	+$0
LBG	sarum twill	+$0
LBH	earthen twill	+$0
LBJ	graphite twill	+$0
LBQ	white twill	+$0

Wood-Grain Laminate

For laminate (L)

HM	natural maple	+$0
HP	light anigre	+$0
LBA	clear on ash	+$0
LBR	phantom ecru	+$0
LBS	phantom cocoa	+$0
LBU	medium matte walnut	+$0
LBV	warm grey teak	+$0
LBB	oak on ash	+$0
LBC	walnut on ash	+$0
LBD	dark brown walnut	+$0
LBE	medium red walnut	+$0
76	light brown walnut	+$0
HX	aged cherry	+$0
HY	walnut on cherry	+$0

Wood Veneer		
For laminate case/veneer door (C) or veneer (W)		
2U	light brown walnut A	+$0
40	dark brown walnut A	+$0
ED	aged cherry A	+$0
EK	medium red walnut A	+$0
EW	medium matte walnut A	+$0
ET	clear on ash A	+$0
EU	oak on ash A	+$0
EV	walnut on ash A	+$0
UL	natural maple A	+$0
UX	walnut on cherry A	+$0

Step 10. Secondary Door Finish

Translucent Plastic		
For translucent plastic (A)		
J9	opal frosted	+$0

Sand Texture Paint		
For painted (P)		
8Q	folkstone grey	+$0
91	white	+$0
98	studio white	+$0
CL	cool grey neutral	+$0
G1	graphite	+$0
WL	sandstone	+$0
WN	warm grey neutral	+$0

Metallic Paint		
For painted (P)		
CN	metallic champagne	+$0
EH	metallic bronze	+$0
MS	metallic silver	+$0

Hutch, Partial Enclosure FV450.

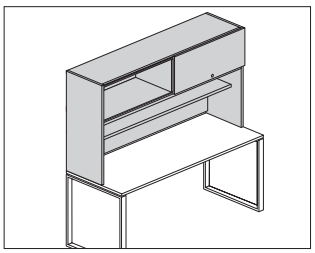

Product Information

Description

This hutch attaches onto a surface to provide partially enclosed overhead storage. It is available in 2 heights; the 29″-high has a storage area with a sliding door, the 40″-high has a storage area with sliding door and a shelf below. The sliding door with optional lock encloses 1 side of the storage area and can be locked on either side. The back panel is raised 1 3/8″ above the surface to provide routing of cords and cables. The underside of hutch accepts a task light.

Notes

For additional product options, see Vary Easy® Program in Appendices.

Installation requires field drilling through top of surface.

Grain direction is vertical on veneer and wood-grain laminate hutch door.

59″- and 60″-wide hutches have 1 door. 65″-, 66″-, 71″- and 72″-wide hutches have 2 doors.

59″- and 60″-wide hutches have a center divider. 65″- and 66″-wide have 2 dividers and are divided as 1/3, 1/3, 1/3. 71″-, and 72″-wide hutches have 2 dividers and are divided as 1/4, 1/2, 1/4.

When attaching hutch to a rectangular surface or return, specify hutch width to match surface width. When attaching hutch to an extended corner surface or a corner application with a rectangular surface and return, specify hutch width 1″ less than overall width.

Order optional task lights and accessories separately:

- Cord manager (FV984.)
- Performance task light (G6114.xxxxT)
- Utility task light (G6136.xxT)

For keyed-alike locks, see Keyed-Alike Information in Appendices.

Dimensions

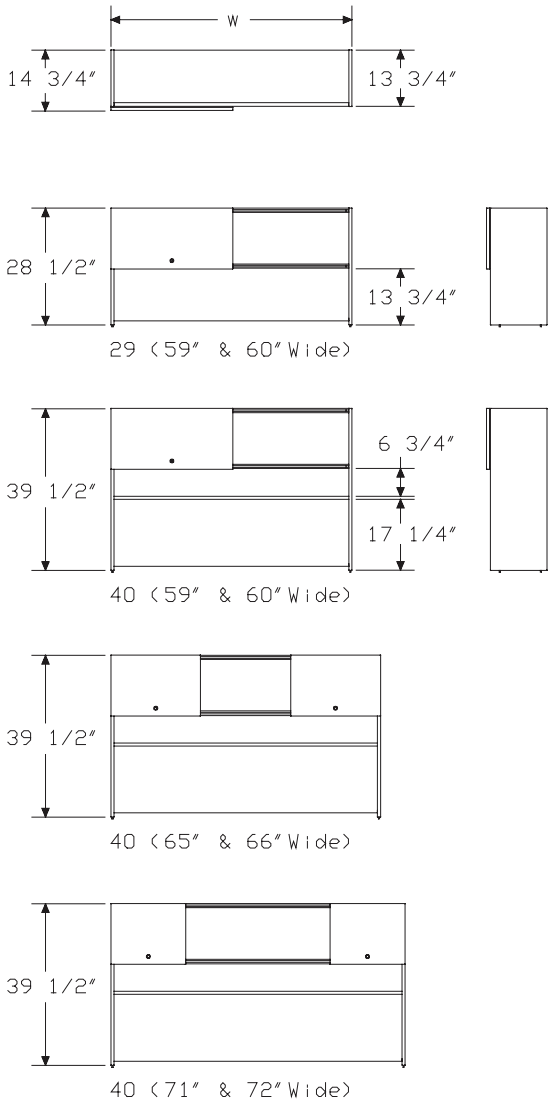

Specification Information

Step 1.

FV450.

Step 2. Height

29	28½" high
40	39½" high

Step 3. Width

59	59" wide
60	60" wide
65	65" wide
66	66" wide
71	71" wide
72	72" wide

Step 4. Case/Door Material

L	laminate
C	laminate case/veneer door A
W	veneer A

Step 5. Lock

N	no lock
L	lock

Prices for Steps 1-5.

			LN	LL	CN	CL	WN	WL
FV450.	**29**	**59**	$1677	1689	1953	1964	3319	3329
		60	$1677	1689	1953	1964	3319	3329
		65	$1795	1806	2080	2093	3534	3546
		66	$1795	1806	2080	2093	3534	3546
		71	$1912	1934	2208	2231	3752	3774
		72	$1912	1934	2208	2231	3752	3774
	40	**59**	$1879	1889	2187	2197	3715	3727
		60	$1879	1889	2187	2197	3715	3727
		65	$2009	2020	2330	2341	3959	3970
		66	$2009	2020	2330	2341	3959	3970
		71	$2141	2164	2474	2494	4201	4224
		72	$2141	2164	2474	2494	4201	4224

Step 6. Lock Option

For lock (L)

KA	keyed alike	-$10
KC	keyed differently, chrome	+$0

Step 7. Case/Stanchion Finish

Solid-Color Laminate

For 59" wide (59), 60" wide (60), 65" wide (65), 66" wide (66), 71" wide (71), or 72" wide (72) with laminate (L), or laminate case/veneer door (C)

8Q	folkstone grey	+$0
91	white	+$0
98	studio white	+$0
CL	cool grey neutral	+$0
LU	soft white	+$0
WL	sandstone	+$0
WN	warm grey neutral	+$0

Linen Laminate

For 59" wide (59) or 60" wide (60) with laminate (L), or laminate case/veneer door (C)

LBM	crisp linen	+$0
LBN	classic linen	+$0
LBP	casual linen	+$0

Mesh Laminate

For 59" wide (59) or 60" wide (60) with laminate (L), or laminate case/veneer door (C)

LBK	pewter mesh	+$0
LBL	steel mesh	+$0

Twill Laminate

For 59" wide (59) or 60" wide (60) with laminate (L), or laminate case/veneer door (C)

LBF	neutral twill	+$0
LBG	sarum twill	+$0
LBH	earthen twill	+$0
LBJ	graphite twill	+$0
LBQ	white twill	+$0

Wood-Grain Laminate

For 59" wide (59) or 60" wide (60) with laminate (L), or laminate case/ veneer door (C)

HM	natural maple	+$0
HP	light anigre	+$0
LBA	clear on ash	+$0
LBR	phantom ecru	+$0
LBS	phantom cocoa	+$0
LBU	medium matte walnut	+$0
LBV	warm grey teak	+$0
LBB	oak on ash	+$0
LBC	walnut on ash	+$0
LBD	dark brown walnut	+$0
LBE	medium red walnut	+$0
76	light brown walnut	+$0
HX	aged cherry	+$0
HY	walnut on cherry	+$0

Wood Veneer

For veneer (W)

2U	light brown walnut A	+$0
40	dark brown walnut	+$0
ED	aged cherry A	+$0
EK	medium red walnut	+$0
EW	medium matte walnut	+$0
ET	clear on ash A	+$0
EU	oak on ash A	+$0
EV	walnut on ash A	+$0
UL	natural maple A	+$0
UX	walnut on cherry	+$0

Step 8. Door Finish

Solid-Color Laminate

For laminate (L)

8Q	folkstone grey	+$0
91	white	+$0
98	studio white	+$0
CL	cool grey neutral	+$0
LU	soft white	+$0
WL	sandstone	+$0
WN	warm grey neutral	+$0

Linen Laminate

For laminate (L)

LBM	crisp linen	+$0
LBN	classic linen	+$0
LBP	casual linen	+$0

Mesh Laminate

For laminate (L)

LBK	pewter mesh	+$0
LBL	steel mesh	+$0

Twill Laminate

For laminate (L)

LBF	neutral twill	+$0
LBG	sarum twill	+$0
LBH	earthen twill	+$0
LBJ	graphite twill	+$0
LBQ	white twill	+$0

Wood-Grain Laminate

For laminate (L)

HM	natural maple	+$0
HP	light anigre	+$0
LBA	clear on ash	+$0
LBR	phantom ecru	+$0
LBS	phantom cocoa	+$0
LBU	medium matte walnut	+$0
LBV	warm grey teak	+$0
LBB	oak on ash	+$0
LBC	walnut on ash	+$0
LBD	dark brown walnut	+$0
LBE	medium red walnut	+$0
76	light brown walnut	+$0
HX	aged cherry	+$0
HY	walnut on cherry	+$0

Wood Veneer		
For laminate case/veneer door (C) or veneer (W)		
2U	light brown walnut A	+$0
40	dark brown walnut	+$0
ED	aged cherry A	+$0
EK	medium red walnut	+$0
EW	medium matte walnut	+$0
ET	clear on ash A	+$0
EU	oak on ash A	+$0
EV	walnut on ash A	+$0
UL	natural maple A	+$0
UX	walnut on cherry	+$0

Open Shelf Organizer FF900.

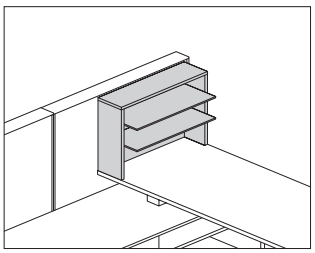

Product Information

Description

This organizer sits on a surface or credenza to provide open storage and organization of small items. It has a laminate or veneer case with aluminum shelves.

Notes

For additional product options, see Vary Easy Program® in Appendices.

24", 30", and 36" widths match the depth of peninsula surfaces; 23" and 29" widths match the depth of standard surfaces.

Order open shelf organizer divider (FF901.) separately.

Dimensions

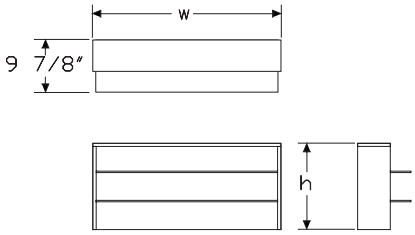

Specification Information

Step 1.

FF900. A

Step 2. Height

13 12½" high A
17 16½" high A
24 23½" high A

Step 3. Width

23 23" wide A
24 24" wide A
29 29" wide A
30 30" wide A
36 36" wide A

Step 4. Case Material

L laminate A
W veneer A

Prices for Steps 1-4.

			L	W
FF900.	**13**	**23**	$790	1184
		24	$790	1184
		29	$819	1251
		30	$819	1251
		36	$851	1319
	17	**23**	$880	1370
		24	$880	1370
		29	$910	1435
		30	$910	1435
		36	$940	1501
	24	**23**	$971	1551
		24	$971	1551
		29	$1000	1619
		30	$1000	1619
		36	$1029	1687

Step 5. Top/Case/Edge Finish

Solid-Color Laminate

For laminate (L)

8Q	folkstone grey A	+$0
91	white A	+$0
98	studio white	+$0
CL	cool grey neutral A	+$0
LU	soft white A	+$0
WL	sandstone A	+$0
WN	warm grey neutral A	+$0

Linen Laminate

For laminate (L)

LBM	crisp linen	+$0
LBN	classic linen	+$0
LBP	casual linen	+$0

Mesh Laminate

For laminate (L)

LBK	pewter mesh	+$0
LBL	steel mesh	+$0

Twill Laminate

For laminate (L)

LBF	neutral twill	+$0
LBG	sarum twill	+$0
LBH	earthen twill	+$0
LBJ	graphite twill	+$0
LBQ	white twill	+$0

Wood-Grain Laminate

For laminate (L)

HM	natural maple A	+$0
HP	light anigre A	+$0
LBA	clear on ash	+$0
LBR	phantom ecru	+$0
LBS	phantom cocoa	+$0
LBU	medium matte walnut	+$0
LBV	warm grey teak	+$0
LBB	oak on ash	+$0
LBC	walnut on ash	+$0
LBD	dark brown walnut	+$0
LBE	medium red walnut	+$0
76	light brown walnut A	+$0
HX	aged cherry A	+$0
HY	walnut on cherry A	+$0

Wood Veneer

For veneer (W)

2U	light brown walnut A	+$0
40	dark brown walnut A	+$0
ED	aged cherry A	+$0
EK	medium red walnut A	+$0
EW	medium matte walnut A	+$0
ET	clear on ash A	+$0
EU	oak on ash A	+$0
EV	walnut on ash A	+$0
UL	natural maple A	+$0
UX	walnut on cherry A	+$0

Step 6. Shelf Finish

Anodized Aluminum

AN	clear anodized aluminum A	+$0

Open Shelf Organizer, Divider FF901.

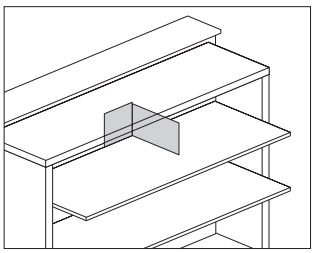

Product Information

Description

This divider fits on an open shelf organizer to divide shelf space.
Package contains 2.

Notes

Order open shelf organizer (FF900.) separately.

Dimensions

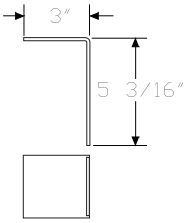

Specification Information

Step 1.

FF901. A		$123

Step 2. Surface Finish

AN	clear anodized aluminum A	+$0

Open Shelf Organizer Attachment Bracket FF902.

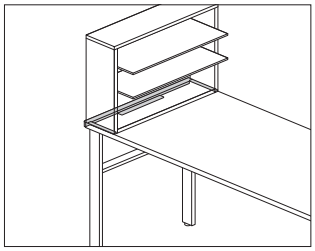

Product Information

Description

This bracket attaches to the bottom of the open shelf organizer (FF900.) and secures it to the end of a work surface. It is used in applications where the open shelf organizer is not placed up against a frame or architectural wall.

Notes

Specify bracket width to match open shelf organizer width.

Dimensions

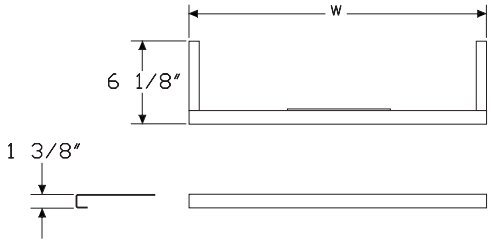

Specification Information

Step 1.

FF902. A

Step 2. Width

23	23" wide A	
24	24" wide A	
29	29" wide A	
30	30" wide A	
36	36" wide A	

Prices for Steps 1-2.

FF902.	**23**	$195
	24	$195
	29	$206
	30	$206
	36	$218

Step 3. Finish

Sand Texture Paint

BK	black A	+$0

Smooth Paint

8Q	folkstone grey A	+$0
91	white A	+$0
98	studio white A	+$0
CL	cool grey neutral A	+$0
LU	soft white A	+$0
WL	sandstone A	+$0
WN	warm grey neutral A	+$0

Tackboard FV980.

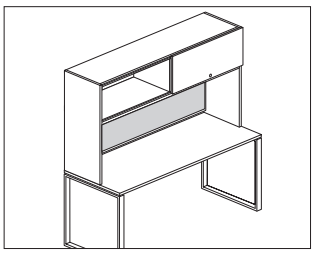

Product Information

Description

This tackboard attaches below a hutch or to an architectural wall.

Notes

For additional product options, see Vary Easy® Program in Appendices.

For hutch-mount option (HM), match tackboard width to hutch width.

Vary Easy Program offers the tackboard in 15"- to 30"-high in 1" increments and 24"-72"-wide in 1" increments

Tackboard accepts Customer's Own Material (COM). Yardage is estimated for directional, 54"-wide fabrics.

For hutch mounted (HM) with tackable fabric, horizontal (R)

Width—Yardage

59", 60"—1.86

65", 66"—2.02

71", 72"—2.19

For wall mounted (WM) with tackable fabric (T)

Height—Yardage

12"—.58

16"—.69

23"—.88

24"—.91

30"—1.05

For wall mounted (WM) with tackable fabric, horizontal (R)

Width—Yardage

24"—.91

30"—1.08

36"—1.25

42"—1.41

48"—1.58

54"—1.75

60"—1.91

66"—2.08

72"—2.25

For information on multiple quantities or nondirectional fabrics, contact COM Department. See Order Information in Appendices.

Dimensions

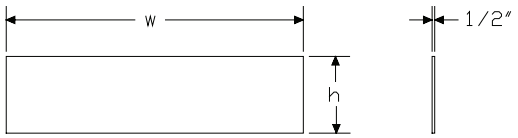

Specification Information

Step 1.

FV980.

Step 2. Mount Option

HM hutch mounted
WM wall mount

Step 3. Height

For hutch mounted (HM)

12 12" high
15 15" high

For wall mount (WM)

12 12" high
16 16" high
23 23" high
24 24" high
29 28½" high

Step 4. Width

For hutch mounted (HM)

59 59" wide
60 60" wide
65 65" wide
66 66" wide
71 71" wide
72 72" wide

For wall mount (WM)

24 24" wide
30 30" wide
36 36" wide
42 42" wide
48 48" wide
54 54" wide
60 60" wide
66 66" wide
72 72" wide

Step 5. Surface Material

For 24" wide (24), 30" wide (30), 36" wide (36), 42" wide (42), or 48" wide (48)

T tackable fabric
R tackable fabric, horizontal

For 54" wide (54), 59" wide (59), 60" wide (60), 65" wide (65), 66" wide (66), 71" wide (71), or 72" wide (72)

R tackable fabric, horizontal

Prices for Steps 1-5.

		24T	24R	30T	30R	36T	36R
FV980. WM	**12**	$134	134	167	167	196	196
	16	$159	159	191	191	224	224
	23	$284	284	318	318	348	348
	24	$284	284	318	318	348	348
	29	$321	321	355	355	387	387

		42T	42R	48T	48R	54R	59R
FV980. HM	**12**	—	—	—	—	—	$331
	15	—	—	—	—	—	$342
WM	**12**	$232	232	268	268	318	—
	16	$258	258	292	292	342	—
	23	$384	384	420	420	505	—
	24	$384	384	420	420	505	—
	29	$422	422	455	455	543	—

		60R	65R	66R	71R	72R
FV980. HM	**12**	$331	342	342	355	355
	15	$342	355	355	368	368
WM	**12**	$331	—	342	—	355
	16	$355	—	368	—	380
	23	$518	—	532	—	543
	24	$518	—	532	—	543
	29	$556	—	569	—	580

Step 6. Fabric

See application chart and textiles list for fabric usage and numbers. First 2 digits of number indicate fabric line; remaining digit(s) indicate fabric color.

	12	15	16	23	24
Price Category 1	+$0	0	0	0	0
Price Category 2	+$19	21	21	25	25
Price Category 3	+$33	37	37	42	42
Price Category 4	+$51	55	55	66	66
Price Category B	+$35	41	41	52	54
Price Category C	+$47	56	56	72	74
Price Category D	+$60	71	71	91	94
Price Category E	+$72	86	86	110	114

	29
Price Category 1	+$0
Price Category 2	+$31
Price Category 3	+$49
Price Category 4	+$73
Price Category B	+$63
Price Category C	+$86
Price Category D	+$108
Price Category E	+$131

Grommet Kit, Storage FV983.

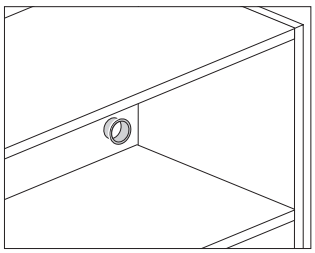

Product Information

Description

This grommet kit allows cords and cables to be routed through a storage cabinet. Includes a template for proper placement. Package of 6.

Notes

Grommet kit requires field-drilling of cabinet.

Dimensions

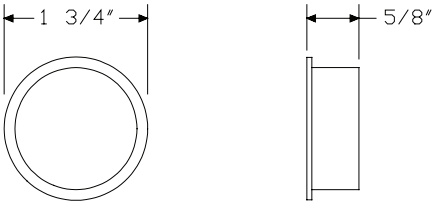

Specification Information

Step 1.

FV983.	$90

Step 2. Grommet Finish

A	light finish	+$0
B	medium finish	+$0
C	dark finish	+$0

Cord Manager FV984.

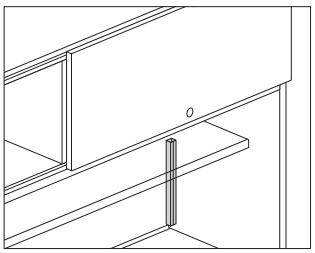

Product Information

Description

This cord manager routes a cord from the underside of a hutch to the surface when a task light is attached. Color is black. Package of 6.

Dimensions

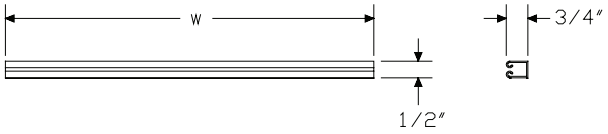

Specification Information

Step 1.

FV984.

Step 2. Height

12	12″ high
24	24″ high
30	29½″ high

Prices for Steps 1-2.

FV984.	**12**	$78
	24	$119
	30	$144

Index by Product Name

Canvas Office Landscape® Metal Storage

Canvas Vertical Tower Attachment Bracket page(s) 107
Connect™-Block Connector, 4-Circuit 88
Connect™-Junction Block to Junction Block Jumper, 4-Circuit 86
Connect™-Power Entry, 4-Circuit 85
Connect™ - S310 Electrical Unit with Connect Modular Connection 84
Credenza Cushion Top 91
Credenza Top for Metal Credenza 89
Drawer Divider for Box Drawer 22
Drawer Organizer Kit 23
File Compressor 25
File Drawer Organizer 98, 26, 12
Front-to-Back Filing Rail 95, 9
Meridian® Vertical Tower Attachment Bracket 109
Metal Credenza Shelf 92
Metal Freestanding Lateral File 5
Metal Freestanding Pedestal 13
Metal High Credenza, Open 56
Metal High Credenza, with Doors 58
Metal Low Credenza, Doors with Drawers 48
Metal Low Credenza, Open 27
Metal Low Credenza, Open with Drawers 40
Metal Low Credenza, with Doors 30
Metal Low Credenza, with Drawers 35
Metal Mobile Pedestal 17
Metal Vertical Tower, Thin Top 99
Metal Vertical Tower, Thin Top Side Facing Bookcase 104
Movable Divider 97, 11
Pari Screen, Storage Attached 93
Pedestal Cushion Top 20
Pencil Tray for Box Drawer 21
Powered Metal Low Credenza, Doors with Drawers 73
Powered Metal Low Credenza, Open with Drawers 62
Powered Metal Low Credenza, with Drawers 69
Powered Storage Cable Cover 81
Powered Storage Distributor Cover 83
Powered Storage Ganging Bracket Kit 80
Side-to-Side Filing Rail 96, 10
Stationary Tray for Box Drawer 24
Support Bracket, Low Credenza-to-Frame 79
Tu® Storage Tower Attachment Bracket 108

Canvas Office Landscape® Wood Storage

Bookcase Hutch, Storage Attached page(s) 199
Canvas Cabinet/Wall Attachment Bracket 198
Connect™-Block Connector, 4-Circuit 188
Connect™-Junction Block to Junction Block Jumper, 4-Circuit 186
Connect™-Power Entry, 4-Circuit 185
Connect™ - S310 Electrical Unit with Connect Modular Connection 184
Cord Manager 220
Credenza Cushion Top 191
Credenza Top for Wood Credenza 189
Credenza Top for Wood Credenza, with Pari Screen, Storage Attached 192
Grommet Kit, Storage 219
Hutch, Full Enclosure 204
Hutch, Partial Enclosure 208
Open Shelf Organizer 212
Open Shelf Organizer Attachment Bracket 215
Open Shelf Organizer, Divider 214
Pari Screen, Storage Attached 194
Pedestal Cushion Top 126
Powered Storage Cable Cover 181
Powered Storage Distributor Cover 183
Powered Storage Ganging Bracket Kit 180
Powered Wood Low Credenza, Doors with Drawers 175
Powered Wood Low Credenza, Open with Drawers 166
Powered Wood Low Credenza, with Drawers 171
Support Bracket, Low Credenza-to-Frame 179
Tackboard 216
Wood Credenza Shelf 196
Wood Freestanding Lateral File 113
Wood Freestanding Pedestal 117
Wood High Credenza, Open 159
Wood High Credenza, with Doors 162
Wood Low Credenza, Doors with Drawers 151
Wood Low Credenza, Open 127
Wood Low Credenza, Open with Drawers 142
Wood Low Credenza, with Doors 131
Wood Low Credenza, with Drawers 136
Wood Mobile Pedestal 122

Index by Product Number

FF10A. FF10K.	Wood Freestanding Pedestal	page(s) 117
FF11A. FF11K.	Wood Mobile Pedestal	122
FF20A. FF20K.	Wood Freestanding Lateral File	113
FF81A. FF81K.	Wood High Credenza, with Doors	162
FF800.	Wood High Credenza, Open	159
FF889.	Credenza Top for Wood Credenza, with Pari Screen, Storage Attached	192
FF890.	Credenza Top for Wood Credenza	189
FF891.	Credenza Cushion Top	191, 91
FF892.	Wood Credenza Shelf	196
FF893.	Pedestal Cushion Top	126
FF900.	Open Shelf Organizer	212
FF901.	Open Shelf Organizer, Divider	214
FF902.	Open Shelf Organizer Attachment Bracket	215
FFC71A FFC71K	Wood Low Credenza, with Doors	131
FFC72A FFC72K	Wood Low Credenza, with Drawers	136
FFC73A FFC73K	Wood Low Credenza, Open with Drawers	142
FFC74A FFC74K	Wood Low Credenza, Doors with Drawers	151
FFC700	Wood Low Credenza, Open	127
FFD72A FFD72K	Powered Wood Low Credenza, with Drawers	171
FFD73A FFD73K	Powered Wood Low Credenza, Open with Drawers	166
FFD74A FFD74K	Powered Wood Low Credenza, Doors with Drawers	175
FM10A. FM10K.	Metal Freestanding Pedestal	13
FM11A. FM11K.	Metal Mobile Pedestal	17
FM20A. FM20K.	Metal Freestanding Lateral File	5
FM71A. FM71K.	Metal Low Credenza, with Doors	30
FM72A. FM72K.	Metal Low Credenza, with Drawers	35
FM73A. FM73K.	Metal Low Credenza, Open with Drawers	40
FM74A. FM74K.	Metal Low Credenza, Doors with Drawers	48
FM80A. FM80K.	Metal High Credenza, with Doors	58
FM90A. FM90K.	Metal Vertical Tower, Thin Top	99
FM91A. FM91K.	Metal Vertical Tower, Thin Top Side Facing Bookcase	104
FM700.	Metal Low Credenza, Open	27
FM800.	Metal High Credenza, Open	56
FM890.	Credenza Top for Metal Credenza	89
FM892.	Metal Credenza Shelf	92
FM893.	Pedestal Cushion Top	20
FM920.	Front-to-Back Filing Rail	95, 9
FM921.	Side-to-Side Filing Rail	96, 10
FM922.	Movable Divider	97, 11
FM923.	File Drawer Organizer	98, 26, 12
FM924.	Pencil Tray for Box Drawer	21
FM925.	Drawer Divider for Box Drawer	22
FM926.	Drawer Organizer Kit	23
FM927.	Stationary Tray for Box Drawer	24
FM928.	File Compressor	25
FM929.	Movable Divider	97, 11
FM930.	Canvas Vertical Tower Attachment Bracket	107
FMP72A FMP72K	Powered Metal Low Credenza, with Drawers	69
FMP73A FMP73K	Powered Metal Low Credenza, Open with Drawers	62
FMP74A FMP74K	Powered Metal Low Credenza, Doors with Drawers	73
FPS910	Powered Storage Cable Cover	181, 81
FPS911	Powered Storage Distributor Cover	183, 83
FT292.	Support Bracket, Low Credenza-to-Frame	179, 79
FV360.	Pari Screen, Storage Attached	194, 93
FV450.	Hutch, Partial Enclosure	208
FV451.	Hutch, Full Enclosure	204
FV454.	Bookcase Hutch, Storage Attached	199
FV692.	Canvas Cabinet/Wall Attachment Bracket	198
FV980.	Tackboard	216
FV983.	Grommet Kit, Storage	219
FV984.	Cord Manager	220
LG692	Tu® Storage Tower Attachment Bracket	108
MTAB.	Meridian® Vertical Tower Attachment Bracket	109
PS900	Powered Storage Ganging Bracket Kit	180, 80
Y1329.	Connect™ - S310 Electrical Unit with Connect Modular Connection	184, 84
Y1351.	Connect™-Power Entry, 4-Circuit	185, 85
Y1353.	Connect™-Junction Block to Junction Block Jumper, 4-Circuit	186, 86

Y1354. Connect™-Block Connector, 4-Circuit 188, 88

20-Day or Less/Assigned Lead-Time Order Information

20-Day or Less and Assigned Lead-Time Programs

20-day or less and assigned lead-time products are designed for established Herman Miller dealers with pre-approved credit.

Products are distributed from multiple manufacturing facilities across the United States. All products and options not designated by an Assigned Lead-Time icon [A] will ship in 20 business days or less after being acknowledged by Herman Miller. Products and options designated by an [A] are on the assigned lead-time program and will ship in 20 days, less than 20 days, or more than 20 days from order acknowledgement.

Ordering Procedure

Please place orders through Order Manager. If this is not available to you, place orders through mail or fax. Verbal purchase orders will not be accepted.

Order Entry fax number for Passage®, 5000 Series, and Meridian®
Filing and Storage: (616) 846 9236.
Order Entry fax number for all other products:
(616) 654 3085.

For more information, contact your Customer Care representative at: (866) 854 3048 EXT 3400.

Shipments and Delivery

Per Herman Miller Terms and Conditions.

Changes and Cancellation

Per Herman Miller Terms and Conditions.

Keyed-Alike Locks

All components with locks may be specified keyed alike. Products with keyed-alike locks will be shipped with lock chassis installed. Installation of lock cylinders will be on-site according to instructions provided. Herman Miller, Inc., will not be responsible for lock cylinder installation.

When specifying product keyed-alike, include separate lines on your order for the lock cylinders.

For Action Office®, Ethospace®, Passage®, Quadrant®, Resolve®, and Supplemental products, list cylinder part number and key number (232092-XXX); select a key number (or numbers) between 226 and 427, excluding numbers 408 and 412.

The following products require a different lock cylinder part number. Specify UKY001-XXX for these products only; select a key number (or numbers) between 226 and 427, excluding numbers 408 and 412.

A3013.
A3053.
G5180.
G5181.
G5280.

The keys provided in 232092-XXX and UKY001-XXX kits work with either cylinder type, provided the key numbers match.

For Tu® Storage, Canvas Office Landscape®, 5000 Series, and Meridian® Storage, see the following charts.

Keyed-alike locks are field installed.

To order keyed-alike locks for Action Office® Series 1 and 2 door panels, please contact Customer Care.

A master key can be used to open any lock on an attached or freestanding component. In addition, a removal key or lock change tool is required to remove lock plugs. Customers interested in ordering master keys, removal keys, or lock change tools should contact Customer Care.

For Canvas overhead and lower storage units, specify as follows:

Specification Code	Part Number	Color	Lock Series
KA	1B2JK7-XXX[1]	chrome	UM series 226-427

For Meridian Storage, Tu Storage, and 5000 Series desk components with pedestals, specify as follows:

Specification Code	Key Number	Color	Lock Series
KA	232092-XXX[1]	black	UM series 226-427
KA	1B2JK7-XXX[1]	chrome	UM series 226-427

For 5000 Series flipper door unit with bezel or credenza storage cabinet with bezel, specify as follows:

Specification Code	Key Number	Color	Lock Series
KA	232092-XXX[1]	black	UM series 226-427

For Canvas Metal Desk overhead units, specify as follows:

Specification Code	Key Number	Color	Lock Series
KA	232092-XXX[1]	black	UM series 226-427
KC	1B2JK7-XXX[1]	chrome	UM series 226-427

Key Number:
XXX[1] = a key number between 226 and 427 (excluding 408 and 412)

Stain-to-Match Program

Program Overview

The Stain-to-Match program gives you the option of using veneer finishes that are not listed in the standard offering. The program allows Herman Miller to match a customer's existing recut or natural veneer, or create a new finish that is unique to an installation.

Specific information on approval, ordering, pricing, and warranty for the Stain-to-Match program is listed below. Questions and requests for assistance may be directed to Herman Miller Options at:

(800) 654 3910

Ordering Products with Stain-to-Match Veneers

1. Fill out the Options Stain-to-Match Request Form and send along with a color sample (2" x 3" minimum) to the Herman Miller Options Applications Team at the address provided on the form. The form can be found on Omni.
2. Within 7-10 working days, Herman Miller Options will send a sample of the color-matched stain on Herman Miller veneer to the requester for the customer's signed approval.
3. If the sample meets the customer's approval, sign the reverse side of the sample, scan and email the approval to:
   options@hermanmiller.com.
4. After the stain has been approved, a formal quotation with special number and pricing can be provided, or the product can be specified through the Vary Easy program, if available. Work with the Options team on final product needs and how to specify.
5. A purchase order can then be placed.

Stain-to-Match Warranty

Herman Miller warrants its products to be free from defects in craftsmanship from the date of delivery for the applicable warranty period. Herman Miller is responsible for the physical properties of the veneers available through the Stain-to-Match program, which include:

STA: Stain-to-Match on Recut Ash
STB: Stain-to-Match on Beech
STC: Stain-to-Match on Cherry
STD: Stain-to-Match on Oak
STK: Stain-to-Match on Reltech Anigre (Geiger)
STM: Stain-to-Match on Recut Mahogany
STP: Stain-to-Match on Maple
STU: Stain-to-Match on Walnut (Geiger)

See your specification tool for product specific finish offering limitations.

Vary Easy Program

Program Overview

Vary Easy is a program designed to help dealers specify standard products with a larger breadth of options. For example, depending on the type of product being specified, choices include additional size, finish, edge types, and cable management features. Vary Easy 3D, specIT, and third-party text-based specification packages support the Vary Easy program. Vary Easy 3D enables designers to create a 3D image, CAD symbols, and a price book page. A Vary Easy product number is assigned for each product as the user selects specific options. Once the product is completely specified, the order can be submitted via Kiosk's Order Manager or a dealer's business system.

Accessing and Specifying Vary Easy

To view the full product vocabulary, go to the Vary Easy Product Offering on Kiosk. To specify Vary Easy, go to the Vary Easy 3D website on Kiosk, specIT, or your third-party text-based specification package.

Once you've made your product line selection, continue to follow through each option and enter the specific options that represent the product you need. When the product is fully specified, Vary Easy will generate an orderable product number and instantly calculate a price.

Note: Failure to completely specify a product will cause a delay in order acknowledgements. Be sure to make a selection for all options offered.

The acknowledgement process for Vary Easy products is the same as for any standard order. Vary Easy products ship with a standardized lead time and are competitively priced.

For more information, contact your Customer Care Line at (866) 854 3048 EXT 3400.

Customer's Own Material/ Customer's Own Leather Order Information — Cushion Tops

Customer's Own Material/Customer's Own Leather

Program Overview

The Customer's Own Material (COM) and Customer's Own Leather (COL) program gives you the option of using textiles other than those listed. Herman Miller will test textiles for application to Herman Miller products and will process orders for those with approved COM/COL textiles only. COM/COL are assigned lead time textiles.

Omni lists an overview of fabrics and leathers that have been tested and indicates whether or not they were approved for application to Herman Miller products.

Specific information on the terms and conditions, testing, approval, and ordering process for COM/COL is listed below. Questions about the COM/COL program and requests for assistance may be directed to your COM representative at:
(616) 654 3400
(866) 854 3048 EXT 6543400

Customer's Own Material/Customer's Own Leather Warranty

Herman Miller does not warrant COM/COL textiles. COM/COL textiles are tested for application only; they are not tested for performance. The Herman Miller warranty does apply to the underlying products.

Suppliers of COM/COL textiles are responsible for color consistency within commercial tolerances, UV stability, and resistance to soiling and perspiration.

Customer's Own Material/Customer's Own Leather Pricing

COM is a Category 1 fabric. There are no application charges for COM fabrics. COL is a Category 7 textile; refer to prices on specific products to determine the application charge.

Ordering and payment for COM/COL textile yardage are the responsibility of the customer and the textile supplier.

If desired, Herman Miller will purchase COM textiles directly from True Textiles, C.F. Stinson, Luna Textiles, Maharam, and Momentum Textiles to simplify ordering and shipment. For this service, refer to the Supplier Connection program.

Application Note

Herman Miller does not guarantee that Customer's Own Material (COM) fabric patterns will align across panels/tiles or from one screen to the next. We also do not guarantee that COM fabric designs will be positioned consistently in the same location across several panels, tiles, or screens.

Textile Approval

1. Select a COM/COL textile.
2. If your textile is not listed on Omni, obtain a test number from a COM representative at (616) 654 3400. You can also submit your request within Omni. Please have the following information ready before calling: textile name, number, pattern, and the product you will apply it to.
3. Herman Miller will notify you of approval or disapproval within 4 days from receipt of the test yardage.

Ordering Products with COM/COL

1. Refer to the specific products to determine the yardage required for COM/COL textiles.
2. If your textile is not listed on Omni, call a COM representative at (616) 654 3400 or (866) 854 3048 EXT 6543400. The representative will assign an identification number for your textile (ID#) and will verify yardage requirements for your order. Yardage requirements are based on directional, 54"-wide textiles. Additional yardage may be needed due to the unique characteristics of a textile.
3. Enter your order on Order Manager in Omni.
4. Upon receipt of your purchase order, Herman Miller will send you a PO acknowledgment.
5. Arrangements must be made for the textiles to be shipped from the supplier to Herman Miller for application to the seating products. See Omni for shipping procedures and current shipping addresses or contact a COM representative at (616) 654 3400 or (866) 854 3048 EXT 6543400.

   Products will be scheduled for production when COM/COL textiles are received at Herman Miller. Standard lead times in effect at that time will apply.

   Note: If textiles are to be purchased directly by Herman Miller through the Supplier Connection program, Herman Miller will handle the ordering and shipping process and will schedule your order for production upon receipt of your purchase order (dependent on textile availability). Refer to the Supplier Connection program for more information.

Supplier Connection

Program Overview

The Supplier Connection program is a service offered by Herman Miller to purchase approved COM textiles directly from True Textiles, C.F. Stinson, Luna Textiles, Maharam, and Momentum Textiles. When you select a textile through this program, Herman Miller will facilitate the ordering, scheduling, and shipment of the textile directly with the supplier.

Suppliers included in the Supplier Connection program keep an active inventory of textiles that are pre-approved for application to Herman Miller products. Pre-approval applies only to the suitability of a textile for manufacturing and application to a Herman Miller product. Omni provides an overview of fabrics that have been tested and indicates whether or not they were approved for application to Herman Miller products.

Specific information on the terms and conditions, testing, approval, and ordering process for the Supplier Connection program is listed below. Questions and requests for assistance may be directed to your COM representative at:
(616) 654 3400
(866) 854 3048 EXT 6543400

Supplier Connection Warranty

Textiles purchased by Herman Miller through the Supplier Connection program are COM and are not warranted by Herman Miller. COM textiles are tested for application only; they are not tested for performance. The Herman Miller warranty does apply to the underlying products.

Suppliers of COM textiles are responsible for color consistency within commercial tolerances, UV stability, and resistance to soiling and perspiration.

Supplier Connection Pricing

Textiles purchased by Herman Miller through the Supplier Connection program are COM. COM is a Category 1 fabric. There are no application charges for COM fabrics.

Payment for textiles purchased by Herman Miller through the Supplier Connection program is the responsibility of the customer or dealer. Herman Miller will invoice the order at the supplier's prices published at the time of the order.

Textile Approval

1. Refer to Omni to identify the approval status of the textile. If your textile is not listed, contact the COM Department to request testing for application to Herman Miller products.
2. Herman Miller will notify you of approval or disapproval in approximately 4 days from receipt of the test yardage. If the textile is approved, it will be assigned a COM identification number.

Ordering Products with Supplier Connection COM

1. Identify and include the following information on your purchase order:
   - Product number and option
   - Herman Miller's COM identification number
2. Enter your order on Order Manager in Omni.
3. Upon receipt of the purchase order, Herman Miller will process your order and send you a PO acknowledgment. Herman Miller will determine the yardage required to produce your product and will order and schedule for delivery the required textile. Standard lead times in effect at the time the textile is allocated at the supplier will apply to products ordered through this program.

Proprietary Textiles Application Chart — Seating

• *Available*

[A] *Assigned lead-time textile.*
See following page for exception notes.
[N] *Non-woven textile.*

	Aeron® Chairs	Cosm™ Chairs	Mirra® 2 Chairs/Stools	Celle® Chairs/Stools	Embody® Chairs	Sayl® Work Chairs/Stools	Sayl Side Chairs	Setu® Chairs/Stools	Setu Lounge Chair/Ottoman	Verus™ Work Chairs/Stools Back	Verus Work Chairs/Stools Seat	Verus Side Chairs Back	Verus Side Chairs Seat	Verus Plus Chairs	Aside® Chairs	Caper® Chairs/Stools	Keyn Chair Group Back	Keyn Chair Group Seat	Lino™ Chairs Back	Lino Chairs Seat	Locale® Bench Cushion	Public® Office Landscape Back	Public Office Landscape Seat	Plex™ Lounge Furniture	Swoop™ Lounge Seating - Fully Upholstered	Swoop Lounge Seating - Plywood	Cushion Tops	Workspaces
Price Category 1																												
COM Customer's Own Material [A]				14		1	1								1			1			1		1	1	1	1	1	1
231_ _ 8Z Pellicle®	•																											
1A7_ _ AireWeave 2			•																									
8T_ _ Crossing				•				•	•						•						•				•	•	•	•
3DE_ _ Dex				14		•	•			•	•	•	•	•	•			•			•		•	19	•		•	
4RM_ _ Duo																			•									
6V_ _ Flexnet™																•												
95_ _ Gem				14				•	•						•						•			•	•		•	•
845_ _ Intercept		•																										
65_ _ Interweave										•		•																
4W_ _ Lyris 2™								•	•																			
1MN_ _ Monologue				14		24	22	•	•		•	•	•				•	•		•	•		•	•	•	•		
3DK_ _ Stretch Knit						21																						
1WS_ _ Whisper				14		24	•	•	•		•	•	•	•	•		•	•		•	•		•	•	•	•		
Price Category 2																												
92_ _ Crepe				•		•	•	•	•	•	•	•	•	•	•		•	•		•	•			•	•	•	•	•
1LM_ _ Loom				14		•	•			•	•	•	•	•			•	•		•	•		•			•	•	•
1MV_ _ Marvel [N]						21	22											•									•	
1HA_ _ Medley				15	•	•	22			•	•	•	•	•	•		•	•		•	•	•	•	•	•		•	•
3A_ _ Moiré				14		•	•	•	•		•		•		•		•	•		•			•				•	•
30_ _ Rhythm				•	23	•	•			•	•	•	•	•	•		•	•		•	•		•		•	•	•	
1RV_ _ Rivet				14								•	•	•	•		•	•			•			•	•	•	•	
3SL_ _ Sequel [N] [A]				15		•	•	•	•	•	•	•	•	•	•		•	•		•	•		•	•	•	•	•	
8R_ _ Twist				•		•	•	•	•	•	•	•	•	•	•		•	•		•	•		•	•	•	•	•	•
Price Category 3																												
70_ _ Bento						•	•	•	•		•	•	•		8			•		•								•
8M_ _ Latitude™			23			•	•													•					•	•		
Price Category 4																												
7Y_ _ Bingo [N] [A]								•	•	•	•	•	•	•	8		•	•		•	•						•	
213_ _ Mercer				14		21	22			•	•	•	•	•			•	•		•			•		•	•	•	
1A9_ _ Network																						•						
6J_ _ Plateau															•												•	
6S_ _ Quilty				14		•	•			•	•	•	•		•		•	•		•	•				•		•	
8Y_ _ Spools				14		21	•		•	•	•	•	•	•	•		•	•		•	•				•		•	
22P_ _ Strata						•	•	•		•	•	•	•	•	•		•	•		•	•	•	•	•	•	•	•	
Price Category 5																												
No fabrics available at this time																												
Price Category 6																												
35_ _ Balance					•			•																				
Price Category 7																												
COL Customer's Own Leather [A]	1			14											8												1	
Price Category 8																												
No fabrics available at this time																												
Price Category 9																												
21_ _ Leather [N]	23			14											8					•						•	•	

Continued on next page

Proprietary Textiles Application Chart — Seating

continued

All foam and Proprietary Textiles on HermanMiller seating comply with California TB 117-2013.
Application Note: Herman Miller cannot guarantee material/pattern alignment in adjacent products. For example, a fabric's pattern may not align from one pedestal cushion top to the next, or from one chair to the next.

1 *Refer to price book appendices and Kiosk for COM/COL information.*
7 *Available on 1" Cushion Tops only.*
8 *Only available on non-upholstered outer back (PB) option.*
14 *Available on Celle UC (upholstered seat) and Celle UF (upholstered seat) Chairs.*
15 *Available only on Celle HC (upholstered seat with protective edge) and Celle HF (upholstered seat) Chairs.*
19 *Available on Plex seat only.*
21 *Not available on Sayl upholstered back work chairs.*
22 *Not available on Sayl side chairs with upholstered backs.*
23 *Available in select colors. Refer to "Proprietary Textile Colors - Seating" for color offering.*
24 *Not available on Sayl upholstered High-Back Work Chairs.*

Price Category 1

Customer's Own Material

See Order Information in Appendices.
Assigned lead-time textile. A

8Z Pellicle®

For New Aeron® Chairs
56% elastomeric
44% polyester

23101	Mineral
23102	Carbon
23103	Graphite

AireWeave™ 2

For Mirra® 2 Chairs
67% elastomeric
33% antimony-free polyester

1A701	Alpine
1A702	Slate Grey
1A703	Graphite
1A704	Lime Green
1A705	Cappuccino
1A706	Urban Orange
1A707	Dark Turquoise
1A708	Twilight

Crossing

54" wide
86% antimony-free polyester
14% polyester

8T03	Wicker
8T04	Porcelain
8T05	Warm Grey
8T06	Sepia
8T07	Pumpkin
8T08	Copper
8T09	Cranberry
8T10	Tomato
8T11	Mulberry
8T12	Plum
8T13	Green Apple
8T14	Loden
8T15	Spruce
8T16	Periwinkle
8T17	Cerulean
8T18	Indigo
8T19	Shale
8T20	Brownstone
8T21	Bark
8T22	Tin
8T23	Graphite
8T24	Black

Dex

54" wide
50% recycled polyester
50% polyester

3DE01	Frost
3DE02	Silver Pine
3DE03	Stone
3DE04	Shale
3DE05	Charcoal

Duo

For Lino™ Chairs
52% polyester
48% elastomeric

4RM01	Mineral
4RM02	Poppy
4RM03	Green Leaf
4RM04	Jade
4RM05	Shadow
4RM06	Graphite

Flexnet™

For Caper® Chairs
69% elastomeric
31% polyester

6V01	Black
6V02	Silver Grey

Gem

54" wide
100% antimony-free polyester

9502	Tangerine
9503	Red
9507	Twilight
9508	Bayou
9510	Berry Blue
9511	Aqua Green
9512	Green Apple
9514	Black
9515	Slate Grey
9516	Fog

Interweave

For Verus™ Chairs
71% elastomeric
29% polyester

6504	Pewter
6505	Charcoal
6506	Black

Lyris 2™

For Setu® Chairs
74% elastomeric
26% polyester

4W21	Alpine
4W22	Mango
4W23	Chartreuse
4W25	Berry Blue
4W26	Slate Grey
4W28	Chino
4W29	Rattan
4W30	Java
4W31	Graphite

Monologue

54" wide
56% recycled polyester
44% polyester

1MN01	Linen
1MN02	Alabaster
1MN03	Truffle
1MN04	Folkstone
1MN05	Silver Pine
1MN06	Slate
1MN07	Seed
1MN08	Yellow Oxide
1MN09	Persimmon
1MN10	Tundra
1MN11	Meadow
1MN12	Blue Sky
1MN13	Blue Spruce
1MN14	Deep Sea

Price category 1 continued on next page

Price Category 1
continued

Price Category 2

Stretch Knit	
Assigned lead-time textile. A	
Available only on Sayl®	
Suspension Back Work Chairs	
97% polyester, 3% spandex	
3DK01	Fog
3DK02	Slate Grey
3DK03	Java
3DK04	Black
3DK05	Red
3DK06	Green Apple
3DK07	Berry Blue

Whisper	
54” wide	
73% recycled polyester	
27% polyester	
1WS01	Sand Dollar
1WS02	Pebble
1WS03	Silver Birch
1WS04	Iceberg
1WS05	Silver Pine
1WS06	Carbon
1WS07	Cumin
1WS08	Adobe
1WS09	Strawberry
1WS10	Blush
1WS11	Eggplant
1WS12	Willow
1WS13	Sea Grass
1WS14	Pool
1WS15	Blueberry

Crepe	
54” wide	
100% recycled polyester	
9201	Licorice
9203	Smoke
9207	Cherry
9209	Claret
9212	Raisin
9218	Aquamarine
9223	Cadet
9241	Beachglass
9243	Midnight
9244	Artichoke
9248	Warm White
9249	Stone
9250	Earth
9251	Fog
9252	Slate Grey
9253	Yellow Dark
9254	Coral
9255	Blush Grey
9256	Wild Berry
9257	Clover
9258	Caribbean
9259	Cerulean
9260	Brownstone
9261	Shale
9262	Graphite
9263	Tomato
9264	Green Apple

Loom	
54” wide	
100% polyester	
1LM01	Linen
1LM02	Brown Sugar and Spice
1LM03	Brick and Mortar
1LM04	Salt and Pepper
1LM05	Black
1LM06	Lemongrass
1LM07	Poppy
1LM08	Wild Berry
1LM09	Loden
1LM10	Jade
1LM11	Deep Sea

Medley	
54” wide	
100% polyester	
1HA01	Stone
1HA02	Trail
1HA03	Charcoal
1HA04	Cinder
1HA05	Citrus
1HA06	Papaya
1HA07	Chutney
1HA08	Tundra
1HA09	Feather Grey
1HA10	Chartreuse
1HA11	Loden
1HA12	Peacock
1HA13	Bayou
1HA14	Blue Grotto
1HA15	Blueberry
1HA22	Khaki
1HA23	Pewter
1HA24	Yellow Oxide
1HA25	Vintage Rose
1HA26	Raspberry
1HA27	Acai Berry

Moiré	
54” wide	
100% recycled polyester	
3A01	Concrete
3A02	Biscotti
3A03	Rattan
3A04	Chambray
3A05	Fern
3A08	Violet
3A09	Zin
3A10	Curry
3A11	Spice
3A12	Cork

Rhythm	
54” wide	
100% polyester	
3001	Kiwi Green *
3002	Green Apple
3003	Peacock
3004	Bayou *
3005	Berry Blue
3006	Iris
3007	Twilight
3008	Pumpkin *
3009	Poppy *
3010	Molasses
3011	Mulberry
3012	Khaki *
3013	Mink
3014	Black
3015	Charcoal

* Colors not available on Embody Chair

Rivet	
54” wide	
100% recycled polyester	
1RV01	Twig
1RV02	Deep Clay
1RV03	Woodrose
1RV04	Otter
1RV05	Hemlock
1RV06	Olive
1RV07	Lagoon
1RV08	Deep Sea
1RV09	Charcoal
1RV10	Grey Brindle

Price category 2 continued on next page

Proprietary Textile Colors — Seating

continued

Price Category 2

continued

Sequel

54” wide
100% vinyl
100% polyester knit backing
Resilience® finish

3SL01	White
3SL02	Pebble
3SL03	Mushroom
3SL04	Stone
3SL05	Chestnut
3SL06	Rattan
3SL07	Black Cherry
3SL08	Tundra
3SL09	Seal
3SL10	Blue Fog
3SL11	Folkstone
3SL12	Shale
3SL13	Slate Grey
3SL14	Charcoal
3SL15	Carbon Dark
3SL28	Navy

Twist

54” wide
80% antimony-free polyester
13% recycled polyester
7% polyester

8R05	Wicker
8R10	Poppy
8R14	Tin
8R15	Shale
8R16	Graphite
8R17	Birch
8R18	Sepia
8R22	Blueberry
8R23	Green Apple
8R26	Gunmetal
8R27	Cinder
8R28	Citrus
8R29	Pekoe
8R30	Tangerine
8R31	Red Plum
8R32	Wisteria
8R33	Forest
8R34	Jade Dark
8R35	Waterfall
8R36	Midnight Blue
8R37	Carbon Dark

Price Category 3

Bento

54” wide
100% antimony-free polyester

7001	Frost
7002	Linen
7003	Khaki
7004	Truffle
7005	Grey Black
7006	Pumpkin
7007	Cranberry
7008	Everglade
7009	Cobalt

Latitude™

61” wide
100% polyester

8M01	Graphite
8M02	Shadow
8M10	Alpine
8M17	Black
8M21	Slate Grey
8M22	Lime Green
8M23	French Press
8M24	Urban Orange
8M25	Dark Turquoise
8M26	Twilight

Price Category 4

Bingo

54” wide
100% PVC-free polyurethane
Resilience® finish

7Y01	Oyster
7Y02	Natural
7Y03	Cashew
7Y05	Rattan
7Y06	Root
7Y07	Woodland
7Y10	Allspice
7Y11	Canyon
7Y17	Seed
7Y18	Mushroom
7Y19	Blue Grey
7Y21	Black
7Y22	Mint
7Y23	Seaport
7Y24	Evening Blue
7Y26	Kiwi Green
7Y27	Celadon
7Y29	Pesto

Mercer

54” wide
50% solution dyed recycled nylon
50% solution dyed nylon
BLOCKaide

21301	Stone
21303	Cayenne
21305	Pesto
21306	Teal Blue
21307	Ultramarine
21310	Charcoal

Network

For Public Office Landscape®
sectional back/social chair.
knit to size
100% polyester

1A901	Warm White
1A902	Fog
1A903	Red
1A904	Wildberry
1A905	Green Apple
1A906	Twilight
1A907	Graphite

Plateau

knit to size
100% polyester

6J01	Feather Grey
6J02	Trail
6J06	Twig
6J08	Sagebrush
6J09	Winter Berry
6J10	Thunder
6J11	Blueberry
6J12	Rosemary
6J14	Black

Quilty

56” wide
100% antimony-free polyester
GreenShield

6S03	Khaki
6S04	Straw
6S07	Brick
6S10	Mink
6S11	Green Apple
6S13	Indigo
6S14	Zinc
6S15	Slate
6S16	Beachwood
6S17	Paprika
6S18	Plum
6S19	Juniper
6S20	Grey Black

Price category 4 continued on next page

Proprietary Textile Colors — Seating

continued

Price Category 4
continued

Spools	
54” wide	
51% recycled polyester	
49% polyester	
Crypton® Green	
8Y03	Trail
8Y05	Copper
8Y08	Bluegrass
8Y09	Lagoon
8Y12	Marsh
8Y13	Bud

Strata	
54” wide	
50% solution dyed recycled nylon	
50% solution dyed nylon	
BLOCKaide	
22P04	Pesto
22P05	Peacock
22P06	Blue Jay
22P07	Blueberry
22P09	Mango
22P10	Paprika
22P12	Wheat
22P13	Brownstone
22P14	Bayou

Price Category 5

No fabrics available at this time.

Price Category 6

Balance	
100% polyester	
3512	Carbon
3513	Black

Price Category 7

Customer’s Own Leather
See Order Information in Appendices. Assigned lead-time textile. A

Proprietary Textile Colors — Seating

continued

Price Category 8

No fabrics available at this time.

Price Category 9

Leather	
approx. 50 sq. ft. per hide	
100% leather	
2101	Ivory
2109	Black *
2110	Smoke
2111	Graphite
2112	Khaki
2113	Rattan
2114	Truffle
2115	Alpine
2116	Haze
2117	Sable Grey
2118	Dark Mineral **
2119	Dark Carbon ***
2120	Cranberry
2121	Deep Sea

* Armpad color available on Aeron® Chair, Graphite.
** Armpad color available on Aeron Chair, Mineral.
*** Armpad color available on Aeron Chair, Carbon.

Maharam Application Chart — Seating

• *Available*

A *Maharam textiles are on assigned lead times.*

[N] *Non-woven textile.*

	Mirra® Chairs/Stools	Celle® Chairs	Sayl® Work Chairs	Sayl Side Chairs	Setu® Chairs	Setu Lounge Chair/Ottoman	Verus™ Work Chairs/Stools Back	Verus Work Chairs/Stools Seat	Verus Side Chairs Back	Verus Side Chairs Seat	Aside® Chairs	Caper® Chairs	Keyn Chair Group Back	Keyn Chair Group Seat	Lino™ Chairs Seat	Locale® Bench Cushions	Public Office Landscape® Seat	Plex® Lounge Furniture	Swoop™ Lounge Seating - Fully Upholstered	Swoop Lounge Seating - Plywood	Cushion Tops	Workspaces
Price Category 1-2																						
No fabrics available at this time.																						
Price Category 3																						
No fabrics available at this time.																						
Price Category 4-9																						
No fabrics available at this time.																						
Price Category A																						
No fabrics available at this time.																						
Price Category B																						
TI_ _ Messenger - Maharam *		14	•	•	•	•	•	•	•	•	•		•	•	•				•	•	•	•
Price Category C																						
887_ _ Merit - Maharam		14	•	•							•			•	•		•	•	•	•	•	
Z27_ _ Manner - Maharam		14	•	•				•		•	•			•	•			•	•	•	•	•
Z3_ _ Metric - Maharam		14	•	•			•		•		•			•	•				•	•	•	•
8EY_ _ Murmur - Maharam		14	•	16				•		•	•			•	•		•	•	•			
Price Category D																						
No fabrics available at this time.																						
Price Category E																						
896_ _ Dwell - Maharam		14	16	16				•		•	•			•	•		•					
Z32_ _ Skein - Maharam		14	16	16	•						•			•						•	•	•
Price Category F																						
82T_ _ Apt [N] - Maharam			18	•			•	•	•	•				•			•	21	•			
74M_ _ Instill [N] - Maharam		15	18	16			•	•	•	•			•	•	•		•	•		•		
Z33_ _ Strum - Maharam [N]				16										•					•			
Price Category G																						
ZC2_ _ Compound - Maharam [N]			16	16				•		•	8			•	•			•		•		
TG_ _ Divina Melange - Maharam		14	•	•	•		•	•	•	•	8		•	•	•			•	•	•	•	
ZP3_ _ Pocket - Maharam														•	•						•	
V25_ _ Steelcut Trio - Maharam		14	16	•					•					•	•			•			•	
Price Category H																						
ZT_ _ Circles - Maharam		14	16	16										•							•	
ZK_ _ Dot Pattern - Maharam		14	•	•	•						•			•							•	
ZL_ _ Small Dot Pattern - Maharam		14	•	•	•	•		•		•	•			•							•	
Price Category I																						
7CW_ _ Cursive - Maharam		14	14	16			•	•	•	•	8			•	•	•	•		•		•	
Price Category J-V																						
No fabrics available at this time.																						

** Available in select colors on 20-day lead-time.*

Refer to "Maharam Colors - Seating" for 20-day colors.

8 *Only available on nonupholstered outer back option (PB).*

14 *Available on Celle UC (upholstered seat) chairs and Celle UF (upholstered seat) chairs.*

15 *Available only on Celle HC (upholstered seat with protective edge) chairs and Celle HF (upholstered seat) chairs.*

16 *Available on Sayl Chair seat.*

18 *Available on Sayl Chair seat and upholstered mid-back.*

21 *Available on Plex seat and on ottoman.*

Maharam Colors — Seating

Price Category 1-2	Price Category 3	Price Category 4-9	Price Category A
No fabrics available at this time.	No fabrics available at this time.	No fabrics available at this time.	No fabrics available at this time.

- Maharam textiles are on assigned lead times A unless otherwise noted.
- Fabric numbers are listed as Herman Miller fabric number/Maharam fabric number.

Price Category B

Messenger — Maharam	
54” wide	
78% recycled polyester	
15% polyester	
7% nylon	
TI07/458640-007	Shadow *
TI08/458640-008	Bayou *
TI24/458640-024	Poppy
TI25/458640-025	Mao
TI29/458640-029	Onyx
TI31/458640-031	Cloud *
TI38/458640-038	Depth *
TI40/458640-040	Nile
TI41/458640-041	Azure *
TI45/458640-045	Cactus *
TI46/458640-046	Ice *
TI48/458640-048	Neon *
TI50/458640-050	Hydrangea *
TI53/458640-053	Tangelo
TI54/458640-054	Lumine *
TI58/458640-058	Snow
TI60/458640-060	Peridot *
TI61/458640-061	Capri
TI62/458640-062	Ultramarine
TI63/458640-063	Squall
TI66/458640-066	Cassis
TI67/458640-067	Aster

Messenger *continued*	
TI69/458640-069	Cherry
TI70/458640-070	Vibrant
TI71/458640-071	Satsuma *
TI72/458640-072	Maize
TI76/458640-076	Fossil
TI77/458640-077	Ash
TI78/458640-078	Tusk
TI79/458640-079	Oyster
TI81/458640-081	Husk
TI84/458640-084	Robust
TI85/458640-085	Beyond
TI86/458640-086	Voyage
TI87/458640-087	Everglade
TI89/458640-089	Blanch
TI90/458640-090	Longspur
TI91/458640-091	Vireo
TI92/458640-092	Dipper
TI93/458640-093	Gale
TI94/458640-094	Hunter
TI95/458640-095	Lime
TI96/458640-096	Apple
TI97/458640-097	Krill
TI98/458640-098	Catalyst

* Colors available on 20-day lead time.

Price Category C

Manner - Maharam	
54” wide	
100% recycled polyester	
Z2701/466177-001	Magic
Z2702/466177-002	Carob
Z2703/466177-003	Porpoise
Z2704/466177-004	Flint
Z2705/466177-005	Hush
Z2706/466177-006	Nuance
Z2711/466177-011	Ember
Z2712/466177-012	Wagon
Z2713/466177-013	Ablaze
Z2714/466177-014	Peel
Z2716/466177-016	Butterscotch
Z2717/466177-017	Harvest
Z2720/466177-020	Parakeet
Z2722/466177-022	Aquatic
Z2723/466177-023	Cottage
Z2724/466177-024	Dahlia
Z2725/466177-025	Vivid
Z2726/466177-026	Basin
Z2727/466177-027	Schooner
Z2728/466177-028	Slope
Z2729/466177-029	Silverpoint
Z2730/466177-030	Lattice
Z2731/466177-031	Smoky
Z2732/466177-032	Magnetic
Z2733/466177-033	Woad
Z2734/466177-034	Resolute
Z2735/466177-035	Cruise
Z2736/466177-036	Atmospheric
Z2737/466177-037	Cloudburst
Z2738/466177-038	Tidewater
Z2739/466177-039	Firth
Z2740/466177-040	Oceanside
Z2741/466177-041	Grandeur
Z2742/466177-042	Comfort
Z2743/466177-043	Dill
Z2744/466177-044	Poplar
Z2745/466177-045	Citronella
Z2746/466177-046	Passerine

Manner *continued*	
Z2747/466177-047	Southwest
Z2748/466177-048	Roseate
Z2749/466177-049	Charisma
Z2750/466177-050	Siltstone
Z2751/466177-051	Kimono
Z2752/466177-052	Valiant
Z2753/466177-053	Baroness

Merit - Maharam	
54” wide	
76% post-industrial recycled polyester	
24% polyester	
PFOA-Free stain resistant	
88Z01/466444-001	Trickle
88Z02/466444-002	Beluga
88Z03/466444-003	Gunmetal
88Z04/466444-004	Blackout
88Z05/466444-005	Superior
88Z06/466444-006	Ocean
88Z07/466444-007	Highborn
88Z08/466444-008	Immersed
88Z09/466444-009	Rainfall
88Z10/466444-010	Blizzard
88Z11/466444-011	Poolside
88Z12/466444-012	Steel
88Z13/466444-013	Zircon
88Z14/466444-014	Ripple
88Z15/466444-015	Aegean
88Z16/466444-016	Armada
88Z17/466444-017	Hedera
88Z18/466444-018	Rainforest
88Z19/466444-019	Gator
88Z20/466444-020	Vineyard
88Z21/466444-021	Pine
88Z22/466444-022	Kiwi
88Z23/466444-023	Kookaburra
88Z24/466444-024	Bellini
88Z25/466444-025	Sunflower
88Z26/466444-026	Sandstorm

Price category C continued on next page

- Maharam textiles are on assigned lead times A unless otherwise noted.
- Fabric numbers are listed as Herman Miller fabric number/Maharam fabric number.

Price Category C
continued

Merit *continued*	
88Z27/466444-027	Mudder
88Z28/466444-028	Lynx
88Z29/466444-029	Farro
88Z30/466444-030	Manila
88Z31/466444-031	Starfish
88Z32/466444-032	Brass
88Z33/466444-033	Arrow
88Z34/466444-034	Gelato
88Z35/466444-035	Nectarine
88Z36/466444-036	Macaron
88Z37/466444-037	Alert
88Z38/466444-038	Goji
88Z39/466444-039	Cabernet
88Z40/466444-040	Eggplant
88Z41/466444-041	Hawk
88Z42/466444-042	Stag
88Z43/466444-043	Overcast

Metric – Maharam	
54” wide	
51% recycled polyester	
49% polyester	
Z302/466014-002	Fog
Z303/466014-003	Fleece
Z312/466014-012	Cardinal
Z313/466014-013	Lava
Z318/466014-018	Pollen
Z320/466014-020	Alligator
Z323/466014-023	Tar
Z324/466014-024	Anchor
Z326/466014-026	Admiral
Z327/466014-027	Seaport
Z328/466014-028	Scuba
Z329/466014-029	Skate
Z330/466014-030	Hopscotch
Z331/466014-031	Film
Z332/466014-032	Whale
Z333/466014-033	Downpour
Z334/466014-034	Midday
Z335/466014-035	Talisman
Z336/466014-036	Hedgerow
Z337/466014-037	Snorkel

Metric *continued*	
Z338/466014-038	Highway
Z339/466014-039	Canary
Z340/466014-040	Sunny
Z341/466014-041	Aztec
Z342/466014-042	Fruit
Z343/466014-043	Galah
Z344/466014-044	Kiln
Z345/466014-045	Moth

Murmur - Maharam	
55” wide	
100% polyester	
PFOA-Free stain resistant	
8EY01/466446-001	Gust
8EY02/466446-002	Harmonica
8EY03/466446-003	Canopy
8EY04/466446-004	Dim
8EY05/466446-005	Peppercorn
8EY06/466446-006	Cauldron
8EY07/466446-007	Conquer
8EY08/466446-008	Rapids
8EY09/466446-009	Seawater
8EY10/466446-010	Baby
8EY11/466446-011	Elderberry
8EY12/466446-012	Iceberg
8EY13/466446-013	Tallgrass
8EY14/466446-014	Underground
8EY15/466446-015	Biome
8EY16/466446-016	Cask
8EY17/466446-017	Argan
8EY18/466446-018	Sundown
8EY19/466446-019	Ignite
8EY20/466446-020	Sultry
8EY21/466446-021	Sangria

Price Category D

No fabrics available at this time.

Price Category E

Dwell - Maharam	
54” wide	
66% post-industrial	
recycled polyester	
32% post-consumer	
recycled polyester	
PFOA-Free stain resistant	
Latex backing	
89601/466419-001	Sesame
89602/466419-002	Summit
89603/466419-003	Freeze
89604/466419-004	Poolside
89605/466419-005	Teal
89606/466419-006	Mojito
89607/466419-007	Lizard
89608/466419-008	Thunder
89609/466419-009	Foil
89610/466419-010	Wine
89611/466419-011	Firecracker

Skein - Maharam	
54” wide	
56% recycled polyester	
44% polyester	
Z3201/466170-001	Burrow
Z3204/466170-004	Sumac
Z3205/466170-005	Pomegranate
Z3206/466170-006	Cavern
Z3207/466170-007	Bitter
Z3208/466170-008	Cinder
Z3209/466170-009	Dock
Z3210/466170-010	Cadet
Z3211/466170-011	Marsh

- Maharam textiles are on assigned lead times A unless otherwise noted.
- Fabric numbers are listed as Herman Miller fabric number/Maharam fabric number.

Price Category F

Apt – Maharam	
54” wide	
100% polyurethane/silicone	
Ink-resistant protective top coat	
Polyester backing	
82T01/466392-001	Coconut
82T02/466392-002	Vibe
82T03/466392-003	Stampede
82T04/466392-004	Lumber
82T05/466392-005	Gingerbread
82T06/466392-006	Hickory
82T07/466392-007	Constellation
82T08/466392-008	Labyrinth
82T09/466392-009	Sketch
82T10/466392-010	Glacier
82T11/466392-011	Cobblestone
82T12/466392-012	Iris
82T13/466392-013	Nocturnal
82T14/466392-014	Fluid
82T15/466392-015	Eden
82T16/466392-016	Galactic
82T17/466392-017	Shoreline
82T18/466392-018	Jade
82T19/466392-019	Garden
82T20/466392-020	Botanic
82T21/466392-021	Chartreuse
82T22/466392-022	Crepe
82T23/466392-023	Lyric
82T24/466392-024	Turmeric
82T25/466392-025	Bengal
82T26/466392-026	Core
82T27/466392-027	Mantle
82T28/466392-028	Sorbet
82T29/466392-029	Bloom
82T30/466392-030	Lotus
82T31/466392-031	Fortress
82T32/466392-032	Oak
82T33/466392-033	Castle
82T34/466392-034	Follow
82T35/466392-035	Elixir
82T36/466392-036	Charm
82T37/466392-037	Descend

Instill – Maharam	
54” wide	
100% polyurethane	
Ink-resistant protective top coat	
Polyester backing	
74M01/466351-001	Page
74M02/466351-002	Limestone
74M03/466351-003	Bobwhite
74M04/466351-004	Loafer
74M05/466351-005	Moor
74M06/466351-006	Barley
74M07/466351-007	Shaker
74M08/466351-008	Doe
74M09/466351-009	Ride
74M10/466351-010	Squire
74M11/466351-011	Tannin
74M12/466351-012	Vitis
74M13/466351-013	Sonar
74M14/466351-014	Quail
74M15/466351-015	Brittanic
74M16/466351-016	Narwhal
74M17/466351-017	Synth
74M18/466351-018	Stowaway
74M19/466351-019	Koala
74M20/466351-020	Dorsal
74M21/466351-021	Stealth

Strum - Maharam	
54” wide	
100% polyurethane	
with silver-based antimicrobial	
Z3301/466122-001	Overcast
Z3302/466122-002	Ridge
Z3304/466122-004	Pigeon
Z3305/466122-005	Char
Z3306/466122-006	Cabin
Z3307/466122-007	Bur
Z3308/466122-008	Abalone
Z3309/466122-009	Prawn
Z3310/466122-010	Gourd
Z3311/466122-011	Wheat
Z3312/466122-012	Lemongrass

Price Category G

Compound - Maharam	
54” wide	
100% polyurethane	
silane-based antimicrobial	
ZC201/466196-001	001
ZC202/466196-002	002
ZC203/466196-003	003
ZC204/466196-004	004
ZC205/466196-005	005
ZC206/466196-006	006
ZC207/466196-007	007
ZC208/466196-008	008
ZC209/466196-009	009
ZC210/466196-010	010
ZC211/466196-011	011
ZC212/466196-012	012
ZC213/466196-013	013
ZC214/466196-014	014
ZC215/466196-015	015
ZC216/466196-016	016
ZC217/466196-017	017
ZC218/466196-018	018
ZC219/466196-019	019

Divina Melange — Maharam	
59” wide	
100% wool	
TG01/460830-120	120
TG02/460830-170	170
TG03/460830-180	180
TG04/460830-220	220
TG05/460830-260	260
TG06/460830-280	280
TG07/460830-871	871
TG08/460830-821	821
TG11/460830-731	731
TG12/460830-681	681
TG13/460830-631	631
TG16/460830-581	581
TG17/460830-531	531
TG18/460830-521	521
TG19/460830-571	571
TG21/460830-471	471
TG24/460830-971	971
TG25/460830-925	925

Divina Melange *continued*	
TG26/460830-620	620
TG27/460830-147	147
TG28/460830-227	227
TG29/460830-237	237
TG30/460830-277	277
TG31/460830-367	367
TG32/460830-427	427
TG33/460830-457	457
TG34/460830-467	467
TG35/460830-517	517
TG36/460830-527	527
TG37/460830-547	547
TG38/460830-557	557
TG39/460830-567	567
TG40/460830-597	597
TG41/460830-617	617
TG42/460830-647	647
TG43/460830-677	677
TG44/460830-687	687
TG45/460830-747	747
TG46/460830-757	757
TG47/460830-777	777
TG48/460830-787	787
TG49/460830-917	917
TG50/460830-937	937
TG51/460830-967	967
TG52/460830-977	977

Steelcut Trio - Maharam	
55” wide	
90% wool	
10% nylon	
V2501/465906-105	105
V2502/465906-113	113
V2503/465906-124	124
V2504/465906-133	133
V2506/465906-153	153
V2507/465906-195	195
V2508/465906-205	205
V2509/465906-213	213
V2513/465906-253	253
V2514/465906-283	283
V2518/465906-383	383
V2523/465906-453	453
V2525/465906-515	515

Price category G continued on next page

- Maharam textiles are on assigned lead times A unless otherwise noted.
- Fabric numbers are listed as Herman Miller fabric number/Maharam fabric number.

Price Category G
continued

Steelcut Trio *continued*	
V2526/465906-533	533
V2527/465906-553	553
V2529/465906-645	645
V2534/465906-713	713
V2542/465906-865	865
V2543/465906-883	883
V2544/465906-915	915
V2545/465906-933	933
V2546/465906-945	945
V2547/465906-953	953
V2548/465906-965	965
V2549/465906-983	983
V2550/465906-176	176
V2551/465906-226	226
V2552/465906-236	236
V2553/465906-246	246
V2554/465906-266	266
V2555/465906-276	276
V2556/465906-336	336
V2557/465906-376	376
V2558/465906-416	416
V2559/465906-426	426
V2560/465906-436	436
V2561/465906-446	446
V2562/465906-466	466
V2563/465906-476	476
V2564/465906-506	506
V2565/465906-526	526
V2566/465906-576	576
V2567/465906-616	616
V2568/465906-636	636
V2569/465906-666	666
V2570/465906-686	686
V2571/465906-716	716
V2572/465906-746	746
V2573/465906-756	756
V2574/465906-776	776
V2575/465906-796	796
V2576/465906-806	806
V2577/465906-906	906
V2578/465906-916	916
V2579/465906-946	946
V2580/465906-966	966
V2581/465906-976	976
V2582/465906-996	996

Price Category H

Circles — Maharam	
55” wide	
70% cotton	
30% polyester	
ZT01/458310-001	Khaki
ZT02/458310-002	Fatigue
ZT03/458310-003	Document
ZT04/458310-004	Engine
ZT05/458310-005	Charcoal

Dot Pattern — Maharam	
55” wide	
71% cotton	
29% polyester	
ZK01/458300-001	Document
ZK02/458300-002	Taupe
ZK04/458300-004	Red
ZK05/458300-005	Navy

Small Dot Pattern — Maharam	
55” wide	
71% cotton	
29% polyester	
ZL01/458320-001	Document
ZL02/458320-002	Sand
ZL03/458320-003	Khaki
ZL04/458320-004	Taupe
ZL05/458320-005	Charcoal
ZL06/458320-006	Document Reverse
ZL07/458320-007	Red
ZL08/458320-008	Yellow
ZL09/458320-009	Green

Price Category I

Cursive – Maharam	
54” wide	
67% solution-dyed acrylic	
33% solution-dyed polyester	
PFOA-Free stain resistant	
7CW01/466335-001	Fast
7CW02/466335-002	Hunt
7CW03/466335-003	Beachcomb
7CW04/466335-004	Twist
7CW05/466335-005	Swift
7CW06/466335-006	Jetstream
7CW07/466335-007	Inkwell
7CW08/466335-008	Rubber

Price Category J-V

No fabrics available at this time.

- Maharam textiles are on assigned lead times A unless otherwise noted.
- Fabric numbers are listed as Herman Miller fabric number/Maharam fabric number.

For more information about our products and services or to see a list of dealers, please visit us at HermanMiller.com or call (800) 851 1196.

© 2019 Herman Miller, Inc., Zeeland, Michigan

Distribution Rights

Working together since 1956, Herman Miller and Vitra are the authentic sources of designs by Charles and Ray Eames, Alexander Girard, and George Nelson. All the designs shown in this book are protected by law. Herman Miller has obtained all rights to make and sell these designs. Also, Herman Miller holds exclusive worldwide manufacturing and distribution rights for these products with the following exceptions:

Charles and Ray Eames, George Nelson, and Alexander Girard—Worldwide distribution rights for furniture in all areas except Europe and the Middle East. For those areas, please contact Vitra.

Isamu Noguchi—Worldwide distribution rights for the Noguchi Rudder Table. Distribution rights for the Noguchi Table in North America and Central America only. For all other areas, please contact Vitra.

Magis—Exclusive distribution rights in the US and Canada. For all other areas, please contact Magis.

Mattiazzi—Exclusive distribution rights in the US and Canada. For all other areas, please contact Mattiazzi.

® HermanMiller, ●, Action Office, Aeron, Aside, Avive, Canvas Office Landscape, Caper, Celle, Co/Struc, Eames, Embody, Equa 2, Ergon 3, Ethospace, Exclave, Fine-Tune, FlexFront, Formcoat, Ground Cloth, Herman Miller Healthcare, Layout Studio, Maharam, Meridian, Mirra, Motia, Passage, Pellicle, Perspectives, Plex, PostureFit, Quadrant, Resolve, Sayl, Setu, Thrive, Tu, Y-Tower, and Z-Axis are among the registered trademarks of Herman Miller, Inc., and its owned subsidiaries.

™ AireWeave, Bubbletack, Cellular Suspension, Compass, Connect, Cosm, DOT, Durawrap, Everywhere, Flex-Edge, Hopsak 2, Intent, Iota, Keyless Entry, Latitude, Lino, Lyris 2, Mora, Multiscrim, Nelson, Nevi, Pedastools, Renew, Stackable, Swoop, TriFlex, Twist, Verus and Vista are among the trademarks of Herman Miller, Inc., and its owned subsidiaries.

SChemsurf® is a registered trademark of Wilsonart International.

Corian® is a registered trademark of E.I. du Pont de Nemours and Company Corporation.

FLEXNET™ is a trademark of Milliken & Company.

Floor Saver Glide® is a registered trademark of Carpin Manufacturing, Inc.

Geiger® is a registered trademark of Geiger International.

Microsoft® and Natural® Keyboard are registered trademarks of Microsoft Corporation.