GSA prices effective April 1, 2019
(based on January 7, 2019, commercial price list)
Published April 2019

Workspaces

Canvas Office Landscape® Channel

General Services Administration
Federal Supply Service
Authorized Federal Supply Schedule Price List

Online access to contract ordering information, terms and conditions, up-to-date pricing, and the option to create an electronic delivery order is available through GSA Advantage!®, a menu-driven database system. The Internet address for GSA Advantage! is www.gsaadvantage.gov.

Office Furniture
FSC Group 71, Part 1
Contract Number: GS-03F-036DA
Contract Period: December 21, 2015—December 20, 2020

Herman Miller, Inc.
855 East Main Avenue
Zeeland, Michigan 49464
(616) 654 3000 Phone
(616) 654 8278 Fax
www.HermanMiller.com/government

Business Size: Large

1a. Special Item Numbers (SIN)

SIN 71-1
Packaged Offices

SIN 711-1
Furniture Systems

SIN 711-2
Computer Furniture

SIN 711-3
Filing and Storage Cabinets

SIN 711-11

Tables and Accessories

SIN 711-16

Upholstered Seating

SIN 711-18

Multi-Purpose Seating

SIN 711-91

Project Management

Services under this SIN may be used only in conjunction with the purchase of new furniture. Please contact your local Herman Miller representative to discuss the available labor categories (listed below). The hourly rates listed are "Not To Exceed" or "NTE" values.

Furniture Project Manager: $64.75 per hour
Furniture Project Coordinator: $49.00 per hour
Build-Out Project Manager: $80.00 per hour

SIN 711-93

Reconfiguration and Relocation Services

Reconfiguration and Relocation Services will be provided by Herman Miller, Inc., or its participating dealer based on a fee not to exceed $55 per hour, which applies to services totaling $150,000 (per SIN) and below only. Services above $150,000 shall be negotiated on a case-by-case basis. This SIN may only be used with the purchase of new product under SIN 711-1.

See * Additional Notes for Installation & Reconfiguration and Relocation Services.

SIN 711-94

Design/Layout

Design service will be provided by Herman Miller, Inc., or its participating dealer based on a fee not to exceed $65 per hour.

SIN 711-95

Installation Services

Installation Services will be provided by Herman Miller, Inc., or its participating dealer based on a fee not to exceed $55 per hour ($82.50 per hour for after-hours Installation), which applies to services totaling $150,000 (per SIN) and below only. Services above $150,000 shall be negotiated on a case-by-case basis.

See * Additional Notes for Installation & Reconfiguration and Relocation Services.

* Additional Notes for Installation & Reconfiguration and Relocation Services:

FOB Destination (Drop Ship): Price includes product delivery to the site, brought to the tailgate of the truck. The purchaser is responsible for unloading.

Prices effective up to the maximum order by SIN only. Above the MO, pricing shall be negotiated on a case-by-case basis between the client and local dealer.

Standard Services are Subject to the Following Conditions:

Installation will be performed during normal weekday working hours.

Adequate facilities for delivery, unloading, moving and staging/storing the product during the installation process shall be provided.

Service work will not be hindered by other trades.

Electric, heat, and adequate elevator service will be furnished without charge.

The immediate installation area shall be complete and free of debris including the carpet/flooring before installation commences.

Any work requiring a licensed electrician is the responsibility of the buyer.

Additional Charges May Apply For:

Major Metro Markets and any non-ground floor installation.

Major Metro Markets include large population centers and urban environments.

Installation in a clinical/medical environment.

Special restrictions or limits established by local laws, ordinances or the directions of the buyer, including but not limited to restrictions on transportations of materials, street access to the job site and/or dock facilities.

Installations outside of a 50 mile radius of the servicing dealer.

Local Prevailing Wage and/or Union Labor Rates.

Any additional charges shall be quoted by the dealer and approved by the buyer prior to performance of the work.

SIN 711-96

Leasing

Contact Herman Miller participating government dealer for current leasing information.

SIN 711-99
New Product Introductions

SIN 711-500

Order-Level Materials (OLMs)

This SIN is only for products and/or services used in direct support of the purchase of new furniture. It requires approval from the ordering Contract Officer. Please contact your local Herman Miller representative to discuss the appropriate use of this SIN.

1b. Lowest Priced Model

SIN 711-1:	G9999.B	$9
SIN 711-2:	6-5-D	$40
SIN 711-3:	L29P.15	$11
SIN 711-11:	DT9A.	$39
SIN 711-16:	OA401	$43
SIN 711-18:	AS90598	$51
SIN 711-99:	BVP3.S	$12

1c. Not applicable

2. Maximum Order

SIN 711-1, SIN 711-2

$500,000 net product value

SIN 711-3, SIN 711-11

$300,000 net product value

SIN 711-16, SIN 711-18

$200,000 net product value

SIN 711-93

$150,000

SIN 711-94

$150,000

SIN 711-95

$150,000

SIN 711-96

$500,000 net product value

SIN 711-99

$50,000 net product value

SIN 711-500

$100,000

3. Minimum Order

$100 net

4. Geographic Coverage

Continental U.S.

Orders for Alaska, Hawaii, and Puerto Rico will be shipped F.O.B. inland carrier point of exportation.

5. Point of Production

Zeeland, Ottawa County, Michigan

Spring Lake, Ottawa County, Michigan

6. Pricing

Prices shown are list. Discounts include Industrial Funding Fee.

SIN 711-1

Product: Selected Action Office 1, Action Office 2, C-Style Overhead Storage, Ethospace System, Quadrant Pedestals, Supplemental Products, Tu Pedestals, and approved Herman Miller Options Products.

Standard Lead Time	Single Order Net Purchase	Discount From list
	$100 - 250,000	73.8%
	$250,001 - 500,000	76.8%

SIN 711-1

Product: Selected Nevi™ Tables, Renew™ Tables, Renew Link and approved Herman Miller Options Products

Standard Lead Time	Single Order Net Purchase	Discount From List
	$100 - 500,000	73.8%

SIN 711-1

Product: Selected Motia™ Tables, and approved Herman Miller Options Products

Standard Lead Time	Single Order Net Purchase	Discount From List
	$100 - 500,000	73.8%

SIN 711-1

Product: Tu Wood Pedestals and approved Herman Miller Options Products

Standard Lead Time	Single Order Net Purchase	Discount From List
	$100 - 300,000	74.3%

SIN 711-1

Product: Selected Canvas Office Landscape (Beam, Dock, Group, Metal Storage, Private Office, Vista, Wall, and Wood Storage) and approved Herman Miller Options Products

Standard Lead Time	Single Order Net Purchase	Discount From List
	$100 - 500,000	74.8%

SIN 711-1

Product: Selected Layout Studio® and approved Herman Miller Options Products

Standard Lead Time	Single Order Net Purchase	Discount From List
	$100 - 500,000	60.7%

SIN 711-1

Product: Selected Meridian Pedestals and approved Herman Miller Options Products

Standard Lead Time	Single Order Net Purchase	Discount From List
	$100 - 500,000	64.2%

SIN 711-1

Product: Selected Thrive Portfolio and approved Herman Miller Options Products

Standard Lead Time	Single Order Net Purchase	Discount From List
	$100 - 250,000	62%
	$250,001 - 500,000	66.4%

SIN 711-2

Product: Approved Herman Miller Options Products

Standard Lead Time	Single Order Net Purchase	Discount From List
	$100 - 500,000	58.7%

SIN 711-3

Product: Meridian Laterals, Towers, and Storage products and approved Herman Miller Options Products

Standard Lead Time	Single Order Net Purchase	Discount From List Laterals	Verticals	Towers & Storage
	$100 - 300,000	67.3%	66.3%	62.7%

SIN 711-3

Product: Tu Lateral Files, Tu Storage, Tu Towers, Tu Wood Cases, Tu Wood Cubbies, Tu Wood Credenzas, Tu Wood Towers, and approved Herman Miller Options Products

Standard Lead Time	Single Order Net Purchase	Discount From List
	$100 - 300,000	74.3%

SIN 711-11

Product: Selected Tables and Accessories and approved Herman Miller Options Products

Standard Lead Time	Single Order Net Purchase	Discount From List
Avive® Tables	$100 - 250,000	72.8%
	$250,001 - 500,000	74.8%
Herman Miller Eames® Tables	$100 - 250,000	73.6%
	$250,001 - 300,000	77.6%
Everywhere™ Tables	$100 - 300,000	72.8%

SIN 711-16

Product: Swoop upholstered seating products and approved Herman Miller Options Products

Standard Lead Time	Single Order Net Purchase	Discount From List
Plex Lounge Furniture	$100 - 200,000	59.5%
Swoop™	$100 - 200,000	60.7%

SIN 711-18

Product: Selected Seating and approved Herman Miller Options Products

Standard Lead Time	Single Order Net Purchase	Discount From List
Aeron®	$100 - 200,000	64.5%
Aside®	$100 - 200,000	64.2%
Caper®	$100 - 200,000	61.5%
Celle®	$100 - 200,000	59.7%
Cosm™	$100 - 200,000	61.7%
Embody®	$100 - 200,000	59.7%
Keyn	$100 - 200,000	57.7%
Lino™	$100 - 200,000	63.7%
Mirra® 2	$100 - 200,000	61.7%
Sayl®	$100 - 200,000	62.2%
Setu®	$100 - 200,000	59.7%
Verus™	$100 - 200,000	63.7%

SIN 711-99

Product: Selected Exclave™, Locale®, Public Office Landscape®, Resolve® System, and approved Herman Miller Options Products

Standard Lead Time	Single Order Net Purchase	Discount From List
Exclave	$100 - 50,000	61.7%
Intent Solution	$100 - 50,000	58.7%
Locale	$100 - 50,000	63.7%
Public Office Landscape	$100 - 50,000	61.7%
Resolve System	$100 - 50,000	69.8%

7. Quantity Discounts

Reference item #6.

8. Payment Term

Net 30 days

9. Government Commercial Credit Card

a. Government commercial credit cards are accepted below the micropurchase threshold.

b. Government commercial credit cards are accepted above the micropurchase threshold.

10. Foreign Items

None

11. Time of Delivery

a. 90 day ARO

b. Expedited delivery: Items listed in the 10-Day section of the catalogs are available for expedited delivery.

c. Overnight/2-day delivery: Select items may be available for overnight or 2-day delivery. Contact Herman Miller or a participating dealer for availability and rates.

d. Urgent requirements: Agencies may contact contractor or participating dealer to request faster delivery.

12. F.O.B.

F.O.B. destination except Alaska, Hawaii, and Puerto Rico, which will be shipped F.O.B. inland carrier point of exportation.

13. Ordering Address

a. Herman Miller, Inc.,
Government Customer Care 0161
855 East Main Avenue
Zeeland MI 49464.

b. For supplies and services, the ordering procedures information on Blanket Purchase Agreements (BPA's) and a sample BPA can be found at the GSA/FSS Schedule homepage (www.fss.gsa.gov/schedules).

14. Payment Address.

Herman Miller, Inc.
22764 Network Place
Chicago, IL 60673-1227

15. Warranty

Herman Miller, Inc., commercial warranty applies.

16. Export Packing Charge

Prices supplied on request.

17. Terms and Conditions of Government Purchase Card Acceptance

(any thresholds above the micropurchase level)

None.

18. Rental Maintenance and Repair Terms

Not applicable

19. Terms and Conditions of Installation

Installation Services will be provided by Herman Miller, Inc., or its participating dealer based on a fee not to exceed $55 per hour ($82.50 per hour for after-hours Installation), which applies to services totaling $150,000 (per SIN) and below only. Services above $150,000 shall be negotiated on a case-by-case basis.

Additional Notes for Installation & Reconfiguration and Relocation Services:

FOB Destination (Drop Ship): Price includes product delivery to the site, brought to the tailgate of the truck. The purchaser is responsible for unloading.

Prices effective up to the maximum order by SIN only. Above the MO, pricing shall be negotiated on a case-by-case basis between the client and local dealer.

Standard Services are Subject to the Following Conditions:

Installation will be performed during normal weekday working hours.

Adequate facilities for delivery, unloading, moving and staging/storing the product during the installation process shall be provided.

Service work will not be hindered by other trades.

Electric, heat, and adequate elevator service will be furnished without charge.

The immediate installation area shall be complete and free of debris including the carpet/flooring before installation commences.

Any work requiring a licensed electrician is the responsibility of the buyer.

Additional Charges May Apply For:

Major Metro Markets and any non-ground floor installation.

Major Metro Markets include large population centers and urban environments.

Installation in a clinical/medical environment.

Special restrictions or limits established by local laws, ordinances or the directions of the buyer, including but not limited to restrictions on transportations of materials, street access to the job site and/or dock facilities.

Installations outside of a 50 mile radius of the servicing dealer.

Local Prevailing Wage and/or Union Labor Rates.

Any additional charges shall be quoted by the dealer and approved by the buyer prior to performance of the work.

20. Terms and Conditions of Repair Parts

Not applicable

21. Service and Distribution Points

For service and distribution points nearest you, call (800) 851 1196.

22. Participating Dealers

Access Herman Miller web site for current list of participating dealers: www.HermanMiller.com/government.

23. Preventive Maintenance

Not applicable

24a. Special Attributes.

2018

Herman Miller receives the Corporation of the Year—Consumer Products award from the Michigan Minority Supplier Development Council.

Herman Miller achieves the Advanced Excellence in Supplier Diversity Award from the Great Lakes Women's Business Council for doing business with women-owned suppliers.

As one of the top-scoring companies in the industry for the fourteenth consecutive year, Herman Miller has qualified for inclusion in RobecoSAM's 2018 Sustainability Yearbook and received the Silver Class distinction for excellent sustainability performance—economic, environmental, and social.

Aeron receives Good Design Award from The Chicago Athenaeum Museum of Architecture and Design.

The Cosm Chair won the 2018 Best of NeoCon Gold Award in the Ergonomic Seating Category, the Interior Design HiP Award in the Ergonomic Seating Category, and a #MetropolisLikes Award. Cosm also won Mix Interiors "Product of the Year—Task" award.

For the 11th consecutive year, Herman Miller received a perfect score on the Corporate Equality Index and we were designated as Best Place to Work for LGBT equality. This report evaluates U.S. companies in terms of diversity, particularly their LGBT-related policies and practices.

2017

Herman Miller was named the 2017 "Corporation of the Year" in the consumer products sector by the Michigan Minority Supplier Development Council (MMSDC).

Herman Miller has received a 2017 SEAL (Sustainability, Environmental Achievement and Leadership) Business Sustainability Award.

Herman Miller has earned the 4 Star Diversity Visionary Award. This award celebrates the diversity, equality, and inclusion work of Herman Miller. The award is presented at the annual Diversity Equity Inclusion Summit, held by the Grand Rapids Area Chamber of Commerce.

Herman Miller named one of the Best and Brightest in Wellness for the fifth year in a row.

Working Mother magazine has recognized Herman Miller as one of the 2017 Working Mother 100 Best Companies.

Herman Miller earned our tenth consecutive perfect score in Human Rights Campaign (HRC) Foundation's 2017 Corporate Equality Index.

As one of the top-scoring companies in our industry for the thirteenth consecutive year, Herman Miller has qualified for inclusion in RobecoSAM's 2017 Sustainability Yearbook and received the Bronze Class distinction for our excellent economic, environmental, and social sustainability performance.

Herman Miller has once again earned the WorldatWork Seal of Distinction, a unique standard of excellence in work-life effectiveness that shows we provide a distinct, mutually beneficial workplace experience.

2016

Herman Miller was recognized as the Business of the Year at the Annual Meeting of the West Michigan Environmental Action Council (WMEAC). This award goes to the business with the greatest depth and breadth of support, unwavering dedication to environmental action in West Michigan, and a strong corporate commitment to environmental advocacy.

The 101 Best and Brightest Sustainable Companies once again (fifth consecutive year) recognized Herman Miller as an organization in Michigan (and for the first time, in the nation) that exhibits leadership and innovation in its approach to sustainability.

Herman Miller has been recognized by the Michigan Minority Supplier Development Council (MMSDC), as a "Corporation of the Year", and we also received a "2016 Excellence in Supplier Diversity Award" from the Great Lakes Women's Business Council. Additionally, we are the only West Michigan company this year to receive an "Ambassadors Championing Excellence" Award from the MMSDC.

Plex Lounge Furniture from Herman Miller receives #MetropolisLikes award at NeoCon 2016.

Plex Lounge Furniture from Herman Miller receives Interior Design HiP Award for Workplace Seating/Lounge at NeoCon 2016.

Spot Stools from Herman Miller Collection receive Interior Design HiP Award for Hospitality Seating at NeoCon 2016.

Herman Miller has been named a 2020 Women on Boards Winning Company. Companies selected for this recognition are considered champions of board diversity as 20 percent or more of their board seats are occupied by women.

Herman Miller selected for inclusion in the 2016 RobecoSAM Sustainability Yearbook for twelfth consecutive year.

Herman Miller again earns the WorldatWork Work-Life 2016 Seal of Distinction. This award identifies organizations that focus on programs that promote work-life balance and overall well-being.

2015

Herman Miller earns ninth consecutive perfect score in Human Rights Campaign (HRC) Foundation's 2016 Corporate Equality Index and we were designated as Best Place to Work for LGBT equality.

This is the fourth consecutive year that Herman Miller was named one of Michigan's Best and Brightest Sustainable Companies.

Herman Miller has received the Best and Brightest in Wellness Award for the third year in a row. This program is an innovative initiative that recognizes and celebrates quality and excellence in health awareness.

Herman Miller received the Forest Stewardship Council (FSC) Leadership Award for longstanding commitment to manufacturing with wood sourced from responsibly managed forests, which reduces environmental impacts by protecting against deforestation and forest degradation.

Herman Miller accepted its second Excellence in Reusable Packaging Award from the Reusable Packaging Association.

Herman Miller has once again been recognized for its commitment to best-in-class economic, environmental, and societal sustainability, earning a spot on the prestigious Dow Jones Sustainability Index (DJSI) for the twelfth consecutive year. We are the only contract furniture company recognized globally for its corporate sustainability leadership.

Herman Miller selected for inclusion in the 2015 RobecoSAM Sustainability Yearbook; awarded Bronze Class distinction for excellent sustainability performance for the second consecutive year.

Herman Miller received a Michigan Business Pollution Prevention (MBP3) Certificate – a recognition given by the Michigan Department of Environmental Quality (MDEQ) to organizations committed to environmental stewardship, conservation, and sustainable operations. This basic partnership with the MDEQ, which we've maintained since 1998, makes us eligible for our Clean Corporate Citizen (CCC) status that began in 2004 and our Environmental Leader status, which we received for the first time this past year.

MedAssets named Herman Miller Healthcare as Platinum Suppliers. MedAssets, a large group purchasing organization, helps providers enhance operational and financial performance so they can sustainably serve the needs of their community.

Herman Miller honored with five of 20 spots for the Michigan Environmental Leaders Award by the Michigan Department of Environmental Quality for our outstanding, voluntary environmental stewardship.

Renew Sit-to-Stand tables recognized on Record Products 2014 list by Architectural Record.

Herman Miller was again awarded a perfect score in the 2015 Corporate Equality Index. This is the eighth consecutive year we received a perfect score.

2014

Herman Miller has received the Best and Brightest in Wellness Award for the second year in a row. This program is an innovative initiative that recognizes and celebrates quality and excellence in health awareness.

Herman Miller's Locale wins International Design Excellence Awards (IDEA) Gold in the Office & Productivity category.

Herman Miller achieves eleventh consecutive listing on Dow Jones Sustainability World Index, an international stock portfolio that evaluates the annual performance of the world's largest 2500 companies using economic, environmental, and social criteria, known as the "triple bottom line" of sustainability.

2013

Herman Miller achieves tenth consecutive listing on Dow Jones Sustainability World Index.

Herman Miller has received the Best and Brightest in Wellness Award. This program is an innovative initiative that recognizes and celebrates quality and excellence in health awareness.

Herman Miller Earns Perfect Score on the Corporate Equality Index. We are one of only 303 major U.S. businesses to receive a perfect score in 2013, an achievement we have now obtained seven years in a row.

Herman Miller is listed in Forbes Magazine inaugural "Platinum List" of America's 400 best managed, large companies.

For the second consecutive year, Herman Miller is honored as one of West Michigan's "101 Best and Brightest Sustainable Companies".

2012

Herman Miller accepted its first Excellence in Reusable Packaging Award from the Reusable Packaging Association.

Herman Miller is named "Corporation of the Year" in the commercial products sector by the Michigan Minority Supplier Development Council.

In July 2012 Herman Miller was inducted into the Made in the USA Hall of Fame. Herman Miller is one of only 20 companies across the nation to receive this distinction.

Herman Miller achieves ninth consecutive listing on Dow Jones Sustainability World Index.

Herman Miller is honored as one of West Michigan's 101 Best and Brightest Sustainable Companies.

The Sustainable Asset Management (SAM) group selected Herman Miller for inclusion in "The Sustainability Yearbook 2012" and has awarded Herman Miller both the "SAM Sector Leader" and "SAM Sector Mover" distinctions.

Herman Miller was named one of 16 Section Leaders on Climate Counts 2011-2012 Scorecard Report, making us the industry leader for Home and office Furnishings.

SGS International Certification Services, Inc., recognizes Herman Miller's manufacturing sites, Midwest Distribution Center, and Design Yard for initial certification to the OHSAS 18001 standard as well as re-certification to ISO 14001.

2011

Trust Across America, a company dedicated to unraveling the complexities of trustworthy business behavior, listed Herman Miller as one of their "Top Ten Most Trustworthy Companies in America 2011."

The U.S. Environmental Protection Agency (EPA) selected Herman Miller, as a WasteWise Gold Achievement—Climate Change winner.

Herman Miller achieves eighth consecutive listing on Dow Jones Sustainability World Index, an international stock portfolio that evaluates the annual performance of the world's largest 2500 companies using economic, environmental, and social criteria, known as the "triple bottom line" of sustainability.

The Michigan Minority Supplier Development Council (MMSDC) named Herman Miller as its "Corporation of the Year" in the commercial products sector. This was the fifth time Herman Miller has received this award since 2005.

Herman Miller accepted its third Neighborhood Environmental Partners (NEP) award from the Michigan Department of Natural Resources and Environment.

Herman Miller receives the Reader's Choice award from TreeHugger's Best of Green: Design and Architecture category for the SAYL chair.

Herman Miller earns Citibank's Global Environmental Vendor of the Year award.

The SAYL chair from Herman Miller was dubbed the "Product Design of the Year" from the 2010 International Design Awards (IDA) jury.

Herman Miller Healthcare's Compass system was awarded a 2011 Medical Design Excellence Award (MDEA) for its research-based design and ability to be used in a variety of healing spaces, while simultaneously improving the overall delivery of healthcare.

The Sustainable Asset Management (SAM) Group selected Herman Miller for inclusion in the "Sustainability Yearbook 2011" and awarded us both the "SAM Sector Leader" and "SAM Sector Mover" distinctions.

Herman Miller has received the top rating for a fourth consecutive year in the Human Rights Campaign (HRC) Foundation's eighth annual Corporate Equality Index. The "Best Places to Work for LGBT Equality" distinction is awarded to businesses that scored 100% on the HRC Foundation's 2011 Corporate Equality Index.

Herman Miller again tops contract furniture industry in FORTUNE's 'Most Admired' Companies survey. For the 23rd time in 25 years.

24b. Section 508 Compliance

Not applicable

25. Data Universal Numbering System (DUNS): 00-601-2801

26. Registered in System for Award Management (www.SAM.gov) Database

27. Cancellation

Prior to production, no cancellation charge will apply. After production, only actual cost incurred that the contractor can demonstrate if items are sold after 3 months.

28. Restocking Charges

Agencies must notify the contractor for authorization prior to returning any items. The customer agency will be required to pay all packaging and return freight charges. A restocking fee of 50% for Systems Furniture and 35% for all other product lines will be charged for any returned items.

Herman Miller Miscellaneous Information:

Federal ID Number: 38-0837640

Commercial and Government Entity Code (CAGE): 40636

Data Universal Numbering System (DUNS) 00-601-2801

Commercial Entity Code (CEC): 00702290J

Contents

Introduction	**page 2**
Canvas Office Landscape® Channel	**3**
Frame	5
Counterweight	7
Gallery Panel	8
Frame Structure	13
Connectors and Covers	18
Top Caps	25
Tiles	34
Energy Distribution	43
Screens	56
Indices	**71**
By Name	71
By Number	73
Appendices	
20-Day or Less/Assigned Lead-Time Order Information	
Stain-to-Match Program	
Customer's Own Material Order Information-Workspaces	
Proprietary Textiles Application Chart-Workspaces	
Proprietary Textile Colors-Workspaces	
Maharam® Application Chart-Workspaces	
Maharam Colors-Workspaces	

For the latest materials information, refer to the Materials pages on HermanMiller.com.

Introduction

A Note on the Organization of This Book

There are a few signals that will help you understand the organization of this book. Once you know them, you should be able to find your way around easily.

Like a newspaper, this book is formatted with columns of text and illustrations that run vertically.

Information wraps from one column to the next and continues for as many pages as it needs to.

Black bars are clues.

A black bar at the top of a page signals the start of information about a product.

This information is divided into two sections, each signaled by a black bar. Product Information includes a description, additional notes, and dimensional drawings. Specification Information, which always begins at the top of a column, includes a series of steps. Each step represents a decision you need to make in order to complete your product number. Steps must be followed sequentially. The number of pages needed to complete information on a product varies; some will be complete in one page; others may fill three or four pages. Just continue going through the steps until you run into the next product, signaled by the black bar at the top of the page.

Black tabs running along the outside edge of the page help you locate what section you are in or what section you want to go to. You can thumb forwards or backwards to find a section; tabs and text appear on both sides of the page.

The additional pages in the back of the book include the appendices and indices. They are signaled by a long black bar running along the outside edge of the page.

The index is presented two ways.

The first index is in alphabetical order by product name. It can be helpful if you are new to the products and numbering scheme or if you are looking for a type of product, such as work chair or round table.
The second index is by product number. It lists, in alphanumeric order, the base product number, typically a five-digit number.

This book is effective April 1, 2019, subject to change without notice. Products may be purchased from authorized Herman Miller dealers who will quote prices upon request. For more information about our products and services or to see a list of dealers, visit www.HermanMiller.com.

All prices are list prices in US Dollars. Additional services, such as planning services, design, storage, and installation, are not included and must be added to these prices when the additional services are requested.

Illustrations, specifications, and prices are based on the latest information at the time of publication. The right is reserved to make changes at any time without notice in prices, fabrics, finishes, materials, specifications, and models, and also to discontinue models and finishes.

Dimensions shown in the drawings are engineering drawing dimensions rounded up to the nearest 1/8". Product is shipped set up or knocked down. Products that include "Shipped knocked down" in the description require some assembly. If this statement does not appear in the description, the product is shipped assembled.

Service problems are normally handled by a Herman Miller authorized dealer. Where this cannot be accomplished on a local level, service problems should be referred to the Customer Care Representative for your region, Herman Miller, Inc., Zeeland, Michigan 49464.

20-Day or Less/Assigned Lead-Time Shipments

All products and options in this price book not designated by an Assigned Program icon A will ship in **20 business days or less** after being acknowledged by Herman Miller.

Products and options designated by an A are on the assigned lead-time program and may ship in 20 days, less than 20 days, or more than 20 days from order acknowledgement.

Infrastructure

Energy Distribution

Screens

Frame FZ110.

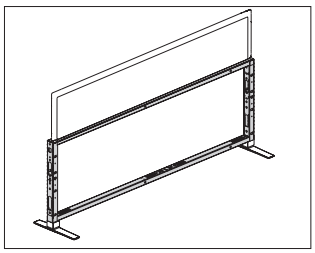

Product Information

Description

This steel frame defines space and channels power and data to the user. Frame holds individual tiles on both sides.

Notes

When finished with cladding, Channel structure is 3″ thick.

With feet added, Channel frame sits 4″ off the floor. Frame can be clad to have an open base or tiles to-the-floor.

24″- and 30″-wide frames cannot support access to power.

Power can enter from bottom opening using an internal direct connect-floor (FZ144.), from a receptacle location using an external direct connect (FZ140.), or from the end of Channel using a ceiling power entry (FZ142.), ordered separately.

Frames of unequal height cannot connect to each other.

Order the following products separately:

- Frame-to-frame connection hardware (FZ128.)
- Structural and nonstructural feet (FZ119., or FZ117.)
- To-the-floor or open base tiles (FZ375., or FZ170.)
- Standard or architectural top cap (FZ112., or FZ11A.)
- Standard or architectural finished end (FZ160., or FZ16A.)
- Power harness (FZ150.)
- Power jumper (FZ154.)

For cable capacity information, see Cable Capacity Charts in Omni.

Dimensions

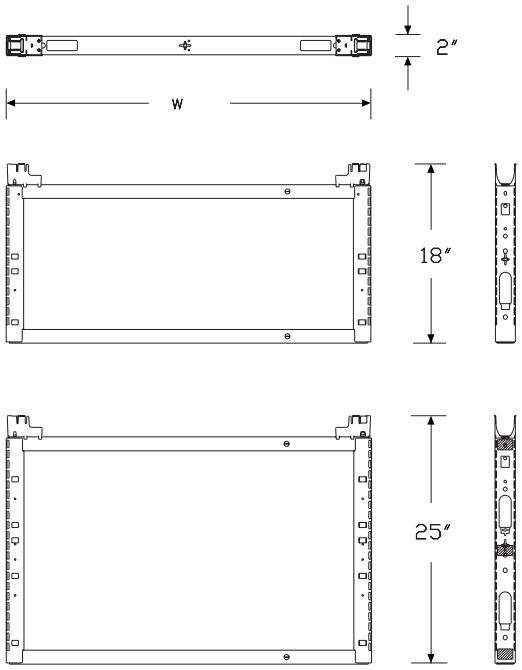

Specification Information

Step 1.

FZ110. A

Step 2. Height

22 22″ high A
29 29″ high A

Step 3. Width

24 24″ wide A
30 30″ wide A
36 36″ wide A
42 42″ wide A
48 48″ wide A
54 54″ wide A
60 60″ wide A
66 66″ wide A
72 72″ wide A

Prices for Steps 1-3.

		24	30	36	42	48	54
FZ110.	**22**	$138	143	148	153	164	180
	29	$141	147	155	161	169	194

		60	66	72
FZ110.	**22**	$191	196	208
	29	$204	210	215

Counterweight FZ19D.

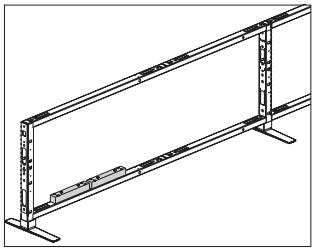

Product Information

Description

This counterweight attaches to the top of the lower frame rail. It is required for specific applications supported by structural feet. 1 counterweight includes 2 weighted blocks and attachment hardware.

Notes

Each counterweight includes 2 pieces.

For applications 5′- to 9′-long with structural feet (FZ119.), specify 2 counterweights.

For applications 9′ 6″- to 12′-long with structural feet (FZ119.), specify 1 counterweight.

For applications longer than 12′ with structural feet (FZ119.), no counterweight is required.

For more application information, see Channel Planning Guide.

Dimensions

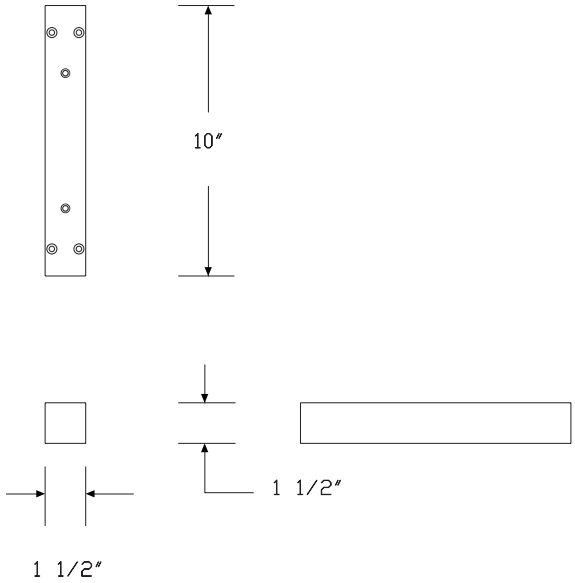

Specification Information

Step 1.

FZ19D.	$194

Gallery Panel, Channel Attached FZ113.

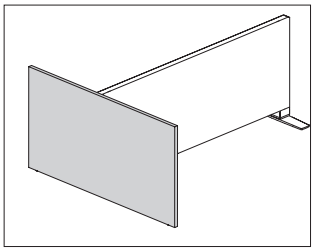

Product Information

Description

This structural panel stands on the floor and attaches to a Channel to provide end-of-run support and privacy. It is 1¼" thick and has a laminate surface with thermoplastic edge, laminate surface with a thermoplastic backed plywood edge, or a veneer surface and edge. Leveling glides and attachment hardware included.

Notes

Gallery panels ranging from 24"-72" wide come as a single piece. Gallery panels ranging from 84"-120" wide come in 3 pieces.

Mid-attached gallery panels are 3" wider than nominal dimension.

Leveling glides provide 2" of leveling adjustment.

Grain direction is vertical on veneer and wood-grain laminate panels.

Attachment direction is determined by facing the gallery panel from outside the workstation. Left attachment (L) connects the left side of a gallery panel to the end of a Channel. Right attachment (R) connects the right side of a gallery panel to the end of a Channel. Mid attachment (M) connects the middle of a gallery panel to the end of a Channel.

Dimensions

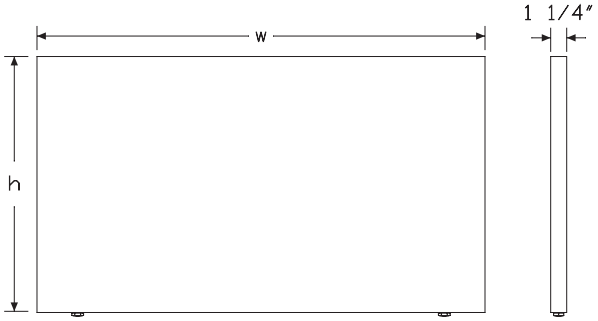

Specification Information

Step 1.

FZ113.

Step 2. Frame Height

22 use with 22"-high frames
29 use with 29"-high frames

Step 3. Gallery Panel Height

For use with 22"-high frames (22)

22 22" high
29 29" high
35 35" high
42 42" high
46 46" high

For use with 29"-high frames (29)

29 29" high
35 35" high
42 42" high
46 46" high

Step 4. Width

For 22" high (22)

24 24" wide
30 30" wide
36 36" wide
42 42" wide
48 48" wide
54 54" wide
60 60" wide
72 72" wide
78 78" wide

Gallery Panel, Channel Attached

continued

For 29" high (29), 35" high (35), 42" high (42), or 46" high (46)

24	24" wide
30	30" wide
36	36" wide
42	42" wide
48	48" wide
54	54" wide
60	60" wide
72	72" wide
78	78" wide
84	84" wide
90	90" wide
96	96" wide
120	120" wide

Step 5. Surface Material

L	laminate
W	veneer
U	laminate top/universal edge

Step 6. Attachment Method

For 24" wide (24), 30" wide (30), 36" wide (36), or 42" wide (42)

L	left attachment
R	right attachment

For 48" wide (48), 54" wide (54), or 60" wide (60)

L	left attachment
M	mid attachment
R	right attachment

For 72" wide (72), 78" wide (78), 84" wide (84), 90" wide (90), 96" wide (96), or 120" wide (120)

M	mid attachment

Prices for Steps 1-6.

			24LL	24LR	24WL	24WR	24UL	24UR
FZ113.	**22**	**22**	$234	234	609	609	234	234
		29	$313	313	688	688	313	313
		35	$421	421	925	925	421	421
		42	$469	469	1030	1030	469	469
		46	$521	521	1145	1145	521	521
	29	**29**	$313	313	688	688	313	313
		35	$421	421	925	925	421	421
		42	$469	469	1030	1030	469	469
		46	$521	521	1145	1145	521	521

			30LL	30LR	30WL	30WR	30UL	30UR
FZ113.	**22**	**22**	$338	338	838	838	338	338
		29	$417	417	916	916	417	417
		35	$526	526	1156	1156	526	526
		42	$573	573	1260	1260	573	573
		46	$625	625	1375	1375	625	625
	29	**29**	$417	417	916	916	417	417
		35	$526	526	1156	1156	526	526
		42	$573	573	1260	1260	573	573
		46	$625	625	1375	1375	625	625

			36LL	36LR	36WL	36WR	36UL	36UR
FZ113.	**22**	**22**	$391	391	952	952	391	391
		29	$469	469	1030	1030	469	469
		35	$579	579	1273	1273	579	579
		42	$625	625	1375	1375	625	625
		46	$677	677	1489	1489	677	677
	29	**29**	$469	469	1030	1030	469	469
		35	$579	579	1273	1273	579	579
		42	$625	625	1375	1375	625	625
		46	$677	677	1489	1489	677	677

			42LL	42LR	42WL	42WR	42UL	42UR
FZ113.	**22**	**22**	$469	469	1124	1124	469	469
		29	$547	547	1203	1203	547	547
		35	$658	658	1446	1446	658	658
		42	$703	703	1545	1545	703	703
		46	$755	755	1660	1660	755	755
	29	**29**	$547	547	1203	1203	547	547
		35	$658	658	1446	1446	658	658
		42	$703	703	1545	1545	703	703
		46	$755	755	1660	1660	755	755

			48LL	48LM	48LR	48WL	48WM	48WR
FZ113.	**22**	**22**	$546	546	546	1295	1283	1295
		29	$625	625	625	1375	1375	1375
		35	$736	736	736	1620	1765	1620
		42	$781	781	781	1718	1718	1718
		46	$833	833	833	1832	1833	1832
	29	**29**	$625	625	625	1375	1375	1375
		35	$736	736	736	1620	1765	1620
		42	$781	781	781	1718	1718	1718
		46	$833	833	833	1832	1833	1832

Gallery Panel, Channel Attached

continued

	48UL	48UM	48UR	54LL	54LM	54LR
FZ113. 22 22	$546	546	546	598	598	598
29	$625	625	625	676	676	676
35	$736	736	736	788	788	788
42	$781	781	781	833	833	833
46	$833	833	833	884	884	884
29 29	$625	625	625	676	676	676
35	$736	736	736	788	788	788
42	$781	781	781	833	833	833
46	$833	833	833	884	884	884

	54WL	54WM	54WR	54UL	54UM	54UR
FZ113. 22 22	$1347	1334	1347	598	598	598
29	$1426	1426	1426	676	676	676
35	$1671	1822	1671	788	788	788
42	$1769	1769	1769	833	833	833
46	$1883	1884	1883	884	884	884
29 29	$1426	1426	1426	676	676	676
35	$1671	1822	1671	788	788	788
42	$1769	1769	1769	833	833	833
46	$1883	1884	1883	884	884	884

	60LL	60LM	60LR	60WL	60WM	60WR
FZ113. 22 22	$650	650	650	1525	1509	1525
29	$729	729	729	1603	1603	1603
35	$841	841	841	1850	2017	1850
42	$885	885	885	1946	1946	1946
46	$937	937	937	2060	2060	2060
29 29	$729	729	729	1603	1603	1603
35	$841	841	841	1850	2017	1850
42	$885	885	885	1946	1946	1946
46	$937	937	937	2060	2060	2060

	60UL	60UM	60UR	72LM	72WM	72UM
FZ113. 22 22	$650	650	650	754	1736	754
29	$729	729	729	833	1832	833
35	$841	841	841	946	2269	946
42	$885	885	885	989	2175	989
46	$937	937	937	1041	2289	1041
29 29	$729	729	729	833	1832	833
35	$841	841	841	946	2269	946
42	$885	885	885	989	2175	989
46	$937	937	937	1041	2289	1041

	78LM	78WM	78UM	84LM	84WM	84UM
FZ113. 22 22	$858	1963	858	—	—	—
29	$937	2058	937	1091	2400	1091
35	$1050	2495	1050	1286	2908	1286
42	$1093	2401	1093	1249	2748	1249
46	$1145	2516	1145	1419	3121	1419
29 29	$936	2038	936	1091	2400	1091
35	$1050	2495	1050	1286	2908	1286
42	$1092	2381	1092	1249	2748	1249
46	$1144	2598	1144	1419	3121	1419

	90LM	90WM	90UM	96LM	96WM	96UM
FZ113. 22 29	$1145	2508	1145	1200	2641	1200
35	$1340	3027	1340	1394	3171	1394
42	$1300	2851	1300	1353	2976	1353
46	$1473	3229	1473	1528	3360	1528
29 29	$1145	2508	1145	1200	2641	1200
35	$1340	3027	1340	1394	3171	1394
42	$1300	2851	1300	1353	2976	1353
46	$1473	3229	1473	1528	3360	1528

	120LM	120WM	120UM
FZ113. 22 29	$1419	3121	1419
35	$1543	3699	1543
42	$1561	3433	1561
46	$1746	3841	1746
29 29	$1419	3121	1419
35	$1543	3699	1543
42	$1561	3433	1561
46	$1746	3841	1746

Step 7. Surface Finish

For 24" wide (24), 30" wide (30), 36" wide (36), 42" wide (42), 48" wide (48), 54" wide (54), 78" wide (78), 84" wide (84), 90" wide (90), 96" wide (96), or 120" wide (120) with laminate (L), or laminate top/ universal edge (U)

1X	vanilla	+$0
28	canyon	+$0
29	misted	+$0
2X	wheat	+$0
38	twilight	+$0
39	desert	+$0
3X	celery	+$0
4X	coriander	+$0
5X	chamomile	+$0
6X	cinnamon	+$0

Gallery Panel, Channel Attached

continued

76	light brown walnut	+$0
7X	cardamom	+$0
8Q	folkstone grey	+$0
8X	kale	+$0
91	white	+$0
98	studio white	+$0
BU	black umber	+$0
CL	cool grey neutral	+$0
HF	inner tone light	+$0
HM	natural maple	+$0
HP	light anigre	+$0
HT	inner tone	+$0
HX	aged cherry	+$0
HY	walnut on cherry	+$0
LA	light ash	+$0
LBA	clear on ash	+$0
LBR	phantom ecru	+$0
LBS	phantom cocoa	+$0
LBU	medium matte walnut	+$0
LBV	warm grey teak	+$0
LBB	oak on ash	+$0
LBC	walnut on ash	+$0
LBD	dark brown walnut	+$0
LBE	medium red walnut	+$0
LBF	neutral twill	+$0
LBG	sarum twill	+$0
LBH	earthen twill	+$0
LBJ	graphite twill	+$0
LBK	pewter mesh	+$0
LBL	steel mesh	+$0
LBM	crisp linen	+$0
LBN	classic linen	+$0
LBP	casual linen	+$0
LBQ	white twill	+$0
LM	mahogany	+$0
LT	light tone	+$0
LU	soft white	+$0
MT	medium tone	+$0
OG	honey maple	+$0
WL	sandstone	+$0
WN	warm grey neutral	+$0
X1	chalk white	+$0

For 60" wide (60) or 72" wide (72) with laminate (L), or laminate top/ universal edge (U)

1X	vanilla	+$0
28	canyon	+$0
29	misted	+$0
2X	wheat	+$0
38	twilight	+$0
39	desert	+$0
3X	celery	+$0
4X	coriander	+$0
5X	chamomile	+$0
6X	cinnamon	+$0
7X	cardamom	+$0
8Q	folkstone grey	+$0
8X	kale	+$0
91	white	+$0
98	studio white	+$0
BU	black umber	+$0
CL	cool grey neutral	+$0
HF	inner tone light	+$0
HT	inner tone	+$0
J4	frosted light grey	+$0
LBK	pewter mesh	+$0
LBL	steel mesh	+$0
LBM	crisp linen	+$0
LBN	classic linen	+$0
LBP	casual linen	+$0
LT	light tone	+$0
LU	soft white	+$0
MT	medium tone	+$0
WL	sandstone	+$0
WN	warm grey neutral	+$0
X1	chalk white	+$0
ZZ	open line laminate (nonstandard)	+$20

Gallery Panel, Channel Attached

continued

For veneer (W)

2U	light brown walnut	+$0
3U	medium red cherry	+$0
40	dark brown walnut	+$0
6U	chocolate brown sapele	+$0
DU	cathedral recut natural maple	+$0
ED	aged cherry	+$0
EK	medium red walnut	+$0
ET	clear on ash	+$0
EU	oak on ash	+$0
EV	walnut on ash	+$0
EW	medium matte walnut	+$0
HU	cathedral recut light anigre	+$0
JU	cathedral recut aged cherry	+$0
UL	natural maple	+$0
UX	walnut on cherry	+$0
VU	cathedral recut light brown walnut	+$0
WU	cathedral recut walnut on cherry	+$0
XU	cathedral recut medium red cherry	+$0
ZU	cathedral recut chocolate brown sapele	+$0

Step 8. Edge Finish

For laminate (L)

76	light brown walnut	+$0
8Q	folkstone grey	+$0
91	white	+$0
98	studio white	+$0
BU	black umber	+$0
CL	cool grey neutral	+$0
HF	inner tone light	+$0
HM	natural maple	+$0
HP	light anigre	+$0
HT	inner tone	+$0
HX	aged cherry	+$0
HY	walnut on cherry	+$0
LA	light ash	+$0
LBA	clear on ash	+$0
LBR	phantom ecru	+$0
LBS	phantom cocoa	+$0
LBU	medium matte walnut	+$0
LBV	warm grey teak	+$0
LBB	oak on ash	+$0
LBC	walnut on ash	+$0
LBD	dark brown walnut	+$0
LBE	medium red walnut	+$0
LBF	neutral twill	+$0
LBG	sarum twill	+$0
LBH	earthen twill	+$0
LBJ	graphite twill	+$0
LBK	pewter mesh	+$0
LBL	steel mesh	+$0
LBM	crisp linen	+$0
LBN	classic linen	+$0
LBP	casual linen	+$0
LBQ	white twill	+$0
LU	soft white	+$0
MT	medium tone	+$0
WL	sandstone	+$0
WN	warm grey neutral	+$0

For laminate top/universal edge (U)

PLY	plywood edge	+$50

Non-Structural Foot FZ117.

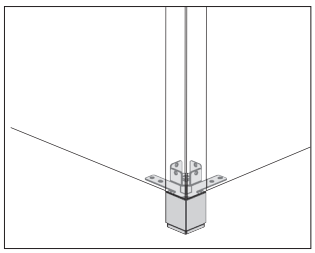

Product Information

Description

This individual foot attaches to 1 end of a frame, at the attachment point of 2 adjacent frames within a run, or multiple frames at a 2-, 3-, or 4-way connection. It adjusts up to 2″ for leveling. Attachment hardware included.

Notes

For use with open base tiles (FZ170.), specify open base (A) option.

For use with to-the-floor tiles (FZ375.), specify to-the-floor tile (B) option.

For use with 120° connections, specify end of frame (1A) option.

For length of run and proper support information, see planning guide.

Dimensions

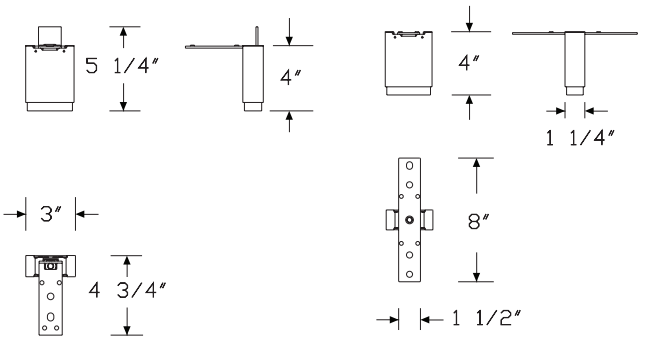

End of frame (1A)

Shared, frame to frame (1B)

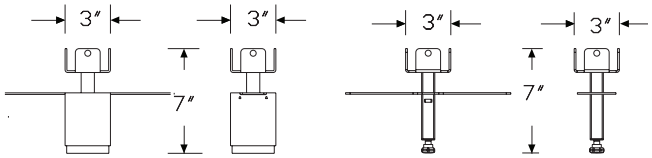

Open base foot (A)

To the floor tile foot (B)

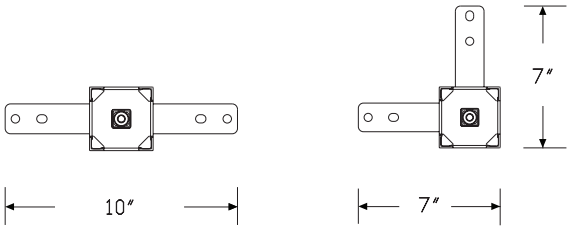

2-Way, 180 degree (2A)

2-Way, 90 degree (2C)

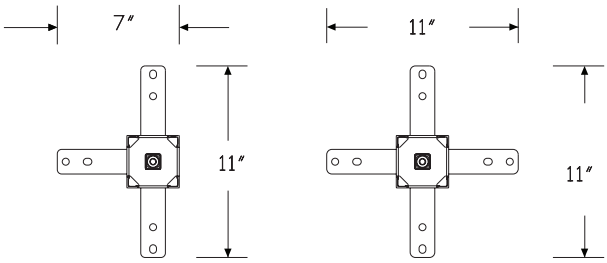

3-Way, 90 degree (3C)

4-Way, 90 degree (4C)

Specification Information

Step 1.

FZ117.

Step 2. Base Option

A	open base
B	to-the-floor tile

Step 3. Configuration

1A	end-of-frame
1B	shared, frame-to-frame connection
2C	2-way 90° connection
2A	2-way 180° connection
3C	3-way 90° connection
4C	4-way 90° connection

Prices for Steps 1-3.

		1A	1B	2C	2A	3C	4C
FZ117.	**A**	$124	130	246	246	251	258
	B	$63	66	123	123	126	129

Step 4. Surface Finish

For open base (A)

Metallic Paint

CN	metallic champagne	+$0
EH	metallic bronze	+$0
MS	metallic silver	+$0

Sand Texture Paint

8Q	folkstone grey	+$0
91	white	+$0
98	studio white	+$0
BK	black	+$0
CL	cool grey neutral	+$0
G1	graphite	+$0
WL	sandstone	+$0
WN	warm grey neutral	+$0

Structural Foot FZ119.

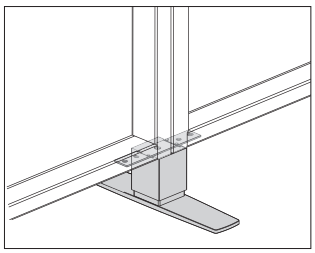

Product Information

Description

This individual structural foot supports 1 end of a frame or the attachment point of 2 adjacent frames, and can support a Channel wall run. It adjusts up to 2″ for leveling. Attachment hardware included.

Notes

For use with open base tiles (FZ170.). specify open base (A) option.

For use with to-the-floor tiles (FZ375.), specify to-the-floor tile (B) option.

Structural foot can be located at the end of a run (1), 6″ from the end (2), or be shared in a frame-to-frame connection (3).

For length of run and proper support information, see planning guide.

Dimensions

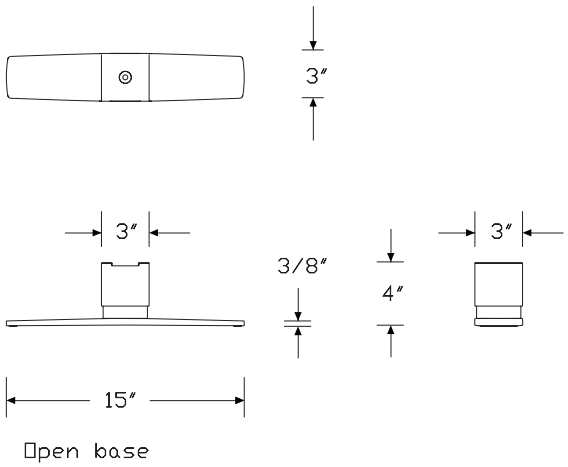

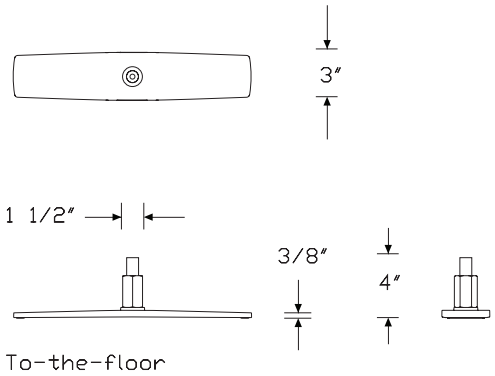

Specification Information

Step 1.

FZ119.

Step 2. Base Option

A	open base
B	to-the-floor tile

Step 3. Foot Location

1	end-of-frame
2	6" from end
3	shared, frame-to-frame connection

Prices for Steps 1-3.

		1	2	3
FZ119.	**A**	$255	255	255
	B	$219	219	219

Step 4. Surface Finish

Sand Texture Paint

8Q	folkstone grey	+$0
91	white	+$0
98	studio white	+$0
BK	black	+$0
CL	cool grey neutral	+$0
G1	graphite	+$0
WL	sandstone	+$0
WN	warm grey neutral	+$0

Metallic Paint

CN	metallic champagne	+$0
EH	metallic bronze	+$0
MS	metallic silver	+$0

Frame-to-Frame Connection Hardware FZ128.

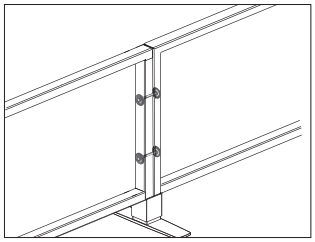

Product Information

Description

This hardware connects 2 frames of equal height in a straight line. Light seal included; finish is black.

Notes

When used with open base tiles (FZ170.), specify open base (A) option. When used with to-the-floor tiles (FZ375.), specify to-the-floor (B) option.

Dimensions

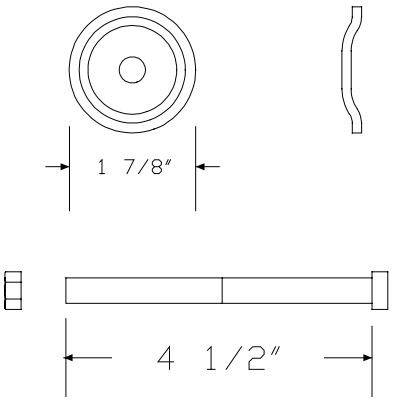

Specification Information

Step 1.

FZ128. A

Step 2. Frame Height

22 use with 22″-high frames A

29 use with 29″-high frames A

Step 3. Base Option

A open base A

B to-the-floor A

Prices for Steps 1-3.

		A	B
FZ128.	**22**	$24	24
	29	$24	24

90° Universal Connector FZ121.

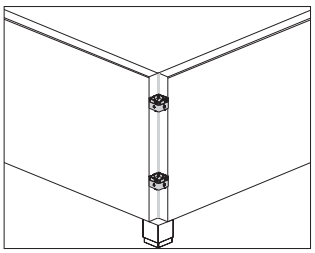

Product Information

Description

This connector joins 2, 3, or 4 frames of equal height at 90° angles. Attachment hardware and light seal included. Light seal finish is black.

Notes

Order the following products separately:

- 90° connector cover (FZ123.)
- 90° connector cover, architectural (FZ12B.)
- 90° connector top cap (FZ126.)
- 90° connector top cap, architectural (FZ12A.)

When used with open base tiles (FZ170.), specify open base (A) option.

When used with to-the-floor tiles (FZ375.), specify to-the-floor (B) option.

Dimensions

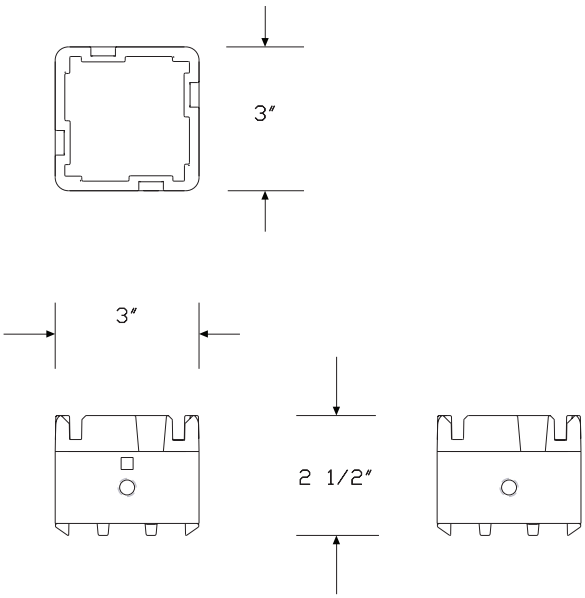

Specification Information

Step 1.

FZ121. A

Step 2. Configuration

2	2 way, 90° or 180° A
3	3 way A
4	4 way A

Step 3. Frame Height

22	use with 22″-high frames A
29	use with 29″-high frames A

Step 4. Base Option

A	open base A
B	to-the-floor A

Prices for Steps 1-4.

			A	B
FZ121.	**2**	**22**	$60	60
		29	$62	62
	3	**22**	$71	71
		29	$73	73
	4	**22**	$83	83
		29	$85	85

120° Universal Connector FZ131.

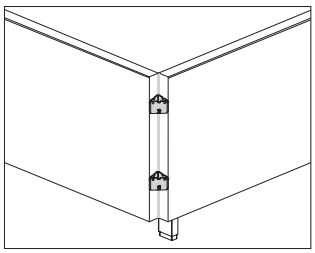

Product Information

Description

This connector joins 2 or 3 frames of equal height at 120° angles. Attachment hardware and light seal included. Light seal finish is black.

Notes

Order the following products separately:

- 120° connector cover (FZ133.)
- 120° connector top cap (FZ136.)

When used with open base tiles (FZ170.), specify open base (A) option.

When used with to-the-floor tiles (FZ375.), specify to-the-floor (B) option.

Dimensions

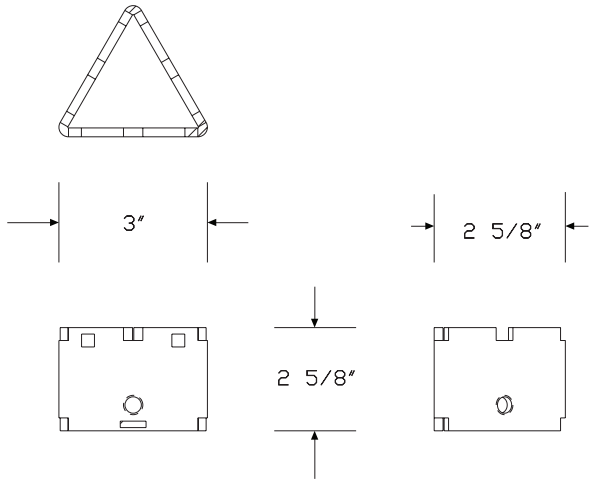

Specification Information

Step 1.

FZ131. A

Step 2. Configuration

2 2 way A

3 3 way A

Step 3. Frame Height

22 use with 22″-high frames A

29 use with 29″-high frames A

Step 4. Base Option

A open base A

B to-the-floor A

Prices for Steps 1-4.

			A	B
FZ131.	**2**	**22**	$94	94
		29	$98	98
	3	**22**	$105	105
		29	$110	110

90° Connector Cover FZ123.

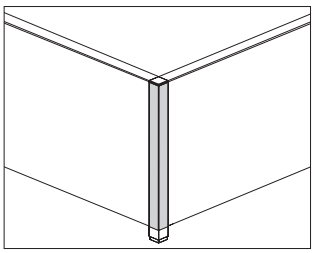

Product Information

Description

This connector cover attaches to a 90° universal connector and has a painted surface. Attachment hardware included.

Notes

Specify connector cover height to match frame height.

Specify 1 side covered (1) or 2 sides covered (2) configuration to match the number of exposed connector sides.

Order 90° connector top cap (FZ126.) separately.

Dimensions

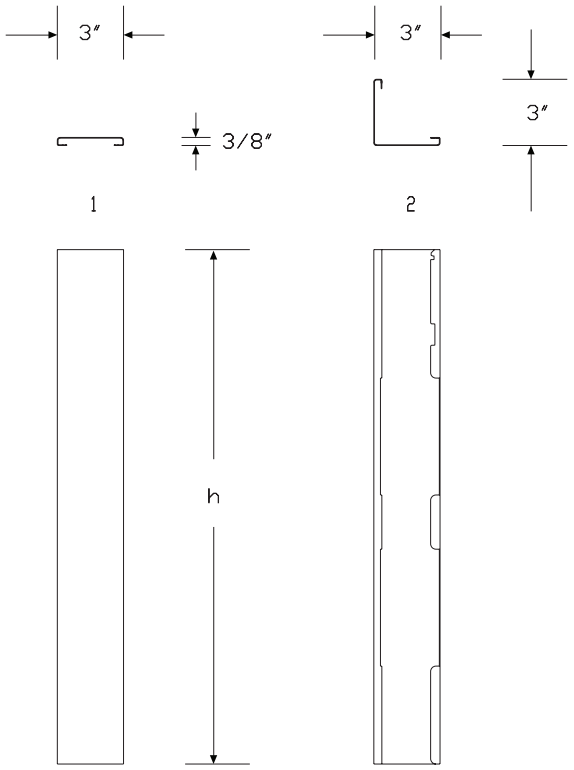

Specification Information

Step 1.

FZ123. A

Step 2. Configuration

1	1 side covered A
2	2 sides covered A

Step 3. Height

22	22″ high A
29	29″ high A

Step 4. Base Option

A	open base A
B	to-the-floor A

Step 5. Surface Material

P	painted A

Prices for Steps 1-5.

			AP	BP
FZ123.	**1**	**22**	$47	49
		29	$48	50
	2	**22**	$55	57
		29	$56	58

Step 6. Surface Finish

Sand Texture Paint

8Q	folkstone grey A	+$0
91	white A	+$0
98	studio white A	+$0
BK	black A	+$0
CL	cool grey neutral A	+$0
G1	graphite A	+$0
WL	sandstone A	+$0
WN	warm grey neutral A	+$0

Metallic Paint

CN	metallic champagne A	+$0
EH	metallic bronze A	+$0
MS	metallic silver A	+$0

90° Connector Cover, Architectural

FZ12B.

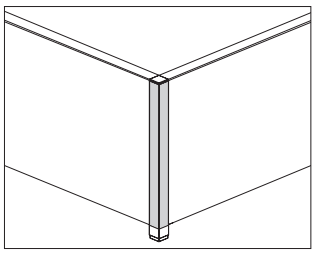

Product Information

Description

This connector cover attaches to a 90° universal connector and has a painted surface. Attachment hardware included.

Notes

Specify connector cover height to match frame height.

Specify 1 side covered (1) or 2 sides covered (2) configuration to match the number of exposed connector sides.

Order 90° connector top cap, architectural (FZ12A.) separately.

Dimensions

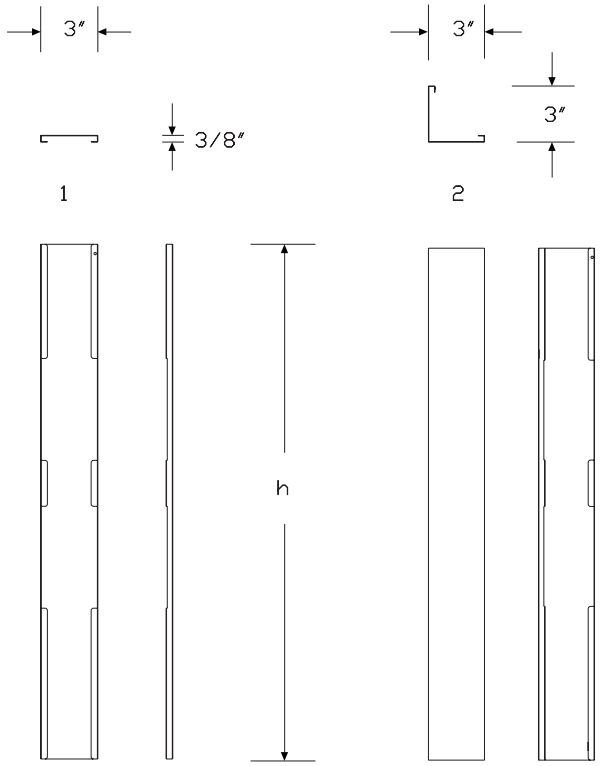

Specification Information

Step 1.

FZ12B. A

Step 2. Configuration

1	1 side covered A
2	2 sides covered A

Step 3. Height

22	22″ high A
29	29″ high A

Step 4. Base Option

A	open base A
B	to-the-floor A

Step 5. Surface Material

P	painted A

Prices for Steps 1-5.

			AP	BP
FZ12B.	**1**	**22**	$64	67
		29	$70	73
	2	**22**	$80	83
		29	$84	87

Step 6. Surface Finish

Sand Texture Paint

8Q	folkstone grey A	+$0
91	white A	+$0
98	studio white A	+$0
BK	black A	+$0
CL	cool grey neutral A	+$0
G1	graphite A	+$0
WL	sandstone A	+$0
WN	warm grey neutral A	+$0

Metallic Paint

CN	metallic champagne A	+$0
EH	metallic bronze A	+$0
MS	metallic silver A	+$0

120° Connector Cover FZ133.

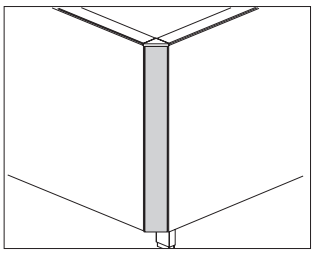

Product Information

Description

This connector cover attaches to a 120° connector and has a painted surface. Attachment hardware included.

Notes

Specify connector cover height to match frame height.

Dimensions

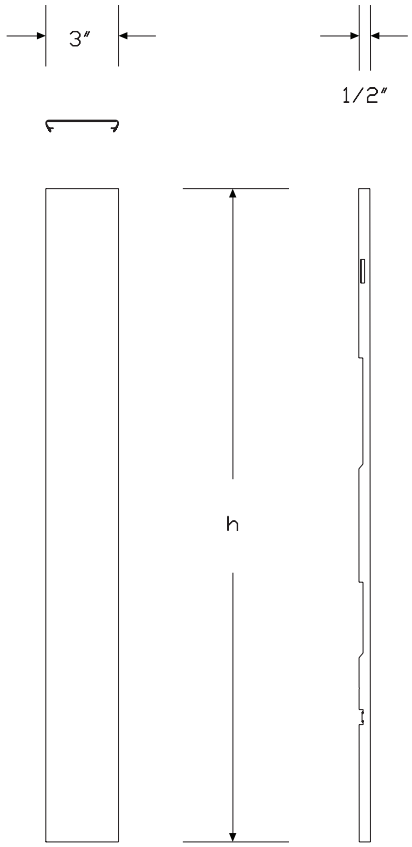

Specification Information

Step 1.

FZ133. A

Step 2. Configuration

1	1 side covered A

Step 3. Height

22	22″ high A
29	29″ high A

Step 4. Base Option

A	open base A
B	to-the-floor A

Step 5. Surface Material

P	painted A

Prices for Steps 1-5.

			AP	BP
FZ133.	**1**	**22**	$76	79
		29	$79	82

Step 6. Surface Finish

Sand Texture Paint

8Q	folkstone grey A	+$0
91	white A	+$0
98	studio white A	+$0
BK	black A	+$0
CL	cool grey neutral A	+$0
G1	graphite A	+$0
WL	sandstone A	+$0
WN	warm grey neutral A	+$0

Metallic Paint

CN	metallic champagne A	+$0
EH	metallic bronze A	+$0
MS	metallic silver A	+$0

Finished End FZ160.

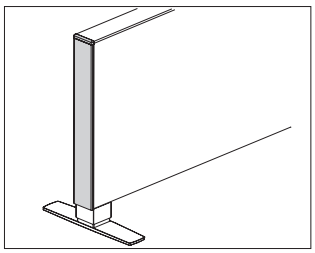

Product Information

Description

This cover finishes the exposed end of a single frame. It has a painted surface and a black light seal. Attachment hardware included.

Notes

Specify finished end height to match frame height.

For use with open base tiles (FZ170.), specify finished end open base (A) option; for use with to-the-floor tiles (FZ375.), specify finished end to-the-floor (B) option.

Order frame top cap (FZ112.) separately.

Dimensions

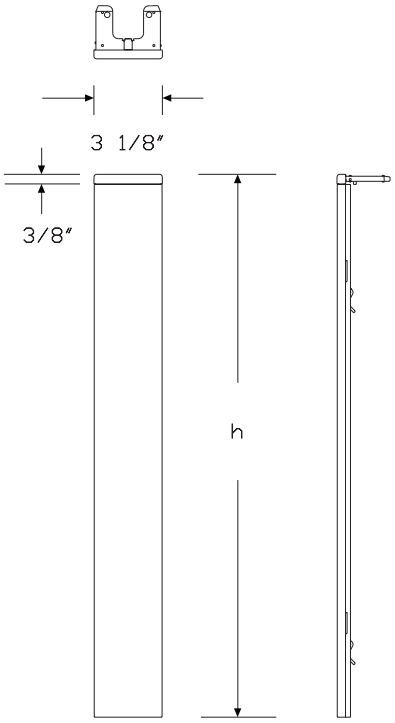

Specification Information

Step 1.

FZ160. A

Step 2. Height

22	22" high A
29	29" high A

Step 3. Base Option

A	open base A
B	to-the-floor A

Step 4. Surface Material

P	painted A

Prices for Steps 1-4.

			P
FZ160.	**22**	**A**	$44
		B	$49
	29	**A**	$47
		B	$53

Step 5. Surface Finish

8Q	folkstone grey A	+$0
91	white A	+$0
98	studio white A	+$0
BK	black A	+$0
CL	cool grey neutral A	+$0
G1	graphite A	+$0
WL	sandstone A	+$0
WN	warm grey neutral A	+$0
CN	metallic champagne A	+$0
EH	metallic bronze A	+$0
MS	metallic silver A	+$0

Finished End, Architectural FZ16A.

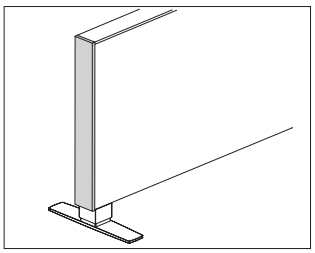

Product Information

Description

This cover finishes the exposed end of a single frame. It has a painted surface and a black light seal. Attachment hardware included.

Notes

Specify finished end height to match frame height.

For use with open base tiles (FZ170.), specify finished end open base (A) option; for use with to-the-floor tiles (FZ375.), specify finished end to-the-floor (B) option.

Order frame top cap, architectural (FZ11A.) separately.

Dimensions

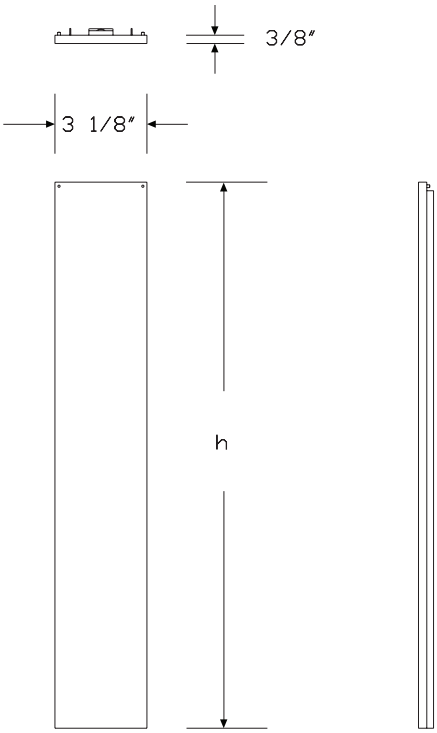

Specification Information

Step 1.

FZ16A. A

Step 2. Height

22	22″ high A
29	29″ high A

Step 3. Base Option

A	open base A
B	to-the-floor A

Step 4. Surface Material

P	painted A

Prices for Steps 1-4.

			P
FZ16A.	**22**	**A**	$184
		B	$193
	29	**A**	$193
		B	$202

Step 5. Surface Finish

Sand Texture Paint

8Q	folkstone grey A	+$0
91	white A	+$0
98	studio white A	+$0
BK	black A	+$0
CL	cool grey neutral A	+$0
G1	graphite A	+$0
CN	metallic champagne A	+$0
EH	metallic bronze A	+$0
MS	metallic silver A	+$0

Top Cap FZ112.

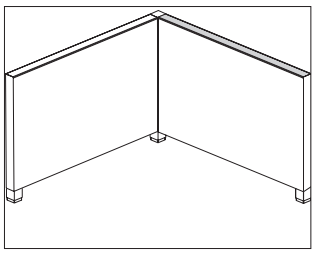

Product Information

Description

This top cap trims the top of an individual frame or frames and has a painted surface. Attachment hardware included.

Notes

Tiles (FZ170. or FZ375.) must be specified on both sides of frame for top cap to attach.

Top cap covers 1 or 2 frames.

Frame top cap is not required for frame with frame top screen.

Dimensions

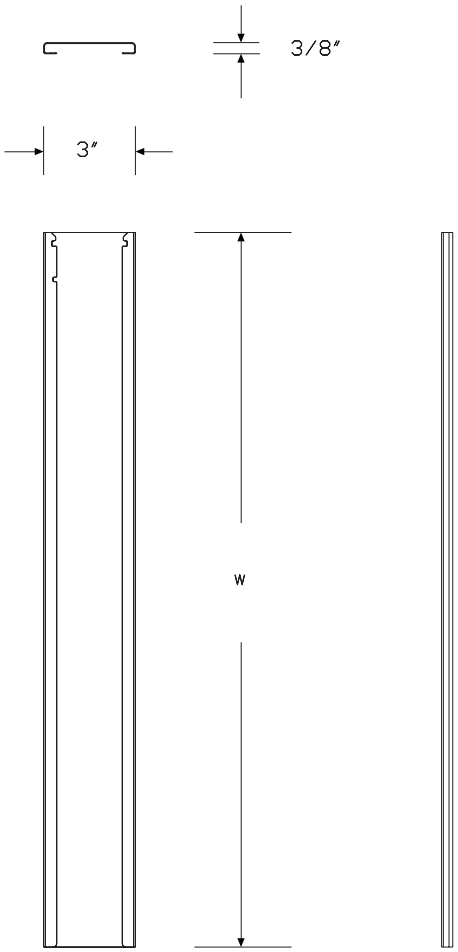

Specification Information

Step 1.

FZ112. A

Step 2. Width

24	24″ wide A
30	30″ wide A
36	36″ wide A
42	42″ wide A
48	48″ wide A
54	54″ wide A
60	60″ wide A
66	66″ wide A
72	72″ wide A
78	78″ wide A
84	84″ wide A
90	90″ wide A
96	96″ wide A

Step 3. Surface Material

P	painted A

Prices for Steps 1-3.

		P
FZ112.	**24**	$30
	30	$33
	36	$37
	42	$41
	48	$44
	54	$50
	60	$55
	66	$58
	72	$62
	78	$66
	84	$69
	90	$82
	96	$86

Step 4. Surface Finish

Sand Texture Paint

8Q	folkstone grey A	+$0
91	white A	+$0
98	studio white A	+$0
BK	black A	+$0
CL	cool grey neutral A	+$0
G1	graphite A	+$0
WL	sandstone A	+$0
WN	warm grey neutral A	+$0

Metallic Paint

CN	metallic champagne A	+$0
EH	metallic bronze A	+$0
MS	metallic silver A	+$0

Top Cap, Architectural FZ11A.

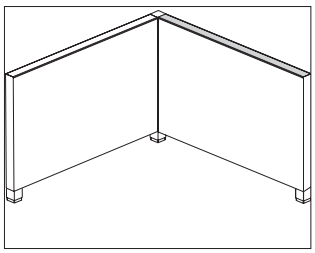

Product Information

Description

This top cap trims the top of an individual frame or spans 2 frames within a run. Attachment hardware included.

Notes

Tiles (FZ110. or FZ375.) must be specified on both sides of frame for top cap to attach.

Top cap covers 1 or 2 frames.

Frame top cap is not required for frame with frame top screen.

Dimensions

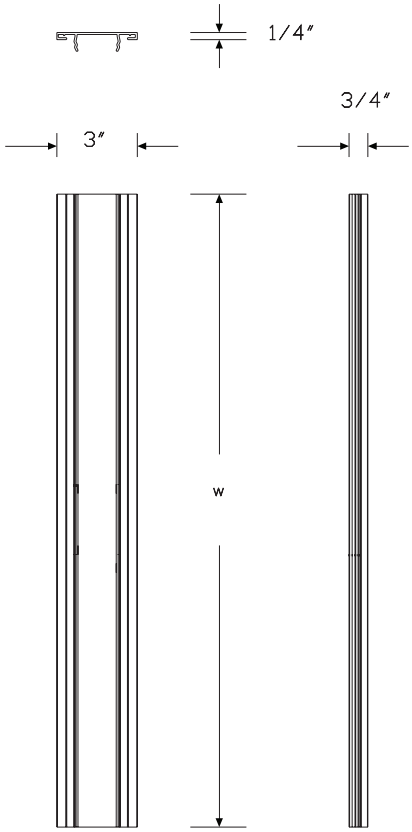

Specification Information

Step 1.

FZ11A. A

Step 2. Width

24	24″ wide	A
30	30″ wide	A
36	36″ wide	A
42	42″ wide	A
48	48″ wide	A
54	54″ wide	A
60	60″ wide	A
66	66″ wide	A
72	72″ wide	A
78	78″ wide	A
84	84″ wide	A
90	90″ wide	A
96	96″ wide	A

Step 3. Surface Material

P	painted	A

Prices for Steps 1-3.

		P
FZ11A.	**24**	$68
	30	$78
	36	$87
	42	$96
	48	$108
	54	$115
	60	$127
	66	$136
	72	$146
	78	$158
	84	$167
	90	$191
	96	$203

Step 4. Surface Finish

Sand Texture Paint		
8Q	folkstone grey A	+$0
91	white A	+$0
98	studio white A	+$0
BK	black A	+$0
CL	cool grey neutral A	+$0
G1	graphite A	+$0
WL	sandstone A	+$0
WN	warm grey neutral A	+$0
CN	metallic champagne A	+$0
EH	metallic bronze A	+$0
MS	metallic silver A	+$0

90° Connector Top Cap FZ126.

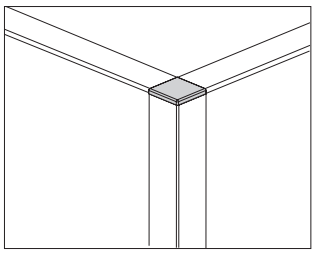

Product Information

Description

This cap trims the top of a connector and has a painted surface. Attachment hardware included.

Notes

Specify top cap to connect into total number of adjacent equal-height frame top caps.

Order the following products separately:

- 90° connector cover (FZ123.)
- Frame top cap (FZ112.)

Dimensions

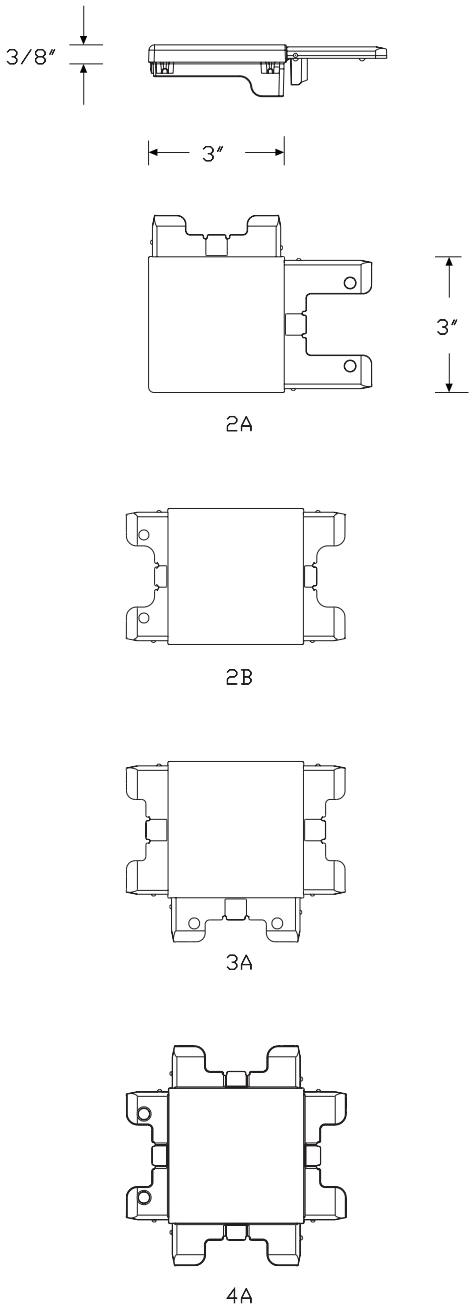

Specification Information

Step 1.

FZ126. A

Step 2. Configuration

2A	for 2 frame top caps, 90° A
2B	for 2 frame top caps, 180° A
3A	for 3 frame top caps A
4A	for 4 frame top caps A

Step 3. Surface Material

P	painted A

Prices for Steps 1-3.

		P
FZ126.	**2A**	$30
	2B	$30
	3A	$30
	4A	$30

Step 4. Surface Finish

Sand Texture Paint

8Q	folkstone grey A	+$0
91	white A	+$0
98	studio white A	+$0
BK	black A	+$0
CL	cool grey neutral A	+$0
G1	graphite A	+$0
WL	sandstone A	+$0
WN	warm grey neutral A	+$0
CN	metallic champagne A	+$0
EH	metallic bronze A	+$0
MS	metallic silver A	+$0

90° Connector Top Cap, Architectural FZ12A.

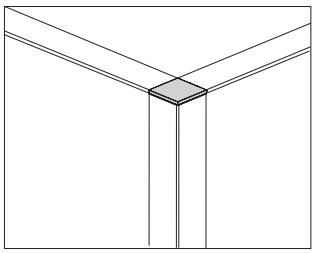

Product Information

Description

This cap trims the top of an architectural connector and has a painted surface. Attachment hardware included.

Notes

Specify top cap to connect into total number of adjacent equal-height architectural frame top caps.

Order the following products separately:

- 90° connector cover, architectural (FZ12B.)
- Frame top cap, architectural (FZ11A.)

Dimensions

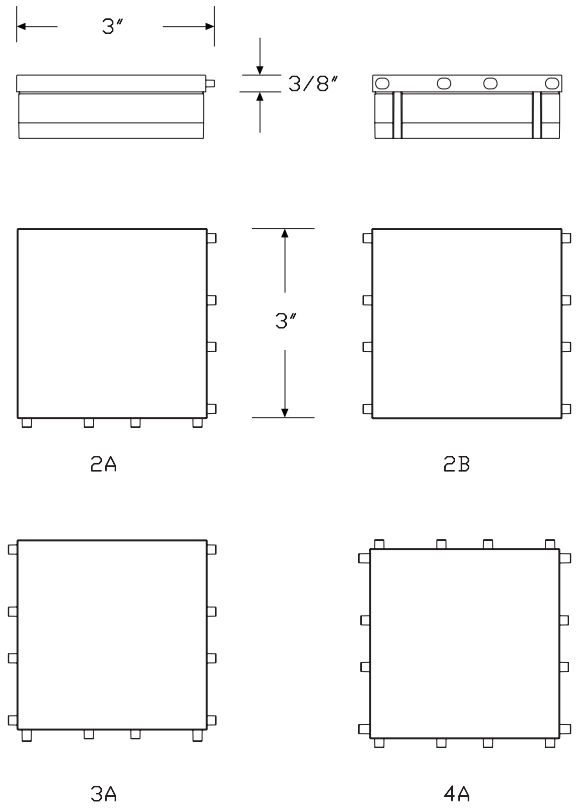

Specification Information

Step 1.

FZ12A. A

Step 2. Configuration

2A	for 2 frame top caps, 90° A
2B	for 2 frame top caps, 180° A
3A	for 3 frame top caps A
4A	for 4 frame top caps A

Step 3. Surface Material

P	painted A

Prices for Steps 1-3.

		P
FZ12A.	**2A**	$25
	2B	$25
	3A	$25
	4A	$25

Step 4. Surface Finish

Sand Texture Paint

8Q	folkstone grey A	+$0
91	white A	+$0
98	studio white A	+$0
BK	black A	+$0
CL	cool grey neutral A	+$0
G1	graphite A	+$0
WL	sandstone A	+$0
WN	warm grey neutral A	+$0

Metallic Paint

CN	metallic champagne A	+$0
EH	metallic bronze A	+$0
MS	metallic silver A	+$0

120° Connector Top Cap FZ136.

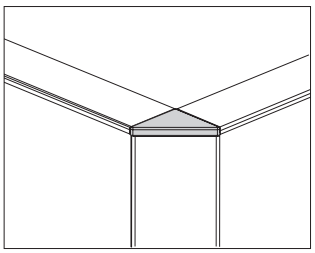

Product Information

Description

This cap trims the top of a 120° connector and has a painted surface. Attachment hardware included.

Notes

Specify top cap to connect into total number of adjacent equal-height frame top caps.

Order the following products separately:

- 120° connector cover (FZ133.)
- Frame top cap (FZ112.)

Dimensions

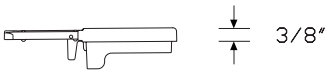

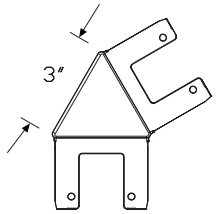

2

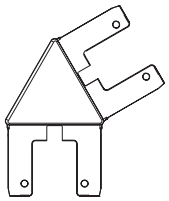

2A

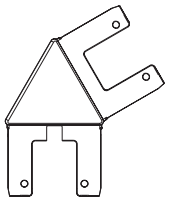

2B

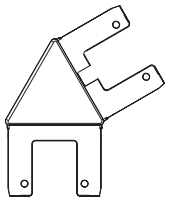

2C

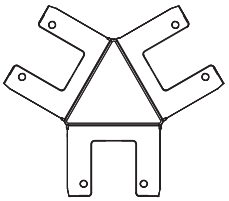

3

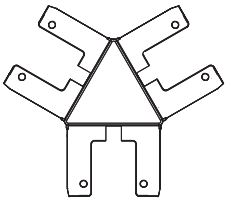

3A

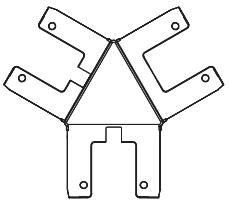

3B

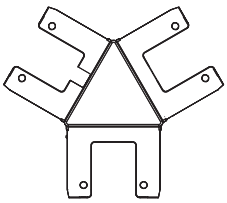

3C

Specification Information

Step 1.

FZ136. A

Step 2. Configuration

2	connects into 2 frame top caps A
2A	connects into 2 frame top screens A
2B	connects into frame top screen left, frame top cap right A
2C	connects into frame top cap left and frame top screen right A
3	connects into 3 frame top caps A
3A	connects into 3 frame top screens A
3B	connects into frame top screen 2 sides, frame top cap 1 side A
3C	connects into frame top screen 1 side, frame top cap 2 sides A

Step 3. Surface Material

P	painted A

Prices for Steps 1-3.

		P
FZ136.	**2**	$34
	2A	$58
	2B	$58
	2C	$58
	3	$34
	3A	$58
	3B	$58
	3C	$58

Step 4. Surface Finish

Sand Texture Paint

8Q	folkstone grey A	+$0
91	white A	+$0
98	studio white A	+$0
BK	black A	+$0
CL	cool grey neutral A	+$0
G1	graphite A	+$0
WL	sandstone A	+$0
WN	warm grey neutral A	+$0

Metallic Paint

CN	metallic champagne A	+$0
EH	metallic bronze A	+$0
MS	metallic silver A	+$0

Open Base Tile FZ170.

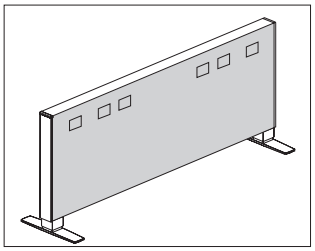

Product Information

Description

This tile attaches to 1 side of a frame and has a painted metal or tackable fabric surface. It is available with or without power and data access at the top power location. Tile is UL listed and NFPA classified. Attachment hardware included.

Notes

Specify width of tile to match width of frame (FZ110.).

To access power and data, order power harness (FZ152.) separately.

For tackable fabric tile with cutouts for hardwired junction boxes (meets Chicago electrical code requirements), specify (O), (P), or (Q) cutout location options.

Painted metal tile with cutouts for hardwired junction boxes already meets Chicago electrical code requirements.

Tiles 24" wide and 30" wide do not support power and data access.

Tiles 36"-54" wide support power and data access at left-hand top and right-hand top of tile only.

Tiles 78" wide cover joined 48"- and 30"-wide frame pairs; power and data access is on 48"-wide frame side only.

Tiles 84" wide cover 2 42"-wide frames.

Tiles 96" wide cover 2 48"-wide frames.

When specifying tackable fabric, horizontal (R) option, fabric direction is horizontal (railroaded). Specify all tiles within the workstation to be the same fabric direction.

Fabric-covered tile accepts Customer's Own Material (COM). Yardage is estimated for directional, 54"-wide fabrics.

Height—Yardage
22"—0.60
29"—0.80

For tackable fabric, horizontal option (R):

Width—Yardage
24"—0.80
30"—1.00
36"—1.10
42"—1.30
48"—1.50
54"—1.60
60"—1.80
66"—2.00
72"—2.10
78"—2.30
84"—2.50
96"—2.80

For information on multiple quantities or directional fabrics, contact COM Department. See Order Information in appendices.

Dimensions

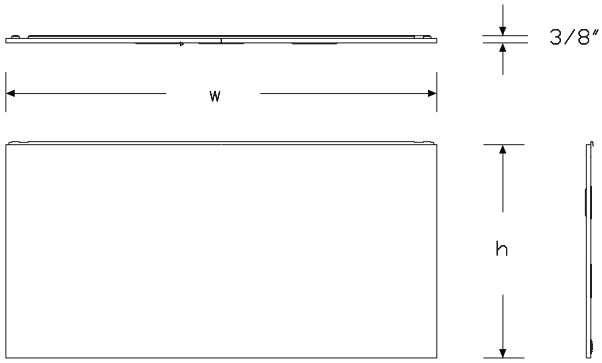

For 36",42",48",54" and 78" wide tiles

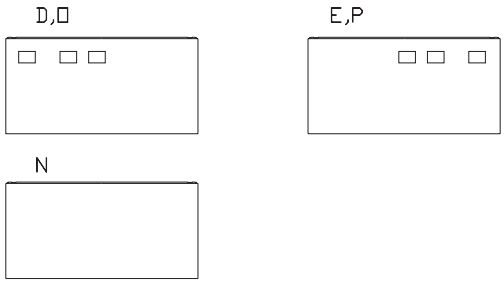

For 60",66",72",84" and 96" wide tiles

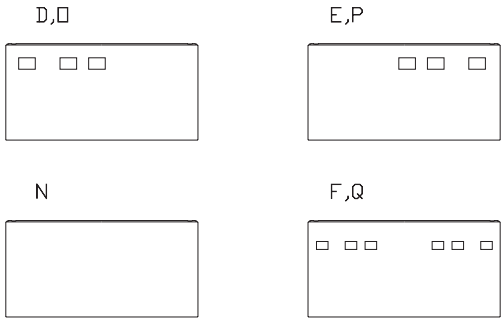

Specification Information

Step 1.

FZ170. A

Step 2. Surface Material

T fabric A
R fabric, horizontal A
P painted A

Step 3. Height

22 22" high A
29 29" high A

Step 4. Width

For fabric (T)

24 24" wide A
30 30" wide A
36 36" wide A
42 42" wide A
48 48" wide A

For fabric, horizontal (R)

24 24" wide A
30 30" wide A
36 36" wide A
42 42" wide A
48 48" wide A
54 54" wide A
60 60" wide A
66 66" wide A
72 72" wide A
78 78" wide A
84 84" wide A
96 96" wide A

For painted (P)

24 24" wide A
30 30" wide A
36 36" wide A
42 42" wide A
48 48" wide A
54 54" wide A
60 60" wide A
66 66" wide A
72 72" wide A

Step 5. Cutout Location

For fabric (T), fabric, horizontal (R), or painted (P) with 24" wide (24) or 30" wide (30)

N no cutout A

For fabric (T) or fabric, horizontal (R) with 36" wide (36), 42" wide (42), 48" wide (48), 54" wide (54), or 78" wide (78)

N no cutout A
D power/data cutouts at LH top of cladding A
E power/data cutouts at RH top of cladding A
O power/data cutouts at LH top of cladding (meets Chicago electrical code requirements) A
P power/data cutouts at RH top of cladding (meets Chicago electrical code requirements) A

For fabric, horizontal (R) with 60" wide (60), 66" wide (66), 72" wide (72), 84" wide (84), or 96" wide (96)

N no cutout A
D power/data cutouts at LH top of cladding A
E power/data cutouts at RH top of cladding A
F power/data cutouts in the LH and RH top of cladding A
O power/data cutouts at LH top of cladding (meets Chicago electrical code requirements) A
P power/data cutouts at RH top of cladding (meets Chicago electrical code requirements) A
Q power/data cutouts in the LH and RH top of cladding (meets Chicago electrical code requirements) A

For painted (P) with 36" wide (36), 42" wide (42), 48" wide (48), or 54" wide (54)

N no cutout A
D power/data cutouts at LH top of cladding A
E power/data cutouts at RH top of cladding A

For painted (P) with 60" wide (60), 66" wide (66), or 72" wide (72)

N no cutout A
D power/data cutouts at LH top of cladding A
E power/data cutouts at RH top of cladding A
F power/data cutouts in the LH and RH top of cladding A

Prices for Steps 1-5.

			24N	30N	36N	36D	36E	36O
FZ170.	**T**	**22**	$142	152	164	204	204	204
		29	$145	156	167	204	208	208
	R	**22**	$142	152	164	204	204	204
		29	$145	156	167	208	208	208

P	22	$199	213	229	286	286	—
	29	$203	217	234	291	291	—

		36P	42N	42D	42E	42O	42P
FZ170. T	22	$204	160	200	200	200	200
	29	$208	163	200	203	203	203
R	22	$204	160	200	200	200	200
	29	$208	163	203	203	203	203
P	22	—	$223	280	280	—	—
	29	—	$228	285	285	—	—

		48N	48D	48E	48O	48P	54N
FZ170. T	22	$170	211	211	211	211	—
	29	$173	211	214	214	214	—
R	22	$170	211	211	211	211	254
	29	$173	214	214	214	214	260
P	22	$237	294	294	—	—	355
	29	$242	299	299	—	—	364

		54D	54E	54O	54P	60N	60D
FZ170. R	22	$295	295	295	295	273	314
	29	$300	300	300	300	278	319
P	22	$413	413	—	—	381	438
	29	$421	421	—	—	389	446

		60E	60F	60O	60P	60Q	66N
FZ170. R	22	$314	324	314	314	324	283
	29	$319	329	319	319	329	289
P	22	$438	452	—	—	—	396
	29	$446	461	—	—	—	404

		66D	66E	66F	66O	66P	66Q
FZ170. R	22	$324	324	334	324	324	334
	29	$330	330	340	330	330	340
P	22	$453	453	468	—	—	—
	29	$462	462	476	—	—	—

		72N	72D	72E	72F	72O	72P
FZ170. R	22	$294	335	335	345	335	335
	29	$300	341	341	351	341	341
P	22	$412	469	469	483	—	—
	29	$421	478	478	492	—	—

		72Q	78N	78D	78E	78O	78P
FZ170. R	22	$345	302	343	343	343	343
	29	$351	309	349	349	349	349

		84N	84D	84E	84F	84O	84P
FZ170. R	22	$312	352	352	363	352	352
	29	$318	359	359	369	359	359

		84Q	96N	96D	96E	96F	96O
FZ170. R	22	$363	331	372	372	382	372
	29	$369	338	379	379	389	379

		96P	96Q
FZ170. R	22	$372	382
	29	$379	389

Step 6. Surface Finish

For painted (P)

8Q	folkstone grey A	+$0
91	white A	+$0
98	studio white A	+$0
BK	black A	+$0
CL	cool grey neutral A	+$0
G1	graphite A	+$0
WL	sandstone A	+$0
WN	warm grey neutral A	+$0

For painted (P)

CN	metallic champagne A	+$0
EH	metallic bronze A	+$0
MS	metallic silver A	+$0

For fabric (T) AND fabric, horizontal (R)

	22	29
Price Category 1	+$0	0
Price Category 2	+$13	19
Price Category 3	+$21	33
Price Category 4	+$33	51
Price Category 5	+$69	103
Price Category B	+$35	52
Price Category C	+$52	79
Price Category D	+$69	103
Price Category E	+$84	128
Price Category F	+$122	174
Price Category G	+$158	226

Step 7. Receptacle Trim Finish		
For power/data cutouts at LH top of cladding (D), power/data cutouts at RH top of cladding (E), power/data cutouts in the LH and RH top of cladding (F), power/data cutouts at LH top of cladding (meets Chicago electrical code requirements) (O), power/data cutouts at RH top of cladding (meets Chicago electrical code requirements) (P), or power/data cutouts in the LH and RH top of cladding (meets Chicago electrical code requirements) (Q)		
8Q	folkstone grey A	+$0
91	white A	+$0
98	studio white A	+$0
BK	black A	+$0
CL	cool grey neutral A	+$0
G1	graphite A	+$0
WL	sandstone A	+$0
WN	warm grey neutral A	+$0

To-The-Floor Tiles FZ375.

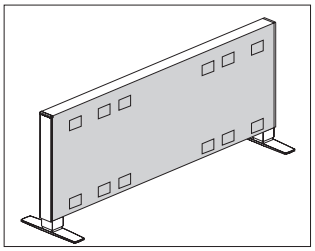

Product Information

Description

This tile attaches to 1 side of a frame and has a painted metal or tackable fabric surface. It is available with or without power and data access at the top and/or bottom power locations. Tile is UL listed and NFPA classified. Attachment hardware included.

Notes

Specify width of tile to match width of frame (FZ110.).

To access power and data, order power harness (FZ152.) separately.

For tackable fabric tile with cutouts for hardwired junction boxes (meets Chicago electrical code requirements), specify (O), (P), (Q), (S), (T), (U), (V), (W), or (X) cutout location options.

Painted metal tile with cutouts for hardwired junction boxes already meets Chicago electrical code requirements.

Tiles 24″ wide and 30″ wide do not support power and data access.

Tiles 36″-54″ wide support power and data access at left-hand top and right-hand top of tile only.

Tiles 78″ wide cover joined 48″- and 30″-wide frame pairs; power and data access is on 48″-wide frame side only.

Tiles 84″ wide cover 2 42″-wide frames.

Tiles 96″ wide cover 2 48″-wide frames.

When specifying tackable fabric, horizontal (R) option, fabric direction is horizontal (railroaded). Specify all tiles within the workstation to be the same fabric direction.

Fabric-covered tile accepts Customer's Own Material (COM). Yardage is estimated for directional, 54″-wide fabrics.

Height—Yardage
22″—0.70
29″—0.90

For tackable fabric, horizontal option (R):

Width—Yardage
24″—0.80
30″—1.00
36″—1.10
42″—1.30
48″—1.50
54″—1.60
60″—1.80
66″—2.00
72″—2.10
78″—2.30
84″—2.50
96″—2.80

For information on multiple quantities or directional fabrics, contact COM Department. See Order Information in appendices.

Dimensions

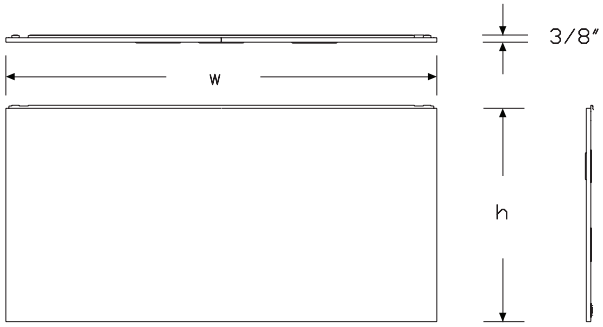

For 36″,42″,48″,54″ and 78″ wide tiles

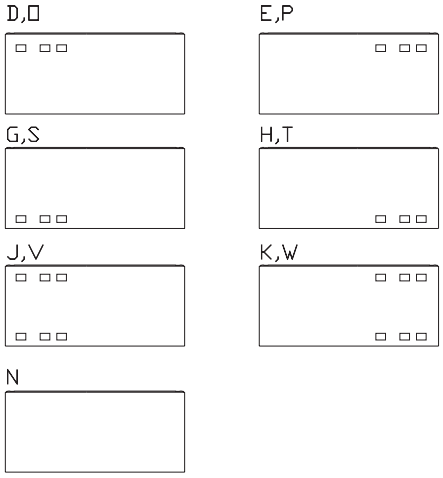

For 60″,66″,72″,84″ and 96″ wide tiles

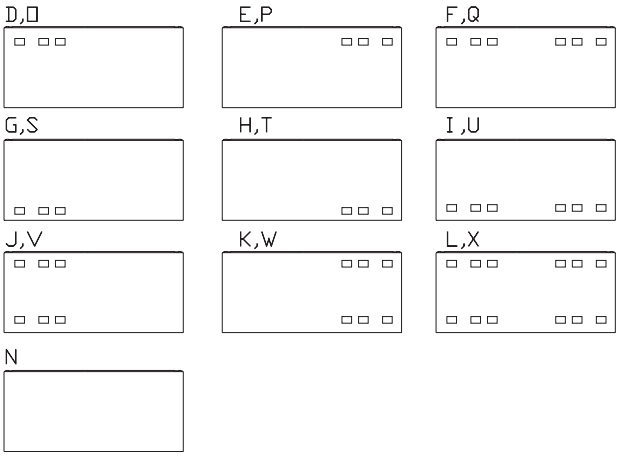

Specification Information

Step 1.

FZ375. A

Step 2. Surface Material

T fabric A
R fabric, horizontal A
P painted A

Step 3. Height

22 22" high A
29 29" high A

Step 4. Width

For fabric (T)

24 24" wide A
30 30" wide A
36 36" wide A
42 42" wide A
48 48" wide A

For fabric, horizontal (R)

24 24" wide A
30 30" wide A
36 36" wide A
42 42" wide A
48 48" wide A
54 54" wide A
60 60" wide A
66 66" wide A
72 72" wide A
78 78" wide A
84 84" wide A
96 96" wide A

For painted (P)

24 24" wide A
30 30" wide A
36 36" wide A
42 42" wide A
48 48" wide A
54 54" wide A
60 60" wide A
66 66" wide A
72 72" wide A

Step 5. Cutout Location

For fabric (T), fabric, horizontal (R), or painted (P) with 24" wide (24) or 30" wide (30)

N no cutout A

For fabric (T) or fabric, horizontal (R) with 36" wide (36), 42" wide (42), 48" wide (48), 54" wide (54), or 78" wide (78)

N no cutout A
D power/data cutouts at LH top of cladding A
E power/data cutouts at RH top of cladding A
G power/data cutouts at LH bottom of cladding A
H power/data cutouts at RH bottom of cladding A
J power/data cutouts in the LH top and bottom of cladding A
K power/data cutouts in the RH top and bottom of cladding A
O power/data cutouts at LH top of cladding (meets Chicago electrical code requirements) A
P power/data cutouts at RH top of cladding (meets Chicago electrical code requirements) A
S power/data cutouts at LH bottom fo cladding (meets Chicago electrical code requirements) A
T power/data cutouts at RH bottom of cladding (meets Chicago electrical code requirements) A
V power/data cutouts in the LH top and bottom of cladding (meets Chicago electrical code requirements) A
W power/data cutouts in the RH top and bottom of cladding (meets Chicago electrical code requirements) A

For fabric, horizontal (R) with 60" wide (60), 66" wide (66), 72" wide (72), 84" wide (84), or 96" wide (96)

N no cutout A
D power/data cutouts at LH top of cladding A
E power/data cutouts at RH top of cladding A
F power/data cutouts in the LH and RH top of cladding A
G power/data cutouts at LH bottom of cladding A
H power/data cutouts at RH bottom of cladding A
I power/data cutouts in the LH and RH bottom of cladding A
J power/data cutouts in the LH top and bottom of cladding A
K power/data cutouts in the RH top and bottom of cladding A
L power/data cutouts in the LH and RH top and bottom of cladding A
O power/data cutouts at LH top of cladding (meets Chicago electrical code requirements) A
P power/data cutouts at RH top of cladding (meets Chicago electrical code requirements) A
Q power/data cutouts in the LH and RH top of cladding (meets Chicago electrical code requirements) A
S power/data cutouts at LH bottom fo cladding (meets Chicago electrical code requirements) A
T power/data cutouts at RH bottom of cladding (meets Chicago electrical code requirements) A
U power/data cutouts in the LH and RH bottom of cladding (meets Chicago electrical code requirements) A
V power/data cutouts in the LH top and bottom of cladding (meets Chicago electrical code requirements) A
W power/data cutouts in the RH top and bottom of cladding (meets Chicago electrical code requirements) A
X power/data cutouts in the LH and RH top and bottom of cladding (meets Chicago electrical code requirements) A

For painted (P) with 36" wide (36), 42" wide (42), 48" wide (48), or 54" wide (54)

N no cutout A
D power/data cutouts at LH top of cladding A
E power/data cutouts at RH top of cladding A
G power/data cutouts at LH bottom of cladding A
H power/data cutouts at RH bottom of cladding A
J power/data cutouts in the LH top and bottom of cladding A
K power/data cutouts in the RH top and bottom of cladding A

For painted (P) with 60" wide (60), 66" wide (66), or 72" wide (72)

N no cutout A
D power/data cutouts at LH top of cladding A
E power/data cutouts at RH top of cladding A
F power/data cutouts in the LH and RH top of cladding A
G power/data cutouts at LH bottom of cladding A
H power/data cutouts at RH bottom of cladding A
I power/data cutouts in the LH and RH bottom of cladding A
J power/data cutouts in the LH top and bottom of cladding A
K power/data cutouts in the RH top and bottom of cladding A
L power/data cutouts in the LH and RH top and bottom of cladding A

Prices for Steps 1-5.

			24N	30N	36N	36D	36E	36G
FZ375.	**T**	**22**	$176	184	194	235	235	235
		29	$181	189	199	240	240	240
	R	**22**	$176	184	194	235	235	235
		29	$181	189	199	240	240	240
	P	**22**	$245	258	272	329	329	329
		29	$253	265	279	336	336	336

			36H	36J	36K	36O	36P	36S
FZ375.	**T**	**22**	$235	245	245	235	235	235
		29	$240	250	250	240	240	240
	R	**22**	$235	245	245	235	235	235
		29	$240	250	250	240	240	240
	P	**22**	$329	343	343	—	—	—
		29	$336	350	350	—	—	—

			36T	36V	36W	42N	42D	42E
FZ375.	**T**	**22**	$235	245	245	204	245	245
		29	$240	250	250	210	250	250
	R	**22**	$235	245	245	204	245	245
		29	$240	250	250	210	250	250
	P	**22**	—	—	—	$286	343	343
		29	—	—	—	$293	350	350

			42G	42H	42J	42K	42O	42P
FZ375.	**T**	**22**	$245	245	255	255	245	245
		29	$250	250	261	261	250	250
	R	**22**	$245	245	255	255	245	245
		29	$250	250	261	261	250	250
	P	**22**	$343	343	357	357	—	—
		29	$350	350	365	365	—	—

			42S	42T	42V	42W	48N	48D
FZ375.	T	22	$245	245	255	255	213	253
		29	$250	250	261	261	218	259
	R	22	$245	245	255	255	213	253
		29	$250	250	261	261	218	259
	P	22	—	—	—	—	$297	354
		29	—	—	—	—	$304	362

			48E	48G	48H	48J	48K	48O
FZ375.	T	22	$253	253	253	264	264	253
		29	$259	259	259	269	269	259
	R	22	$253	253	253	264	264	253
		29	$259	259	259	269	269	259
	P	22	$354	354	354	369	369	—
		29	$362	362	362	376	376	—

			48P	48S	48T	48V	48W	54N
FZ375.	T	22	$253	253	253	264	264	—
		29	$259	259	259	269	269	—
	R	22	$253	253	253	264	264	240
		29	$259	259	259	269	269	245
	P	22	—	—	—	—	—	$336
		29	—	—	—	—	—	$343

			54D	54E	54G	54H	54J	54K
FZ375.	R	22	$281	281	281	281	291	291
		29	$286	286	286	286	296	296
	P	22	$393	393	393	393	407	407
		29	$400	400	400	400	415	415

			54O	54P	54S	54T	54V	54W
FZ375.	R	22	$281	281	281	281	291	291
		29	$286	286	286	286	296	296

			60N	60D	60E	60F	60G	60H
FZ375.	R	22	$271	312	312	322	312	312
		29	$276	317	317	327	317	317
	P	22	$379	436	436	450	436	436
		29	$386	443	443	457	443	443

			60I	60J	60K	60L	60O	60P
FZ375.	R	22	$322	322	322	332	312	312
		29	$327	327	327	337	317	317
	P	22	$450	450	450	465	—	—
		29	$457	457	457	472	—	—

			60Q	60S	60T	60U	60V	60W
FZ375.	R	22	$322	312	312	322	322	322
		29	$327	317	317	327	327	327

			60X	66N	66D	66E	66F	66G
FZ375.	R	22	$332	291	332	332	342	332
		29	$337	296	337	337	347	337
	P	22	—	$407	465	465	479	465
		29	—	$415	472	472	486	472

			66H	66I	66J	66K	66L	66O
FZ375.	R	22	$332	342	342	342	352	332
		29	$337	347	347	347	357	337
	P	22	$465	479	479	479	493	—
		29	$472	486	486	486	500	—

			66P	66Q	66S	66T	66U	66V
FZ375.	R	22	$332	342	332	332	342	342
		29	$337	347	337	337	347	347

			66W	66X	72N	72D	72E	72F
FZ375.	R	22	$342	352	301	342	342	352
		29	$347	357	306	347	347	357
	P	22	—	—	$422	479	479	493
		29	—	—	$429	486	486	500

			72G	72H	72I	72J	72K	72L
FZ375.	R	22	$342	342	352	352	352	363
		29	$347	347	357	357	357	368
	P	22	$479	479	493	493	493	507
		29	$486	486	500	500	500	515

			72O	72P	72Q	72S	72T	72U
FZ375.	R	22	$342	342	352	342	342	352
		29	$347	347	357	347	347	357

			72V	72W	72X	78N	78D	78E
FZ375.	R	22	$352	352	363	312	352	352
		29	$357	357	368	317	357	357

			78G	78H	78J	78K	78O	78P
FZ375.	R	22	$352	352	363	363	352	352
		29	$357	357	368	368	357	357

			78S	78T	78V	78W	84N	84D
FZ375.	R	22	$352	352	363	363	317	357
		29	$357	357	368	368	322	363

		84E	84F	84G	84H	84I	84J
FZ375. R	**22**	$357	368	357	357	368	368
	29	$363	373	363	363	373	373

		84K	84L	84O	84P	84Q	84S
FZ375. R	**22**	$368	378	357	357	368	357
	29	$373	383	363	363	373	363

		84T	84U	84V	84W	84X	96N
FZ375. R	**22**	$357	368	368	368	378	337
	29	$363	373	373	373	383	342

		96D	96E	96F	96G	96H	96I
FZ375. R	**22**	$378	378	388	378	378	388
	29	$383	383	393	383	383	393

		96J	96K	96L	96O	96P	96Q
FZ375. R	**22**	$388	388	398	378	378	388
	29	$393	393	403	383	383	393

		96S	96T	96U	96V	96W	96X
FZ375. R	**22**	$378	378	388	388	388	398
	29	$383	383	393	393	393	403

Step 6. Surface Finish

For painted (P)

8Q	folkstone grey A	+$0
91	white A	+$0
98	studio white A	+$0
CL	cool grey neutral A	+$0
G1	graphite A	+$0
WL	sandstone A	+$0
WN	warm grey neutral A	+$0

For painted (P)

CN	metallic champagne A	+$0
EH	metallic bronze A	+$0
MS	metallic silver A	+$0

For fabric (T) AND fabric, horizontal (R)

	22	29
Price Category 1	+$0	0
Price Category 2	+$13	19
Price Category 3	+$21	33
Price Category 4	+$33	51
Price Category 5	+$69	103
Price Category B	+$35	52
Price Category C	+$52	79
Price Category D	+$69	103
Price Category E	+$84	128
Price Category F	+$122	174
Price Category G	+$158	226

Step 7. Receptacle Trim Finish

For power/data cutouts at LH top of cladding (D), power/data cutouts at RH top of cladding (E), power/data cutouts in the LH and RH top of cladding (F), power/data cutouts at LH bottom of cladding (G), power/data cutouts at RH bottom of cladding (H), power/data cutouts in the LH top and bottom of cladding (J), power/data cutouts in the LH and RH bottom of cladding (I), power/data cutouts in the RH top and bottom of cladding (K), power/data cutouts at LH top of cladding (meets Chicago electrical code requirements) (O), power/data cutouts at RH top of cladding (meets Chicago electrical code requirements) (P), power/data cutouts in the LH and RH top and bottom of cladding (L), power/data cutouts at LH bottom fo cladding (meets Chicago electrical code requirements) (S), power/data cutouts at RH bottom of cladding (meets Chicago electrical code requirements) (T), power/data cutouts in the LH top and bottom of cladding (meets Chicago electrical code requirements) (V), power/data cutouts in the LH and RH top of cladding (meets Chicago electrical code requirements) (Q), power/data cutouts in the RH top and bottom of cladding (meets Chicago electrical code requirements) (W), power/data cutouts in the LH and RH bottom of cladding (meets Chicago electrical code requirements) (U), or power/data cutouts in the LH and RH top and bottom of cladding (meets Chicago electrical code requirements) (X)

8Q	folkstone grey A	+$0
91	white A	+$0
98	studio white A	+$0
BK	black A	+$0
CL	cool grey neutral A	+$0
G1	graphite A	+$0
WL	sandstone A	+$0
WN	warm grey neutral A	+$0

Power Entry, Internal Direct Connect - Floor FZ144.

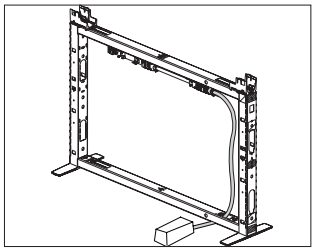

Product Information

Description

This power entry connects a building's electrical supply from a wall, floor or column to a powered frame. It enters the frame through one of the rectangular cutouts in the bottom rail of the frame. The power entry plugs into the side of a power harness and includes a cable that can be field cut to the appropriate length. Power entry is UL listed and Canadian UL listed.

Notes

Power entry does not take up a receptacle location when connecting to the frame harness.

Power entry connects directly to the harness (FZ150.) in the top or bottom power location.

Power entry cannot route through a connector.

For an application using to-the-floor tiles (FZ375.), order power entry, external direct connect (FZ140.).

Licensed electrician must wire power entry.

PVC coated liquid tight conduit.

Dimensions

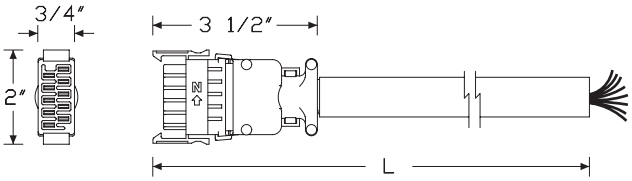

Specification Information

Step 1.

FZ144. A

Step 2. Configuration

08 8-wire, 4-circuit, shared neutral A

10 10-wire, 4-circuit, separate neutrals A

Step 3. Length

06 6' long A

12 12' long A

18 18' long A

24 24' long A

Prices for Steps 1-3.

		06	12	18	24
FZ144.	**08**	$250	288	355	422
	10	$250	288	355	422

Power Entry, External Direct Connect FZ140.

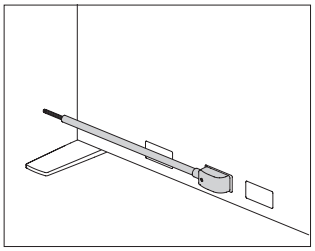

Product Information

Description

This power entry connects a building's electrical supply from a wall, floor, or column to a frame's power harness. It plugs directly into a receptacle location to distribute up to 4 20-amp circuits. The power entry is manufactured in a right-hand direction but can be field converted to a left-hand direction. The cable is available in 4 lengths and can be field cut to the appropriate length. Power entry is UL listed and Canadian UL listed.

Notes

Power entry uses 1 receptacle location.

Licensed electrician must wire power entry.

PVC coated liquid tight conduit.

Dimensions

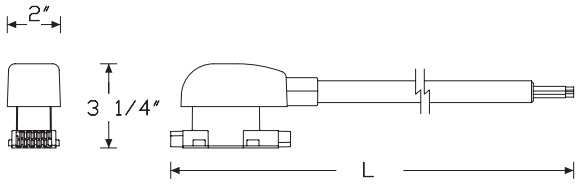

Specification Information

Step 1.

FZ140. A

Step 2. Configuration

08 8-wire, 4-circuit, shared neutral A

10 10-wire, 4-circuit, separate neutrals A

Step 3. Length

06 6′ long A

12 12′ long A

18 18′ long A

24 24′ long A

Prices for Steps 1-3.

		06	12	18	24
FZ140.	**08**	$204	272	346	419
	10	$204	272	346	419

Power Entry, New York - Floor FZ141.

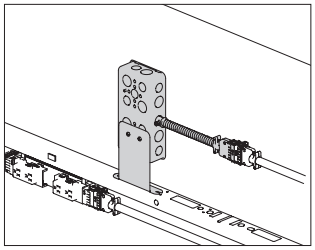

Product Information

Description

This floor power entry connects a building's electrical supply from a wall, floor or column to the power harness. It connects to the modular connection location on the end of a power harness, and includes a junction box. Power entry is UL listed and Canadian UL listed.

Notes

Licensed electrician must wire power entry.

Power entry uses 1 modular connection location on each end of adjacent power harnesses (FZ150.).

Power harness (FZ150.) is required. Order separately.

Dimensions

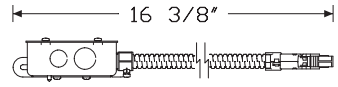

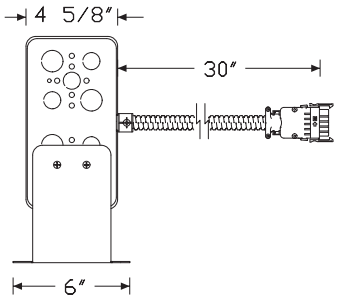

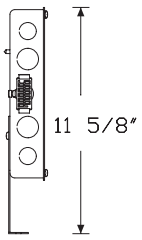

Specification Information

Step 1.

FZ141. A

Step 2. Configuration

08	8-wire, 4-circuit, shared neutral A	
10	10-wire, 4-circuit, separate neutrals A	

Prices for Steps 1-2.

FZ141.	**08**	$389
	10	$389

Power Entry - Ceiling FZ142.

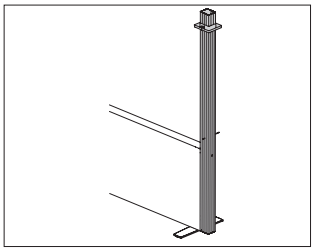

Product Information

Description

This power entry connects a ceiling electrical supply to the end of a frame. It distributes up to 4 20-amp circuits. The power entry comes with a 10'-high pole that can be field cut to the appropriate length, ceiling trim, connecting hardware conduit, and factory supplied electrical harness. Power entry plugs into the end of the harness. Power entry is UL listed and Canadian UL listed.

Notes

When using ceiling power entry on end of run, finished end is not required.

Power entry uses 1 modular connection location on each end of adjacent power harnesses (FZ150.).

Licensed electrician must wire power entry.

Power harness (FZ150.) is required. Order separately.

Dimensions

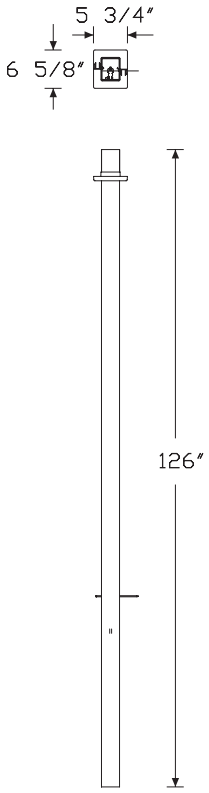

Specification Information

Step 1.

FZ142. A

Step 2. Frame Height

22	22" high A
29	29" high A

Step 3. Base Option

A	open base A
B	to-the-floor A

Step 4. Power Connection

08	8-wire, 4-circuit, shared neutral A
10	10-wire, 4-circuit, separate neutrals A
N	nonpowered A

Prices for Steps 1-4.

			08	10	N
FZ142.	**22**	**A**	$801	801	448
		B	$801	801	448
	29	**A**	$801	801	448
		B	$801	801	448

Step 5. Finish

8Q	folkstone grey A	+$0
91	white A	+$0
98	studio white A	+$0
BK	black A	+$0
CL	cool grey neutral A	+$0
G1	graphite A	+$0
WL	sandstone A	+$0
WN	warm grey neutral A	+$0

Power Harness FZ150.

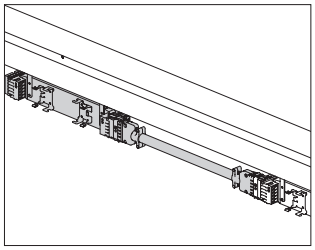

Product Information

Description

This power harness converts a nonpowered frame to a powered frame at the top and/or base location. 36"-54" wide harnesses have up to 4 20-amp circuits and provide up to 4 receptacle locations on each side of the frame. 60"-96" wide harnesses have up to 4 20-amp circuits and provide up to 8 receptacle locations on each side of the frame. Harness is UL listed and Canadian UL listed.

Notes

Specify width of power harness to match width of channel structure.

Specify 1 harness to fill a top power location.

Specify 1 harness to fill a bottom power location.

To connect harnesses through frames, specify power jumpers (FZ154.) separately.

36"-54" wide harnesses have up to 4 20-amp circuits and provide up to 4 receptacle locations on each side of the frame.

60"-96" wide harnesses have up to 4 20-amp circuits and provide up to 8 receptacle locations on each side of the frame.

When using an 84"-wide tile, specify 1 84"-wide harness.

When using a 96"-wide tile, specify 1 96"-wide harness.

Dimensions

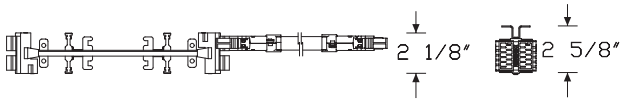

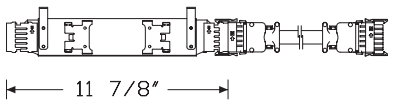

36" - 54" wide

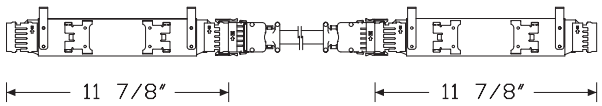

60" - 96" wide

Specification Information

Step 1.

FZ150. A

Step 2. Configuration

08	8-wire, 4-circuit, shared neutral A
10	10-wire, 4-circuit, separate neutrals A

Step 3. Frame Width

36	36" wide A
42	42" wide A
48	48" wide A
54	54" wide A
60	60" wide A
66	66" wide A
72	72" wide A
84	84" wide A
96	96" wide A

Prices for Steps 1-3.

		36	42	48	54	60	66
FZ150.	**08**	$159	169	189	210	250	271
	10	$159	169	189	210	250	271

		72	84	96
FZ150.	**08**	$291	332	373
	10	$291	332	373

Power Jumper FZ154.

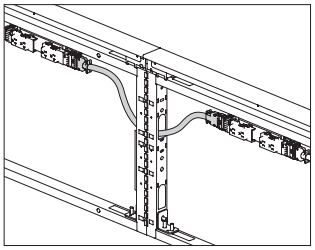

Product Information

Description

This power jumper connects power horizontally or vertically from 1 power harness to another. It connects power within a frame or between adjacent frames. The power jumper connects into the end of a harness; it does not connect into a receptacle location. Power jumper is UL listed and Canadian UL listed.

Notes

Jumpers are optimized in length to run through 90° and 120° connectors.

Order power harness (FZ150.) separately.

Dimensions

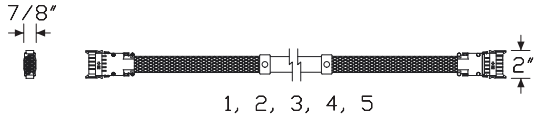

Specification Information

Step 1.

FZ154. A

Step 2. Configuration

08 8-wire, 4-circuit, shared neutral A

10 10-wire, 4-circuit, separate neutrals A

Step 3. Usage

1 inline jumper, frame to frame A

2 inline jumper for use through a 24″ frame A

3 inline jumper for use through a 30″ frame A

4 vertical jumper, within frame, top to bottom A

5 vertical jumper, adjacent frames, top to bottom A

Prices for Steps 1-3.

		1	2	3	4	5
FZ154.	**08**	$117	133	143	117	127
	10	$117	133	143	117	127

Receptacle, 4-Circuit, 15 amp (package of 6) FZ152.

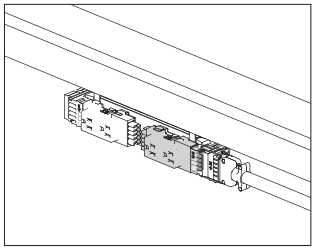

Product Information

Description

This receptacle locks into the power harness of a frame. It is UL listed and Canadian UL listed. Package contains 6 receptacles.

Dimensions

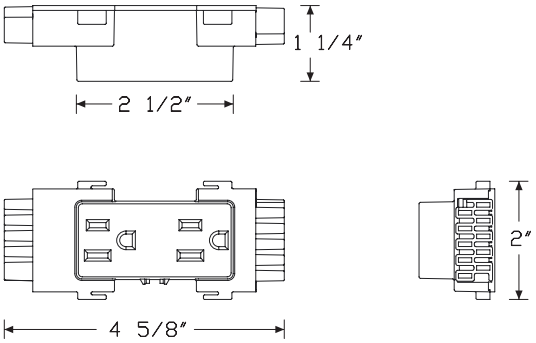

Specification Information

Step 1.

FZ152. A

Step 2. Type

AN	8-wire duplex, shared neutral, circuit a A
BN	8-wire duplex, shared neutral, circuit b A
CN	8-wire duplex, shared neutral, circuit c A
DN	8-wire duplex, shared neutral, circuit d A
AG	8-wire duplex, shared neutral, circuit a, isolated ground A
BG	8-wire duplex, shared neutral, circuit b, isolated ground A
CG	8-wire duplex, shared neutral, circuit c, isolated ground A
DG	8-wire duplex, shared neutral, circuit d, isolated ground A
1N	10-wire duplex, separate neutrals, circuit 1 A
2N	10-wire duplex, separate neutrals, circuit 2 A
3N	10-wire duplex, separate neutrals, circuit 3 A
4N	10-wire duplex, separate neutrals, circuit 4 A
1G	10-wire duplex, separate neutrals, circuit 1, isolated ground A
2G	10-wire duplex, separate neutrals, circuit 2, isolated ground A
3G	10-wire duplex, separate neutrals, circuit 3, isolated ground A
4G	10-wire duplex, separate neutrals, circuit 4, isolated ground A

Prices for Steps 1-2.

FZ152.	**AN**	$186
	BN	$186
	CN	$186
	DN	$186
	AG	$186
	BG	$186
	CG	$186
	DG	$186
	1N	$186
	2N	$186
	3N	$186
	4N	$186
	1G	$186
	2G	$186
	3G	$186
	4G	$186

Receptacle, 4-Circuit, 15 amp (package of 6) *continued*

Step 3. Finish

Sand Texture Paint		
8Q	folkstone grey A	+$0
91	white A	+$0
98	studio white A	+$0
BK	black A	+$0
CL	cool grey neutral A	+$0
G1	graphite A	+$0
WL	sandstone A	+$0
WN	warm grey neutral A	+$0

Controlled Receptacle, 4-Circuit, 15 amp (package of 6) FZ152M

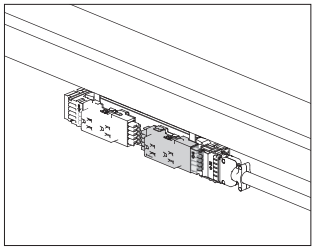

Product Information

Description

This receptacle is to be used for ASHRAE90.1 and Title 24 compliance. A controlled receptacle should be used for any receptacles that are under automated control by the energy management system. The receptacle locks into the power harness of a frame. Package contains 6 receptacles. It is UL listed and Canadian UL listed.

Dimensions

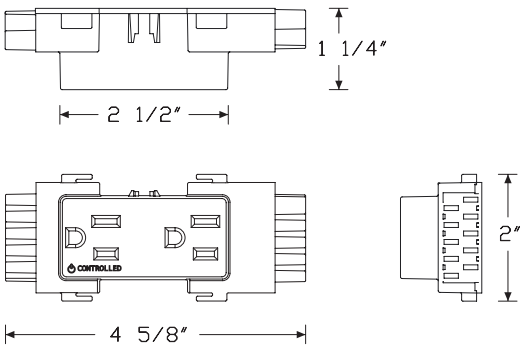

Specification Information

Step 1.

FZ152M. A

Step 2. Type

AN	8-wire duplex, shared neutral, circuit a A
BN	8-wire duplex, shared neutral, circuit b A
CN	8-wire duplex, shared neutral, circuit c A
DN	8-wire duplex, shared neutral, circuit d A
AG	8-wire duplex, shared neutral, circuit a, isolated ground A
BG	8-wire duplex, shared neutral, circuit b, isolated ground A
CG	8-wire duplex, shared neutral, circuit c, isolated ground A
DG	8-wire duplex, shared neutral, circuit d, isolated ground A
1N	10-wire duplex, separate neutrals, circuit 1 A
2N	10-wire duplex, separate neutrals, circuit 2 A
3N	10-wire duplex, separate neutrals, circuit 3 A
4N	10-wire duplex, separate neutrals, circuit 4 A
1G	10-wire duplex, separate neutrals, circuit 1, isolated ground A
2G	10-wire duplex, separate neutrals, circuit 2, isolated ground A
3G	10-wire duplex, separate neutrals, circuit 3, isolated ground A
4G	10-wire duplex, separate neutrals, circuit 4, isolated ground A

Prices for Steps 1-2.

FZ152M.	**AN**	$186
	BN	$186
	CN	$186
	DN	$186
	AG	$186
	BG	$186
	CG	$186
	DG	$186
	1N	$186
	2N	$186
	3N	$186
	4N	$186
	1G	$186
	2G	$186
	3G	$186
	4G	$186

Controlled Receptacle, 4-Circuit, 15 amp (package of 6) *continued*

Step 3. Finish		
BK	black A	+$0
8Q	folkstone grey A	+$0
91	white A	+$0
98	studio white A	+$0
CL	cool grey neutral A	+$0
G1	graphite A	+$0
WL	sandstone A	+$0
WN	warm grey neutral A	+$0

Receptacle, 4-Circuit, 20 amp FZ153.

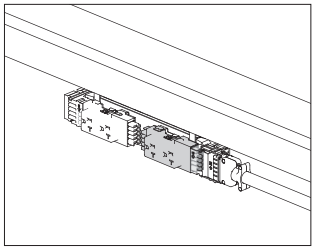

Product Information

Description

This receptacle snaps into an 8-wire, 4-circuit, shared neutral power harness or a 10-wire, 4-circuit, separate neutral power harness to provide power to equipment with a 20-amp standard plug head or cap. It also accepts 15-amp standard plug heads or caps. Package contains 1 receptacle. Receptacle is UL listed.

Notes

Avoid overloading circuit by ensuring total connected load does not exceed 16 amps. If 1 piece of equipment requires all available power, do not use receptacle's second outlet or install additional receptacles on that circuit. In many cases, equipment requiring this receptacle will use all available power.

Dimensions

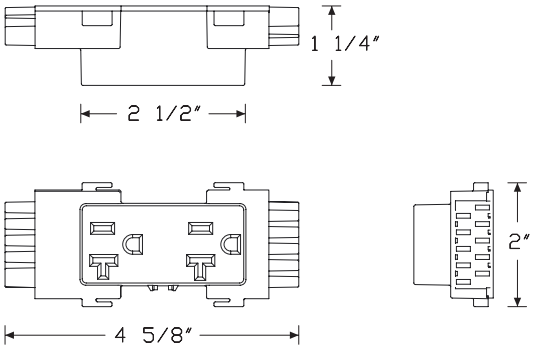

Specification Information

Step 1.

FZ153. A

Step 2. Type

AN	8-wire duplex, shared neutral, circuit a A
BN	8-wire duplex, shared neutral, circuit b A
AG	8-wire duplex, shared neutral, circuit a, isolated ground A
BG	8-wire duplex, shared neutral, circuit b, isolated ground A
1N	10-wire duplex, separate neutrals, circuit 1 A
2N	10-wire duplex, separate neutrals, circuit 2 A
1G	10-wire duplex, separate neutrals, circuit 1, isolated ground A
2G	10-wire duplex, separate neutrals, circuit 2, isolated ground A

Prices for Steps 1-2.

FZ153.	**AN**	$48
	BN	$48
	AG	$48
	BG	$48
	1N	$48
	2N	$48
	1G	$48
	2G	$48

Step 3. Finish

Sand Texture Paint

8Q	folkstone grey A	+$0
91	white A	+$0
98	studio white A	+$0
BK	black A	+$0
CL	cool grey neutral A	+$0
G1	graphite A	+$0
WL	sandstone A	+$0
WN	warm grey neutral A	+$0

Controlled Receptacle, 4-Circuit, 20 amp FZ153M

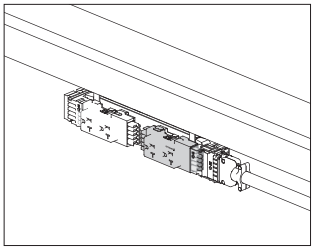

Product Information

Description

This receptacle is to be used for ASHRAE90.1 and Title 24 compliance. A controlled receptacle should be used for any receptacles that are under automated control by the energy management system. This receptacle snaps into an 8-wire, 4-circuit, shared neutral power harness or a 10-wire, 4-circuit, separate neutral power harness to provide power to equipment with a 20-amp standard plug head or cap. It also accepts 15-amp standard plug heads or caps. Package contains 1 receptacle. Receptacle is UL listed.

Notes

Avoid overloading circuit by ensuring total connected load does not exceed 16 amps. If 1 piece of equipment requires all available power, do not use receptacle's second outlet or install additional receptacles on that circuit. In many cases, equipment requiring this receptacle will use all available power.

Dimensions

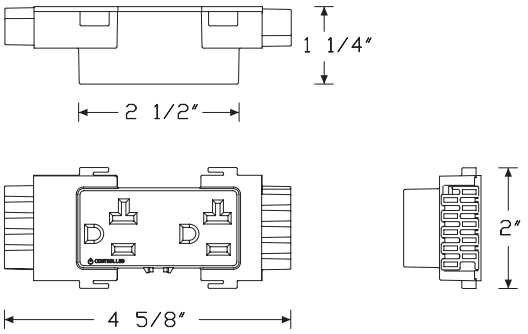

Specification Information

Step 1.

FZ153M. A

Step 2. Type

AN	8-wire duplex, shared neutral, circuit a A
BN	8-wire duplex, shared neutral, circuit b A
AG	8-wire duplex, shared neutral, circuit a, isolated ground A
BG	8-wire duplex, shared neutral, circuit b, isolated ground A
1N	10-wire duplex, separate neutrals, circuit 1 A
2N	10-wire duplex, separate neutrals, circuit 2 A
1G	10-wire duplex, separate neutrals, circuit 1, isolated ground A
2G	10-wire duplex, separate neutrals, circuit 2, isolated ground A

Prices for Steps 1-2.

FZ153M.	**AN**	$48
	BN	$48
	AG	$48
	BG	$48
	1N	$48
	2N	$48
	1G	$48
	2G	$48

Step 3. Finish

Sand Texture Paint

8Q	folkstone grey A	+$0
91	white A	+$0
98	studio white A	+$0
BK	black A	+$0
CL	cool grey neutral A	+$0
G1	graphite A	+$0
WL	sandstone A	+$0
WN	warm grey neutral A	+$0

Dual USB Charging Module, 2 Amp

FW15U.

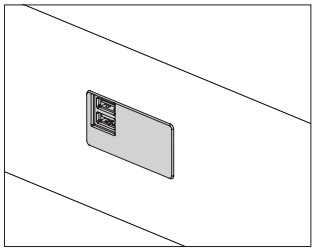

Product Information

Description

This dual USB charging module locks into the power harness of the Canvas beam. Total output for both USB ports combined is 10 watts. The charging module is powered by circuit a for the 8-wire, and circuit 1 for the 10-wire.

Notes

The USB outlets can charge 2 devices at one time, rated 2 amps (10 watts) or less. It can charge 1 tablet and 1 phone, or 2 phones, at once. Maximum rating for both ports combined is 10 watts.

Dimensions

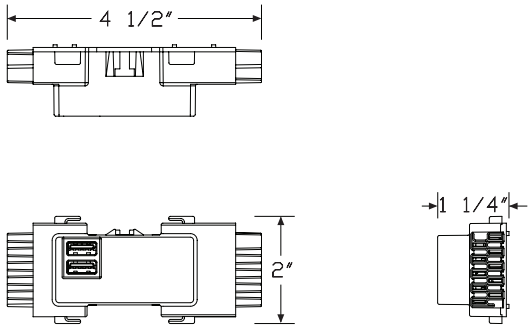

Specification Information

Step 1.

FW15U. A

Step 2. Configuration

08	8-wire, 4-circuit, shared neutral A	
10	10-wire, 4-circuit, separate neutrals A	

Prices for Steps 1-2.

FW15U.08		$139
	10	$139

Step 3. Finish

Sand Texture Paint

8Q	folkstone grey A	+$0
91	white A	+$0
98	studio white A	+$0
BK	black A	+$0
CL	cool grey neutral A	+$0
G1	graphite A	+$0
WL	sandstone A	+$0
WN	warm grey neutral A	+$0

Pari Screen, Frame Top FZ115.

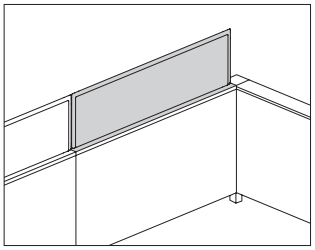

Product Information

Description

This tackable screen attaches to the top of a 22″-high or 29″-high Channel frame to extend the overall height and provide boundary. Bayonets extend through the top cap for attachment, allowing the screen to sit cleanly on the top cap. Frame top cap and attachment hardware included.

Notes

Specify width of screen to match the width of frame.

Screen comes with metal alignment piece that attaches into the top of 2 screens to align them along a run.

Screen accepts Customer's Own Material (COM). Yardage is estimated for directional, 54″-wide fabrics.

For vertical fabric direction (T) with 22″-high frame (22):

Height—Yardage

20″—1.58

24″—1.83

31″—2.27

35″—2.58

For vertical fabric direction (T) with 29″-high frame (29):

Height—Yardage

13″—1.17

17″—1.42

24″—1.83

28″—2.14

For horizontal fabric direction (R):

Width—Yardage

24″—1.89

30″—2.27

36″—2.65

42″—3.02

48″—3.40

54″—3.78

60″—4.16

66″—4.54

72″—4.91

For information on multiple quantities or directional fabrics, contact COM Department. See Order Information in appendices.

Dimensions

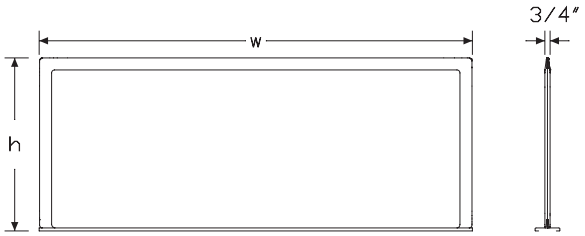

Specification Information

Step 1.

FZ115.

Step 2. Type

F fabric

Step 3. Frame Height

22 use with 22"-high frames

29 use with 29"-high frames

Step 4. Screen Height

For use with 22"-high frames (22)

20 20" high

24 24" high

31 31" high

35 35" high

For use with 29"-high frames (29)

13 13" high

17 17" high

24 24" high

28 28" high

Step 5. Width

24 24" wide

30 30" wide

36 36" wide

42 42" wide

48 48" wide

54 54" wide

60 60" wide

66 66" wide

72 72" wide

Step 6. Surface Material

For 24" wide (24), 30" wide (30), 36" wide (36), 42" wide (42), or 48" wide (48)

T tackable fabric

R tackable fabric, horizontal

For 54" wide (54), 60" wide (60), 66" wide (66), or 72" wide (72)

R tackable fabric, horizontal

Step 7. Top Cap Material

A painted architectural top cap

P painted standard top cap

Prices for Steps 1-7.

		1324TA	1324TP	1324RA	1324RP	1330TA	1330TP
FZ115. F	**29**	$747	713	747	713	792	750

		1330RA	1330RP	1336TA	1336TP	1336RA	1336RP
FZ115. F	**29**	$792	750	846	799	846	799

		1342TA	1342TP	1342RA	1342RP	1348TA	1348TP
FZ115. F	**29**	$896	842	896	842	936	869

		1348RA	1348RP	1354RA	1354RP	1360RA	1360RP
FZ115. F	**29**	$936	869	970	903	1025	955

		1366RA	1366RP	1372RA	1372RP	2024TA	2024TP
FZ115. F	**22**	—	—	—	—	$824	786
	29	$1079	1003	1139	1059	—	—

		2024RA	2024RP	2030TA	2030TP	2030RA	2030RP
FZ115. F	**22**	$824	786	873	827	873	827

		2036TA	2036TP	2036RA	2036RP	2042TA	2042TP
FZ115. F	**22**	$933	881	933	881	988	928

		2042RA	2042RP	2048TA	2048TP	2048RA	2048RP
FZ115. F	**22**	$988	928	1031	958	1031	958

		2054RA	2054RP	2060RA	2060RP	2066RA	2066RP
FZ115. F	**22**	$1132	1053	1195	1114	1259	1170

		2072RA	2072RP	1724TA	1724TP	1724RA	1724RP
FZ115. F	**22**	$1328	1236	—	—	—	—
	29	—	—	$785	748	785	748

		1730TA	1730TP	1730RA	1730RP	1736TA	1736TP
FZ115. F	**29**	$832	788	832	788	889	839

		1736RA	1736RP	1742TA	1742TP	1742RA	1742RP
FZ115. F	**29**	$889	839	941	884	941	884

		1748TA	1748TP	1748RA	1748RP	1754RA	1754RP
FZ115. F	**29**	$982	913	982	913	1048	975

		1760RA	1760RP	1766RA	1766RP	1772RA	1772RP
FZ115. F	**29**	$1107	1032	1165	1083	1230	1144

		2424TA	2424TP	2424RA	2424RP	2430TA	2430TP
FZ115. F	**22**	$865	825	865	825	917	869
	29	$865	825	865	825	917	869

		2430RA	2430RP	2436TA	2436TP	2436RA	2436RP
FZ115. F	**22**	$917	869	980	925	980	925
	29	$917	869	980	925	980	925

		2442TA	2442TP	2442RA	2442RP	2448TA	2448TP
FZ115. F	**22**	$1037	974	1037	974	1083	1006
	29	$1037	974	1037	974	1083	1006

		2448RA	2448RP	2454RA	2454RP	2460RA	2460RP
FZ115. F	**22**	$1083	1006	1188	1106	1255	1170
	29	$1083	1006	1188	1106	1255	1170

		2466RA	2466RP	2472RA	2472RP	3124TA	3124TP
FZ115. F	**22**	$1322	1228	1394	1297	954	910
	29	$1322	1228	1394	1297	—	—

		3124RA	3124RP	3130TA	3130TP	3130RA	3130RP
FZ115. F	**22**	$954	910	1011	958	1011	958

		3136TA	3136TP	3136RA	3136RP	3142TA	3142TP
FZ115. F	**22**	$1080	1020	1080	1020	1143	1074

		3142RA	3142RP	3148TA	3148TP	3148RA	3148RP
FZ115. F	**22**	$1143	1074	1194	1109	1194	1109

		3154RA	3154RP	3160RA	3160RP	3166RA	3166RP
FZ115. F	**22**	$1310	1219	1384	1290	1457	1354

		3172RA	3172RP	2824TA	2824TP	2824RA	2824RP
FZ115. F	**22**	$1537	1430	—	—	—	—
	29	—	—	$909	866	909	866

		2830TA	2830TP	2830RA	2830RP	2836TA	2836TP
FZ115. F	**29**	$963	912	963	912	1029	971

		2836RA	2836RP	2842TA	2842TP	2842RA	2842RP
FZ115. F	**29**	$1029	971	1089	1023	1089	1023

		2848TA	2848TP	2848RA	2848RP	2854RA	2854RP
FZ115. F	**29**	$1137	1057	1137	1057	1248	1161

		2860RA	2860RP	2866RA	2866RP	2872RA	2872RP
FZ115. F	**29**	$1318	1229	1388	1290	1464	1362

		3524TA	3524TP	3524RA	3524RP	3530TA	3530TP
FZ115. F	**22**	$1002	955	1002	955	1061	1006

		3530RA	3530RP	3536TA	3536TP	3536RA	3536RP
FZ115. F	**22**	$1061	1006	1134	1071	1134	1071

		3542TA	3542TP	3542RA	3542RP	3548TA	3548TP
FZ115. F	**22**	$1201	1128	1201	1128	1254	1165

		3548RA	3548RP	3554RA	3554RP	3560RA	3560RP
FZ115. F	**22**	$1254	1165	1376	1280	1453	1354

		3566RA	3566RP	3572RA	3572RP
FZ115. F	**22**	$1530	1422	1614	1502

Step 8. Top Cap Finish

Sand Texture Paint		
8Q	folkstone grey	+$0
91	white	+$0
98	studio white	+$0
BK	black	+$0
CL	cool grey neutral	+$0
G1	graphite	+$0
WL	sandstone	+$0
WN	warm grey neutral	+$0

Metallic Paint		
CN	metallic champagne	+$0
EH	metallic bronze	+$0
MS	metallic silver	+$0

Step 9. Fabric

	24	**30**	**36**	**42**	**48**
Price Category 1	+$0	0	0	0	0
Price Category 2	+$15	15	23	23	23
Price Category 3	+$35	35	54	54	54
Price Category 4	+$61	61	94	94	94
Price Category E	+$124	124	172	172	172

	54	60	66	72
Price Category 1	+$0	0	0	0
Price Category 2	+$27	27	33	33
Price Category 3	+$65	65	78	78
Price Category 4	+$113	113	135	135
Price Category E	+$172	172	197	197

Flat Edge Screen, Frame Top FZ116.

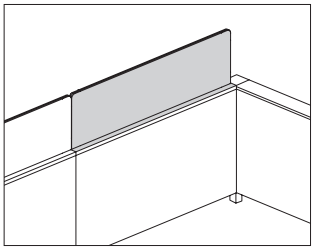

Product Information

Description

This tackable screen attaches to the top of a 22″-high or 29″-high Channel frame to extend the overall height and provide boundary. Bayonets extend through the top cap for attachment, allowing the screen to sit cleanly on the top cap. Frame top cap and attachment hardware included.

Notes

Specify width of screen to match the width of frame.

Screen accepts Customer's Own Material (COM). Yardage is estimated for directional, 54″-wide fabrics.

For vertical fabric direction (T) with 22″-high frame (22):

Height—Yardage

20″—1.58

24″—1.83

31″—2.27

35″—2.58

For vertical fabric direction (T) with 29″-high frame (29):

Height—Yardage

13″—1.17

17″—1.42

24″—1.83

28″—2.14

For horizontal fabric direction (R):

Width—Yardage

24″—1.89

30″—2.27

36″—2.65

42″—3.02

48″—3.40

54″—3.78

60″—4.16

66″—4.54

72″—4.91

For information on multiple quantities or directional fabrics, contact COM Department. See Order Information in appendices.

Dimensions

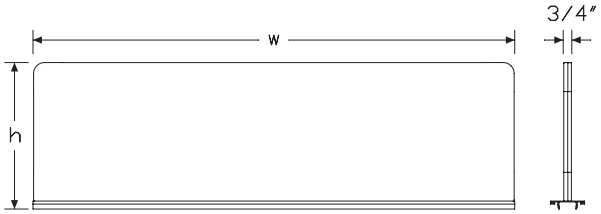

Flat Edge Screen, Frame Top

continued

Specification Information

Step 1.

FZ116. A

Step 2. Type

F fabric A

Step 3. Frame Height

22 22" high A
29 29" high A

Step 4. Screen Height

For 22" high (22)

20 20" high A
24 24" high A
31 31" high A
35 35" high A

For 29" high (29)

13 13" high A
17 17" high A
24 24" high A
28 28" high A

Step 5. Width

24 24" wide A
30 30" wide A
36 36" wide A
42 42" wide A
48 48" wide A
54 54" wide A
60 60" wide A
66 66" wide A
72 72" wide A

Step 6. Surface Material

For 24" wide (24), 30" wide (30), 36" wide (36), 42" wide (42), or 48" wide (48)

T tackable fabric A
R tackable fabric, horizontal A

For 54" wide (54), 60" wide (60), 66" wide (66), or 72" wide (72)

R tackable fabric, horizontal A

Step 7. Top Cap Material

A painted architectural top cap A
P painted standard top cap A

Prices for Steps 1-7.

		1324TA	1324TP	1324RA	1324RP	1330TA	1330TP
FZ116. F	**29**	$598	570	598	570	634	600

		1330RA	1330RP	1336TA	1336TP	1336RA	1336RP
FZ116. F	**29**	$634	600	677	639	677	639

		1342TA	1342TP	1342RA	1342RP	1348TA	1348TP
FZ116. F	**29**	$717	673	717	673	748	695

		1348RA	1348RP	1354RA	1354RP	1360RA	1360RP
FZ116. F	**29**	$748	695	776	722	820	764

		1366RA	1366RP	1372RA	1372RP	2024TA	2024TP
FZ116. F	**22**	—	—	—	—	$659	629
	29	$863	802	911	847	—	—

		2024RA	2024RP	2030TA	2030TP	2030RA	2030RP
FZ116. F	**22**	$659	629	699	662	699	662

		2036TA	2036TP	2036RA	2036RP	2042TA	2042TP
FZ116. F	**22**	$747	705	747	705	790	742

		2042RA	2042RP	2048TA	2048TP	2048RA	2048RP
FZ116. F	**22**	$790	742	825	767	825	767

		2054RA	2054RP	2060RA	2060RP	2066RA	2066RP
FZ116. F	**22**	$905	842	956	891	1007	936

		2072RA	2072RP	1724TA	1724TP	1724RA	1724RP
FZ116. F	**22**	$1062	988	—	—	—	—
	29	—	—	$628	599	628	599

		1730TA	1730TP	1730RA	1730RP	1736TA	1736TP
FZ116. F	**29**	$665	630	665	630	711	671

		1736RA	1736RP	1742TA	1742TP	1742RA	1742RP
FZ116. F	**29**	$711	671	753	707	753	707

		1748TA	1748TP	1748RA	1748RP	1754RA	1754RP
FZ116. F	**29**	$786	730	786	730	838	780

		1760RA	1760RP	1766RA	1766RP	1772RA	1772RP
FZ116. F	**29**	$885	825	932	866	984	915

		2424TA	2424TP	2424RA	2424RP	2430TA	2430TP
FZ116. F	**22**	$692	660	692	660	733	695
	29	$692	660	692	660	733	695

		2430RA	2430RP	2436TA	2436TP	2436RA	2436RP
FZ116. F	**22**	$733	695	784	740	784	740
	29	$733	695	784	740	784	740

		2442TA	2442TP	2442RA	2442RP	2448TA	2448TP
FZ116. F	**22**	$830	779	830	779	866	805
	29	$830	779	830	779	866	805

		2448RA	2448RP	2454RA	2454RP	2460RA	2460RP
FZ116. F	**22**	$866	805	951	885	1004	936
	29	$866	805	951	885	1004	936

		2466RA	2466RP	2472RA	2472RP	3124TA	3124TP
FZ116. F	**22**	$1057	983	1115	1038	839	801
	29	$1057	983	1115	1038	—	—

		3124RA	3124RP	3130TA	3130TP	3130RA	3130RP
FZ116. F	**22**	$839	801	890	843	890	843

		3136TA	3136TP	3136RA	3136RP	3142TA	3142TP
FZ116. F	**22**	$951	897	951	897	1006	945

		3142RA	3142RP	3148TA	3148TP	3148RA	3148RP
FZ116. F	**22**	$1006	945	1051	976	1051	976

		3154RA	3154RP	3160RA	3160RP	3166RA	3166RP
FZ116. F	**22**	$1153	1073	1218	1135	1282	1192

		3172RA	3172RP	2824TA	2824TP	2824RA	2824RP
FZ116. F	**22**	$1353	1259	—	—	—	—
	29	—	—	$800	762	800	762

		2830TA	2830TP	2830RA	2830RP	2836TA	2836TP
FZ116. F	**29**	$847	803	847	803	905	855

		2836RA	2836RP	2842TA	2842TP	2842RA	2842RP
FZ116. F	**29**	$905	855	958	900	958	900

		2848TA	2848TP	2848RA	2848RP	2854RA	2854RP
FZ116. F	**29**	$1001	930	1001	930	1098	1022

		2860RA	2860RP	2866RA	2866RP	2872RA	2872RP
FZ116. F	**29**	$1160	1081	1221	1135	1288	1199

		3524TA	3524TP	3524RA	3524RP	3530TA	3530TP
FZ116. F	**22**	$881	841	881	841	934	885

		3530RA	3530RP	3536TA	3536TP	3536RA	3536RP
FZ116. F	**22**	$934	885	998	942	998	942

		3542TA	3542TP	3542RA	3542RP	3548TA	3548TP
FZ116. F	**22**	$1057	992	1057	992	1103	1025

		3548RA	3548RP	3554RA	3554RP	3560RA	3560RP
FZ116. F	**22**	$1103	1025	1210	1126	1278	1192

		3566RA	3566RP	3572RA	3572RP
FZ116. F	**22**	$1346	1251	1420	1322

Step 8. Top Cap Finish

Metallic Paint

CN	metallic champagne A	+$0
EH	metallic bronze A	+$0
MS	metallic silver A	+$0

Sand Texture Paint

8Q	folkstone grey A	+$0
91	white A	+$0
98	studio white A	+$0
BK	black A	+$0
CL	cool grey neutral A	+$0
G1	graphite A	+$0
WL	sandstone A	+$0
WN	warm grey neutral A	+$0

Step 9. Fabric

	24	**30**	**36**	**42**	**48**
Price Category 1	+$0	0	0	0	0
Price Category 2	+$15	15	23	23	23
Price Category 3	+$35	35	54	54	54
Price Category 4	+$61	61	94	94	94
Price Category E	+$124	124	172	172	172

Flat Edge Screen, Frame Top

continued

	54	60	66	72
Price Category 1	+$0	0	0	0
Price Category 2	+$27	27	33	33
Price Category 3	+$65	65	78	78
Price Category 4	+$113	113	135	135
Price Category E	+$172	172	197	197

Glass Screen, Frame Top FZ114.

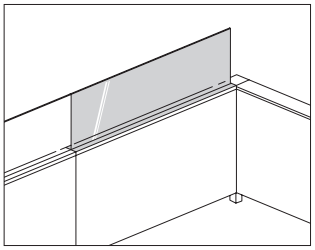

Product Information

Description

This glass screen attaches to the top of a frame to increase the overall height. It has concealed attachment brackets that eliminate the gap between the top of the frame and bottom of the screen. Frame top cap and attachment hardware included.

Notes

Specify width of screen to match the width of 1 frame, or the combined width of 2 frames.

18"- to 48"-wide frame top screens can only span 1 frame. 54"-wide and wider screens can span 2 frames.

Dimensions

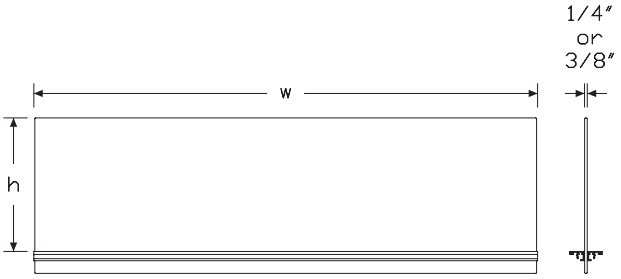

Specification Information

Step 1.

FZ114.

Step 2. Frame Height

22	use with 22"-high frames
29	use with 29"-high frames

Step 3. Screen Height

For use with 22"-high frames (22)

20	20" high
24	24" high

For use with 29"-high frames (29)

13	13" high
17	17" high

Step 4. Width

24	24" wide
30	30" wide
36	36" wide
42	42" wide
48	48" wide
54	54" wide
60	60" wide
66	66" wide
72	72" wide
78	78" wide
84	84" wide
96	96" wide

Step 5. Top Cap Material

A	painted architectural top cap
P	painted standard top cap

Step 6. Surface Finish

For 24" wide (24), 30" wide (30), 36" wide (36), 42" wide (42), 48" wide (48), 54" wide (54), or 60" wide (60) with painted architectural top cap (A)

TR	clear glass - 1/4" thick A
5A	opal etched - 1/4" thick A
NN	no glass- for customer's own glass A
C3	clear glass - 3/8" thick A
G3	opal glass - 3/8" thick A
N3	no glass, for customer's own 3/8" thick glass A

For 24" wide (24), 30" wide (30), 36" wide (36), 42" wide (42), 48" wide (48), 54" wide (54), 60" wide (60), 66" wide (66), 72" wide (72), 78" wide (78), 84" wide (84), or 96" wide (96) with painted standard top cap (P)

TR clear glass - 1/4" thick
5A opal etched - 1/4" thick
NN no glass- for customer's own glass

For 66" wide (66), 72" wide (72), 78" wide (78), 84" wide (84), or 96" wide (96) with painted architectural top cap (A)

TR clear glass - 1/4" thick [A]
5A opal etched - 1/4" thick [A]
NN no glass- for customer's own glass [A]
N3 no glass, for customer's own 3/8" thick glass [A]

Prices for Steps 1-6.

			24ATR	24A5A	24ANN	24AC3	24AG3	24AN3
FZ114.	22	20	$437	569	243	555	714	243
		24	$467	621	243	595	779	243
	29	13	$377	465	243	475	584	243
		17	$407	517	243	515	649	243

			24PTR	24P5A	24PNN	30ATR	30A5A	30ANN
FZ114.	22	20	$384	512	189	466	618	272
		24	$414	562	189	496	670	272
	29	13	$324	412	189	406	514	272
		17	$354	462	189	436	566	272

			30AC3	30AG3	30AN3	30PTR	30P5A	30PNN
FZ114.	22	20	$591	778	272	406	555	211
		24	$631	843	272	436	605	211
	29	13	$511	648	272	346	455	211
		17	$551	713	272	376	505	211

			36ATR	36A5A	36ANN	36AC3	36AG3	36AN3
FZ114.	22	20	$499	687	300	631	858	300
		24	$529	739	300	671	923	300
	29	13	$439	583	300	551	728	300
		17	$469	635	300	591	793	300

			36PTR	36P5A	36PNN	42ATR	42A5A	42ANN
FZ114.	22	20	$432	615	232	537	762	329
		24	$462	665	232	567	814	329
	29	13	$372	515	232	477	658	329
		17	$402	565	232	507	710	329

			42AC3	42AG3	42AN3	42PTR	42P5A	42PNN
FZ114.	22	20	$679	954	329	461	684	254
		24	$719	1019	329	491	734	254
	29	13	$599	824	329	401	584	254
		17	$639	889	329	431	634	254

			48ATR	48A5A	48ANN	48AC3	48AG3	48AN3
FZ114.	22	20	$576	857	368	727	1074	368
		24	$606	909	368	767	1139	368
	29	13	$516	753	368	647	944	368
		17	$546	805	368	687	1009	368

			48PTR	48P5A	48PNN	54ATR	54A5A	54ANN
FZ114.	22	20	$491	769	284	606	902	397
		24	$521	819	284	636	954	397
	29	13	$431	669	284	546	798	397
		17	$461	719	284	576	850	397

			54AC3	54AG3	54AN3	54PTR	54P5A	54PNN
FZ114.	22	20	$767	1130	397	515	809	306
		24	$807	1195	397	545	859	306
	29	13	$687	1000	397	455	709	306
		17	$727	1065	397	485	759	306

			60ATR	60A5A	60ANN	60AC3	60AG3	60AN3
FZ114.	22	20	$636	947	426	807	1186	426
		24	$666	999	426	847	1251	426
	29	13	$576	843	426	727	1056	426
		17	$606	895	426	767	1121	426

			60PTR	60P5A	60PNN	66ATR	66A5A	66ANN
FZ114.	22	20	$539	849	328	666	992	454
		24	$569	899	328	696	1044	454
	29	13	$479	749	328	606	888	454
		17	$509	799	328	636	940	454

			66AN3	66PTR	66P5A	66PNN	72ATR	72A5A
FZ114.	22	20	$454	563	889	344	696	1037
		24	$454	593	939	344	726	1089
	29	13	$454	503	789	344	636	933
		17	$454	533	839	344	666	985

			72ANN	72AN3	72PTR	72P5A	72PNN	78ATR
FZ114.	22	20	$483	483	587	929	354	726
		24	$483	483	617	979	354	756
	29	13	$483	483	527	829	354	666
		17	$483	483	557	879	354	696

			78A5A	78ANN	78AN3	78PTR	78P5A	78PNN
FZ114.	**22**	**20**	$1082	512	512	611	969	374
		24	$1134	512	512	641	1019	374
	29	**13**	$978	512	512	558	935	374
		17	$1030	512	512	581	982	374

			84ATR	84A5A	84ANN	84AN3	84PTR	84P5A
FZ114.	**22**	**20**	$756	1127	541	541	635	1020
		24	$786	1179	541	541	665	1070
	29	**13**	$696	1023	541	541	595	991
		17	$726	1075	541	541	620	1031

			84PNN	96ATR	96A5A	96ANN	96AN3	96PTR
FZ114.	**22**	**20**	$390	786	1172	560	560	710
		24	$390	816	1224	560	560	740
	29	**13**	$390	726	1068	560	560	675
		17	$390	756	1120	560	560	703

			96P5A	96PNN
FZ114.	**22**	**20**	$1090	418
		24	$1140	418
	29	**13**	$1051	418
		17	$1082	418

Step 7. Top Cap Finish

Metallic Paint		
CN	metallic champagne	+$0
EH	metallic bronze	+$0
MS	metallic silver	+$0

Sand Texture Paint		
8Q	folkstone grey	+$0
91	white	+$0
98	studio white	+$0
BK	black	+$0
CL	cool grey neutral	+$0
G1	graphite	+$0
WL	sandstone	+$0
WN	warm grey neutral	+$0

Laminate Screen, Frame Top FZ120.

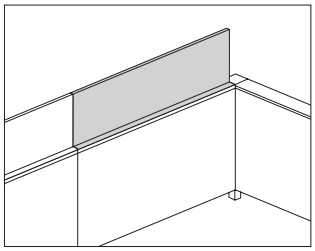

Product Information

Description

This laminate screen attaches to the top of the 22"-high or 29"-high Channel frame to extend the overall height and to provide boundary. Bayonets extend through the top cap for attachment, which allows the screen to sit cleanly on the top cap. Frame top cap and attachment hardware included.

Notes

Specify width of screen to match width of frame.

24"-72" wide screens must match width of Channel frame.

Dimensions

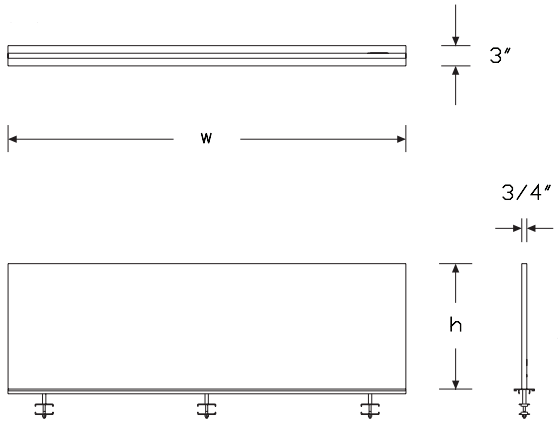

Specification Information

Step 1.

FZ120.

Step 2. For use with Frame Height

22 22" high
29 29" high

Step 3. Screen Height

For 22" high (22)

20 20" high
24 24" high

For 29" high (29)

13 13" high
17 17" high

Step 4. Width

24 24" wide
30 30" wide
36 36" wide
42 42" wide
48 48" wide
54 54" wide
60 60" wide
66 66" wide
72 72" wide

Step 5. Surface Material

L laminate/thermoplastic edge
U laminate/universal edge

Step 6. Top Cap Material

A painted architectural top cap
P painted standard top cap

Prices for Steps 1-6.

			24LA	24LP	24UA	24UP	30LA	30LP
FZ120.	**22**	**20**	$600	570	600	570	646	614
		24	$635	604	635	604	681	647
	29	**13**	$550	523	550	523	596	567
		17	$600	570	600	570	633	602

			30UA	30UP	36LA	36LP	36UA	36UP
FZ120.	**22**	**20**	$646	614	692	651	692	651
		24	$681	647	727	684	727	684

29	13	$596	567	616	580	616	580
	17	$633	602	666	627	666	627

		42LA	42LP	42UA	42UP	48LA	48LP
FZ120. 22	20	$738	694	738	694	784	730
	24	$773	727	773	727	819	762
29	13	$649	611	649	611	682	635
	17	$699	658	699	658	732	681

		48UA	48UP	54LA	54LP	54UA	54UP
FZ120. 22	20	$784	730	830	772	830	772
	24	$819	762	865	805	865	805
29	13	$682	635	715	665	715	665
	17	$732	681	765	712	765	712

		60LA	60LP	60UA	60UP	66LA	66LP
FZ120. 22	20	$875	814	875	814	895	833
	24	$911	848	911	848	931	866
29	13	$748	696	748	696	781	727
	17	$798	743	798	743	831	773

		66UA	66UP	72LA	72LP	72UA	72UP
FZ120. 22	20	$895	833	915	851	915	851
	24	$931	866	951	885	951	885
29	13	$781	727	814	758	814	758
	17	$831	773	864	804	864	804

Step 7. Grain Direction

For 24" wide (24), 30" wide (30), 36" wide (36), 42" wide (42), 48" wide (48), 54" wide (54), or 60" wide (60)

HRG	horizontal grain	+$0
VTG	vertical grain	+$0

For 66" wide (66) or 72" wide (72)

HRG	horizontal grain	+$0

Step 8. Top Cap Finish

Metallic Paint

CN	metallic champagne	+$0
EH	metallic bronze	+$0
MS	metallic silver	+$0

Sand Texture Paint

8Q	folkstone grey	+$0
91	white	+$0
98	studio white	+$0
BK	black	+$0
CL	cool grey neutral	+$0
G1	graphite	+$0
WL	sandstone	+$0
WN	warm grey neutral	+$0

Step 9. Surface Finish

76	light brown walnut	+$0
8Q	folkstone grey	+$0
91	white	+$0
98	studio white	+$0
CL	cool grey neutral	+$0
HM	natural maple	+$0
HP	light anigre	+$0
HX	aged cherry	+$0
HY	walnut on cherry	+$0
LA	light ash	+$0
LBA	clear on ash	+$0
LBB	oak on ash	+$0
LBC	walnut on ash	+$0
LBD	dark brown walnut	+$0
LBE	medium red walnut	+$0
LBF	neutral twill	+$0
LBG	sarum twill	+$0
LBH	earthen twill	+$0
LBJ	graphite twill	+$0
LBK	pewter mesh	+$0
LBL	steel mesh	+$0
LBM	crisp linen	+$0
LBN	classic linen	+$0
LBP	casual linen	+$0
LBQ	white twill	+$0
LU	soft white	+$0
WL	sandstone	+$0
WN	warm grey neutral	+$0

Step 10. Edge Finish

For laminate/thermoplastic edge (L)

76	light brown walnut	+$0
8Q	folkstone grey	+$0
91	white	+$0
98	studio white	+$0

Laminate Screen, Frame Top

continued

BU	black umber	+$0
CL	cool grey neutral	+$0
HF	inner tone light	+$0
HM	natural maple	+$0
HP	light anigre	+$0
HX	aged cherry	+$0
HY	walnut on cherry	+$0
LA	light ash	+$0
LBA	clear on ash	+$0
LBB	oak on ash	+$0
LBC	walnut on ash	+$0
LBD	dark brown walnut	+$0
LBE	medium red walnut	+$0
LBF	neutral twill	+$0
LBG	sarum twill	+$0
LBH	earthen twill	+$0
LBJ	graphite twill	+$0
LBK	pewter mesh	+$0
LBL	steel mesh	+$0
LBM	crisp linen	+$0
LBN	classic linen	+$0
LBP	casual linen	+$0
LBQ	white twill	+$0
LBR	phantom ecru	+$0
LBS	phantom cocoa	+$0
LBU	medium matte walnut	+$0
LBV	warm grey teak	+$0
LU	soft white	+$0
MT	medium tone	+$0
WL	sandstone	+$0
WN	warm grey neutral	+$0

For laminate/universal edge (U)

PLY	plywood edge	+$50

Index by Product Name

Canvas Office Landscape® Channel	
90° Connector Cover	page(s) 20
90° Connector Cover, Architectural	21
90° Connector Top Cap	29
90° Connector Top Cap, Architectural	31
90° Universal Connector	18
120° Connector Cover	22
120° Connector Top Cap	32
120° Universal Connector	19
Controlled Receptacle, 4-Circuit, 15 amp (package of 6)	51
Controlled Receptacle, 4-Circuit, 20 amp	54
Counterweight	7
Dual USB Charging Module, 2 Amp	55
Finished End	23
Finished End, Architectural	24
Flat Edge Screen, Frame Top	60
Frame	5
Frame-to-Frame Connection Hardware	17
Gallery Panel, Channel Attached	8
Glass Screen, Frame Top	64
Laminate Screen, Frame Top	67
Non-Structural Foot	13
Open Base Tile	34
Pari Screen, Frame Top	56
Power Entry - Ceiling	46
Power Entry, External Direct Connect	44
Power Entry, Internal Direct Connect - Floor	43
Power Entry, New York - Floor	45
Power Harness	47
Power Jumper	48
Receptacle, 4-Circuit, 15 amp (package of 6)	49
Receptacle, 4-Circuit, 20 amp	53
Structural Foot	15
Top Cap	25
Top Cap, Architectural	27
To-The-Floor Tiles	38

Index by Product Number

FW15U.	Dual USB Charging Module, 2 Amp	page(s) 55
FZ11A.	Top Cap, Architectural	27
FZ12A.	90° Connector Top Cap, Architectural	31
FZ12B.	90° Connector Cover, Architectural	21
FZ16A.	Finished End, Architectural	24
FZ19D.	Counterweight	7
FZ110.	Frame	5
FZ112.	Top Cap	25
FZ113.	Gallery Panel, Channel Attached	8
FZ114.	Glass Screen, Frame Top	64
FZ115.	Pari Screen, Frame Top	56
FZ116.	Flat Edge Screen, Frame Top	60
FZ117.	Non-Structural Foot	13
FZ119.	Structural Foot	15
FZ120.	Laminate Screen, Frame Top	67
FZ121.	90° Universal Connector	18
FZ123.	90° Connector Cover	20
FZ126.	90° Connector Top Cap	29
FZ128.	Frame-to-Frame Connection Hardware	17
FZ131.	120° Universal Connector	19
FZ133.	120° Connector Cover	22
FZ136.	120° Connector Top Cap	32
FZ140.	Power Entry, External Direct Connect	44
FZ141.	Power Entry, New York - Floor	45
FZ142.	Power Entry - Ceiling	46
FZ144.	Power Entry, Internal Direct Connect - Floor	43
FZ150.	Power Harness	47
FZ152M	Controlled Receptacle, 4-Circuit, 15 amp (package of 6)	51
FZ152.	Receptacle, 4-Circuit, 15 amp (package of 6)	49
FZ153M	Controlled Receptacle, 4-Circuit, 20 amp	54
FZ153.	Receptacle, 4-Circuit, 20 amp	53
FZ154.	Power Jumper	48
FZ160.	Finished End	23
FZ170.	Open Base Tile	34
FZ375.	To-The-Floor Tiles	38

20-Day or Less/Assigned Lead-Time Order Information

20-Day or Less and Assigned Lead-Time Programs

20-day or less and assigned lead-time products are designed for established Herman Miller dealers with pre-approved credit.

Products are distributed from multiple manufacturing facilities across the United States. All products and options not designated by an Assigned Lead-Time icon A will ship in 20 business days or less after being acknowledged by Herman Miller. Products and options designated by an A are on the assigned lead-time program and will ship in 20 days, less than 20 days, or more than 20 days from order acknowledgement.

Ordering Procedure

Please place orders through Order Manager. If this is not available to you, place orders through mail or fax. Verbal purchase orders will not be accepted.

Order Entry fax number for Passage®, 5000 Series, and Meridian® Filing and Storage: (616) 846 9236.

Order Entry fax number for all other products: (616) 654 3085.

For more information, contact your Customer Care representative at: (866) 854 3048 EXT 3400.

Shipments and Delivery

Per Herman Miller Terms and Conditions.

Changes and Cancellation

Per Herman Miller Terms and Conditions.

Stain-to-Match Program

Program Overview

The Stain-to-Match program gives you the option of using veneer finishes that are not listed in the standard offering. The program allows Herman Miller to match a customer's existing recut or natural veneer, or create a new finish that is unique to an installation.

Specific information on approval, ordering, pricing, and warranty for the Stain-to-Match program is listed below. Questions and requests for assistance may be directed to Herman Miller Options at:

(800) 654 3910

Ordering Products with Stain-to-Match Veneers

1. Fill out the Options Stain-to-Match Request Form and send along with a color sample (2" x 3" minimum) to the Herman Miller Options Applications Team at the address provided on the form. The form can be found on Omni.
2. Within 7-10 working days, Herman Miller Options will send a sample of the color-matched stain on Herman Miller veneer to the requester for the customer's signed approval.
3. If the sample meets the customer's approval, sign the reverse side of the sample, scan and email the approval to:
   options@hermanmiller.com.
4. After the stain has been approved, a formal quotation with special number and pricing can be provided, or the product can be specified through the Vary Easy program, if available. Work with the Options team on final product needs and how to specify.
5. A purchase order can then be placed.

Stain-to-Match Warranty

Herman Miller warrants its products to be free from defects in craftsmanship from the date of delivery for the applicable warranty period. Herman Miller is responsible for the physical properties of the veneers available through the Stain-to-Match program, which include:

STA: Stain-to-Match on Recut Ash
STB: Stain-to-Match on Beech
STC: Stain-to-Match on Cherry
STD: Stain-to-Match on Oak
STK: Stain-to-Match on Reltech Anigre (Geiger)
STM: Stain-to-Match on Recut Mahogany
STP: Stain-to-Match on Maple
STU: Stain-to-Match on Walnut (Geiger)

See your specification tool for product specific finish offering limitations.

Customer's Own Material Order Information — Workspaces

Customer's Own Material

Program Overview

The Customer's Own Material (COM) program gives you the option of using textiles other than those listed. Herman Miller will test textiles for application to Herman Miller products and will process orders for those with approved COM textiles only. COM textiles are on assigned lead times.

Omni lists an overview of fabrics that have been tested and indicates whether or not they were approved for application to Herman Miller products.

Specific information on the terms and conditions, testing, approval, and ordering process for COM is listed below. Questions about the COM program and requests for assistance may be directed to your COM representative at:
(616) 654 3400
(866) 854 3048 EXT 6543400

Customer's Own Material Warranty

Herman Miller does not warrant COM textiles. COM textiles are tested for application only; they are not tested for performance. The Herman Miller warranty does apply to the underlying products.

Suppliers of COM textiles are responsible for color consistency within commercial tolerances, UV stability, and resistance to soiling and perspiration.

Customer's Own Material Pricing

COM is a Category 1 fabric. There are no application charges for COM fabrics.

Ordering and payment for COM textile yardage are the responsibility of the customer and the textile supplier.

If desired, Herman Miller will purchase COM textiles directly from True Textiles, C.F. Stinson, Luna Textiles, Maharam, and Momentum Textiles to simplify ordering and shipment. For this service, refer to the Supplier Connection program.

Application Note

Herman Miller does not guarantee that Customer's Own Material (COM) fabric patterns will align across panels/tiles or from one screen to the next. We also do not guarantee that COM fabric designs will be positioned consistently in the same location across several panels, tiles, or screens.

COM is not available on panels.

Textile Approval

1. Select a COM textile and a Herman Miller product.
2. If your textile is not listed in Omni, obtain a test number from a COM representative at (616) 654 3400. You can also submit your request within Omni. Please have the following information ready before calling: textile name, number, pattern, and the product you will apply it to.
3. Herman Miller will notify you of approval or disapproval within 4 days from receipt of the test yardage.

Ordering Products with COM

1. Refer to the specific products to determine the yardage required for COM textiles.
2. If your textile is not listed in Omni, call a COM representative at (616) 654 3400 or (866) 854 3048 EXT 6543400. The representative will assign an identification number for your textile (ID#) and will verify yardage requirements for your order.
   Note: Yardage requirements are based on nondirectional, 54"-wide textiles. 66"-wide textiles are needed for application on 60"-wide products. Additional yardage may be needed due to the unique characteristics of a textile.
3. Enter your order on Order Manager in Omni.
4. Upon receipt of your purchase order, Herman Miller will send you a PO acknowledgment.
5. Arrangements must be made for the textiles to be shipped from the supplier to Herman Miller for application to the Herman Miller products. Textiles must be tagged with the assigned identification number and the roll yardage quantity. See Omni for shipping procedures and current shipping addresses or contact a COM representative at (616) 654 3400 or (866) 854 3048 EXT 6543400.

   Products will be scheduled for production when COM textiles are received at Herman Miller. Standard lead times in effect at that time will apply.

   Note: If textiles are to be purchased directly by Herman Miller through the Supplier Connection program, Herman Miller will handle the ordering and shipping process and will schedule your order for production upon receipt of your purchase order (dependent on textile availability). Refer to the Supplier Connection program for more information.

Supplier Connection

Program Overview

The Supplier Connection program is a service offered by Herman Miller to purchase approved COM textiles directly from True Textiles, C.F. Stinson, Luna Textiles, Maharam, and Momentum Textiles. When you select a textile through this program, Herman Miller will facilitate the ordering, scheduling, and shipment of the textile directly with the supplier.

Suppliers included in the Supplier Connection program keep an active inventory of textiles that are pre-approved for application to Herman Miller products. Pre-approval applies only to the suitability of a textile for manufacturing and application to a Herman Miller product. Omni provides an overview of fabrics that have been tested and indicates whether or not they were approved for application to Herman Miller products.

Specific information on the terms and conditions, testing, approval, and ordering process for the Supplier Connection program is listed below. Questions and requests for assistance may be directed to your COM representative at:
(616) 654 3400
(866) 854 3048 EXT 6543400

Supplier Connection Warranty

Textiles purchased by Herman Miller through the Supplier Connection program are COM and are not warranted by Herman Miller. COM textiles are tested for application only; they are not tested for performance. The Herman Miller warranty does apply to the underlying products.

Suppliers of COM textiles are responsible for color consistency within commercial tolerances, UV stability, and resistance to soiling and perspiration.

Supplier Connection Pricing

Textiles purchased by Herman Miller through the Supplier Connection program are COM. COM is a Category 1 fabric. There are no application charges for COM fabrics.

Payment for textiles purchased by Herman Miller through the Supplier Connection program is the responsibility of the customer or dealer. Herman Miller will invoice the order at the supplier's prices published at the time of the order.

Customer's Own Material Order Information — Workspaces

continued

Textile Approval

1. Refer to Omni to identify the approval status of the textile. If your textile is not listed, contact the COM Department to request testing for application to Herman Miller products.
2. Herman Miller will notify you of approval or disapproval in approximately 4 days from receipt of the test yardage. If the textile is approved, it will be assigned a COM identification number.

Ordering Products with Supplier Connection COM

1. Identify and include the following information on your purchase order:
   - Product number and option
   - Herman Miller's COM identification number
2. Enter your order on Order Manager in Omni.
3. Upon receipt of the purchase order, Herman Miller will process your order and send you a PO acknowledgment. Herman Miller will determine the yardage required to produce your product and will order and schedule for delivery the required textile. Standard lead times in effect at the time the textile is allocated at the supplier will apply to products ordered through this program.

Proprietary Textiles Application Chart — Workspaces

• *Available*

A *Assigned lead-time textile.*

See following page for exception notes.

	Action Office® Panels/Connectors	Action Office/Ethospace® B-Style Storage	Action Office B-Style Tackboards	Action Office/Ethospace E-Style Storage	Ethospace Tiles/Connectors	Ethospace Work Surface-Attached Screens	Ethospace/Canvas Office Landscape® Privacy Doors	Canvas Tiles/Extended Width Tiles	Canvas B-/E-Style Storage	Canvas Standing Screen and Team Wall Infill	Canvas Tackboards	Canvas Vista™ Movable Insert and Display Unit	Layout Studio® Framed Screen	Locale® Display Tackboard	Locale Freestanding Screen and Workbase Screen	Locale L-Desk/D-Desk Screens	Pari™ Screens/Flat Edge Screens	Public Office Landscape® Screen/Desk Top Divider	Renew™ Link Screens	Resolve® Boundary Screens/Flags	Resolve Display Screens	Resolve Rolling Screens/Canopies	Exclave® Tackable Boards and Stowage Tackable Backdrop	Exclave Video-Friendly Tackable Boards and Stowage Tackable Backdrop	Thrive® Personal Side Screen	Tu® Wood Storage Cubby Tackboard	Seating
Price Category 1																											
COM Customer's Own Material A	1	1	1	1	1		1	1	1	1	•		1	1	1		1	1	1	1					1		1
8A_ _ Bubbletack™																					•						
2V_ _ Chain	•	•	•	•	•		•	22	•	•	•	•	•	•	•		•	•	•						•	•	
8T_ _ Crossing (85_ _)	2	2	2	•	•		•	•	2	•	•		•		•	•	•	•	•				•	8	•	•	18
95_ _ Gem	2	2	2	•	•		•	•	2	•	•		•	•		•									•	•	•
2I_ _ Grasscloth	•	•	•	•	•		•	•	•	•	•	•		•	•		•	•	•						•	•	
1MN_ _Monologue	2	2	2	•	•		•	•	2	•	•	•	•	•	•	•	•	•	•						•	•	•
8B_ _ Multiscrim™						•														•		•					
5T_ _ Resonance	•	•	•	•	•		•	•	•	•	•	•	•	•											•	•	
8C_ _ Scrim Trim																						•					
2M_ _ Silkworm	•	•	•	•	•		•	•	•	•	•	•	•	•											•	•	
22F_ _ Slant	6		•		•		•	•		•	•	•	•	•												•	
Price Category 2																											
51_ _ Cord	•	•	•	•	•		•	•	•	•	•	•	•	•												•	
92_ _ Crepe	2	•	•	•	•		•	•	•	•	•	•	•	•									•	8	•		•
57_ _ Frost	•	•	•	•	•		•	•	•	•	•	•	•	•	•		•	•	•						•	•	
84_ _ Grosgrain	4			•	•		•	8	•	•	•	•	•												19	•	
4N_ _ Horizon	2	2	2	•	•		•	•	•	•	•	•	•	•												•	
1LM_ _ Loom	2	2	2	•	•		•	•	•		•		•	•	•		•	•	•				•		•		•
1HA_ _ Medley	2	2	2	•	•		•	•	•	•	•	•	•	•	•	•	•	•	•				•	8	•		•
3A_ _ Moiré		2	2	•	•		•	22	2	•	•	•	•	•	•		•	•	•						•	•	•
3SL_ _ Sequel		G2		G2	G2				G2																		
8R_ _ Twist (5S_ _)	5	2	2	•	•		•	•	2	•	•	•	•		•	•	•	•	•						•	•	18
Price Category 3																											
70_ _ Bento	2	2	2	•			•	•	2	•	•	•		•	•		•	•	•						•	•	•
1FB _ Connection	•	•	•	•	•		•	•	•	•	•	•	•	•	•										•	•	
1FC _ Current	•	•	•	•	•		•	•	•	•	•	•	•	•	•			•							•	•	
8Z_ _ Glaze	•	•	•	•	•		•	•	•	•	•	•	•	•											•	•	
47_ _ Ground Cloth®	•	•	•	•	•		•	•	•	•	•	•	•		•		•	•	•	14			•	8	•	•	
5D_ _ Kira 2	2	2	2	•	•		•	•	2	•	•	•	•	•	•		•	•	•	14					•	•	
8L_ _ Savannah	•	20	•	•	•		•	•	•	•	•	•	•	•						14						•	
8W_ _ Strands	•	•	•	•	•		•	•	•	•	•		•	•	•		•	•	•						•	•	

continued on next page

Proprietary Textiles Application Chart — Workspaces

continued

	Action Office® Panels/Connectors	Action Office/Ethospace® B-Style Storage	Action Office B-Style Tackboards	Action Office/Ethospace E-Style Storage	Ethospace Tiles/Connectors	Ethospace Work Surface-Attached Screens	Ethospace/Canvas Office Landscape® Privacy Doors	Canvas Tiles/Extended Width Tiles	Canvas B-/E-Style Storage	Canvas Standing Screen and Team Wall Infill	Canvas Tackboards	Canvas Vista™ Movable Insert and Display Unit	Layout Studio® Framed Screen	Locale® Display Tackboard	Locale Freestanding Screen and Workbase Screen	Locale L-Desk/D-Desk Screens	Pari™ Screens/Flat Edge Screens	Public Office Landscape® Screen/Desk Top Divider	Renew™ Link Screens	Resolve® Boundary Screens/Flags	Resolve Display Screens	Resolve Rolling Screens/Canopies	Exclave® Tackable Boards and Stowage Tackable Backdrop	Exclave Video-Friendly Tackable Boards and Stowage Tackable Backdrop	Thrive® Personal Side Screen	Tu® Wood Storage Cubby Tackboard	Seating
Price Category 4																											
2X_ _ Glisten	•	•	•	•	•		•	•	•	•	•	•	•	•					•							•	
6S_ _ Quilty	2	2	2	•	•		•	•	2	•			•	•													•
Price Category 5																											
No fabrics available at this time.																											
Price Category 6																											
No fabrics available at this time.																											

G2 *Sequel fabric only available on flipper doors.*

1 *Refer to price book appendices and Kiosk for COM information. COM not available on panels.*

2 *Available on all products except 54" and 60" wide.*

4 *Not available on Action Office (AO®) acoustical panels.*

5 *(8R_ _), (8T_ _), (85_ _), and (5S_ _) not available on AO acoustical panels and not available on 54"- or 60"-wide products.*

6 *Not available on Action Office (AO®) connectors, cable management, and spacers.*

8 *Available in select colors. See the "Proprietary Textile Colors — Seating" appendix.*

14 *Not available on Resolve flags.*

15 *Fabric is railroaded for all widths, except on Passage full-height screens.*

16 *Not available on Passage full-height screens. Fabric is railroaded for all widths.*

18 *Available on seating products in select colors. See the "Proprietary Textile Colors — Seating" appendix.*

19 *Not available in Grosgrain (84_ _) fabric colors 8401, 8405, and 8413.*

20 *Available only on Ethospace B-Style.*

22 *Not available as railroaded application option for Chain and Moire on Canvas extended width tiles.*

Application Note: Herman Miller cannot guarantee material/pattern alignment in adjacent products. For example, a fabric's pattern may not align from one screen to the next, or from one panel to the next.

Price Category 1

Customer's Own Material
See Order Information in Appendices.
Assigned lead-time textile. A

Bubbletack™	
100% polyester	
8A01	Seashell White
8A02	Pearl Grey
8A19	Spa Blue
8A24	Sable Grey
8A27	Summer White
8A28	Moth Grey
8A30	Blue Grey
8A31	Dusty Bronze
8A32	Slate Blue
8A35	Studio White
8A36	Blush Grey
8A37	Shale
8A38	Slate
8A39	Eggnog
8A40	Persimmon
8A41	Bud

Chain	
66” wide	
100% recycled polyester	
2V01	Pearl
2V02	Oyster
2V03	Wheat
2V04	Linen
2V05	Wicker
2V06	Bamboo
2V07	Sage
2V08	Spring Wood
2V09	Iceberg

Crossing	
54” wide	
86% antimony-free polyester	
14% polyester	
8T03	Wicker *
8T04	Porcelain *
8T05	Warm Grey *
8T06	Sepia
8T07	Pumpkin
8T08	Copper
8T09	Cranberry
8T10	Tomato
8T11	Mulberry
8T12	Plum
8T13	Green Apple
8T14	Loden
8T15	Spruce
8T16	Periwinkle
8T17	Cerulean
8T18	Indigo
8T19	Shale *
8T20	Brownstone
8T21	Bark
8T22	Tin *
8T23	Graphite
8T24	Black

Crossing	
For systems products only.	
54” wide	
86% antimony-free polyester	
14% polyester	
8501	Ivory *
8502	Oyster *

* Crossing colors available on Exclave® Video-friendly Tackable Boards and Stowage Tackable Backdrop

Gem	
54” wide	
100% antimony-free polyester	
9502	Tangerine
9503	Red
9507	Twilight
9508	Bayou
9510	Berry Blue
9511	Aqua Green
9512	Green Apple
9514	Black
9515	Slate Grey
9516	Fog

Grasscloth	
66” wide	
100% recycled polyester	
2I01	Silver Birch
2I02	Pampas
2I03	Sedge
2I07	Lea
2I08	Taro
2I09	Steam Grey
2I10	Cayenne
2I11	Bottle Green
2I12	Surf
2I13	Gravel

Monologue	
54” wide	
56% recycled polyester	
44% polyester	
1MN01	Linen
1MN02	Alabaster
1MN03	Truffle
1MN04	Folkstone
1MN05	Silver Pine
1MN06	Slate
1MN07	Seed
1MN08	Yellow Oxide
1MN09	Persimmon
1MN10	Tundra
1MN11	Meadow
1MN12	Blue Sky
1MN13	Blue Spruce
1MN14	Deep Sea

Multiscrim™	
60” wide	
100% polyester	
8B01	Seashell White
8B02	Pearl Grey
8B19	Spa Blue
8B24	Sable Grey
8B27	Summer White
8B28	Moth Grey
8B30	Blue Grey
8B31	Dusty Bronze
8B32	Slate Blue
8B35	Studio White
8B36	Blush Grey
8B37	Shale
8B38	Slate
8B39	Eggnog
8B40	Persimmon
8B41	Bud

Price category 1 continued on next page

Price Category 1
continued

Resonance	
66” wide	
100% polyester	
5T04	Greige
5T05	Porcelain
5T06	Alabaster
5T15	Iris
5T28	Sugar
5T47	Tobacco
5T54	Saltbush
5T57	Seed
5T58	Sepia
5T60	Iceberg
5T65	Red
5T67	Boysenberry
5T68	Pistachio
5T69	Green Apple
5T71	Jade
5T72	Blue Green
5T74	Twilight

Scrim Trim	
61” wide	
82% polyester	
18% spandex	
8C01	Seashell White
8C02	Pearl Grey
8C22	Winter Grey
8C24	Sable Grey

Silkworm	
66” wide	
58% recycled polyester	
42% polyester	
2M01	Cocoon
2M02	Pongee
2M03	Saffron
2M04	Tussah
2M05	Ceylon
2M06	Jasmine
2M07	Shale
2M08	Monsoon

Slant	
66” wide	
51% polyester	
49% recycled polyester	
22F04	Pesto
22F06	Neptune
22F07	Blueberry
22F10	Pumpkin
22F12	Silver Birch
22F13	Bluestone
22F15	Shale

Price Category 2

Cord	
66” wide	
51% antimony-free polyester	
49% polyester	
5101	Ivory
5102	White Ash
5103	Linen
5104	Bamboo
5105	Sepia
5106	Wicker
5107	Sesame
5108	Kiwi Green
5109	Bayou
5110	Shade
5111	Spring Wood
5112	Summer White

Crepe	
54” wide	
100% recycled polyester	
9201	Licorice
9203	Smoke
9207	Cherry
9209	Claret
9212	Raisin
9218	Aquamarine
9223	Cadet
9241	Beachglass
9243	Midnight
9244	Artichoke
9248	Warm White *
9249	Stone *
9250	Earth
9251	Fog *
9252	Slate Grey
9253	Yellow Dark
9254	Coral
9255	Blush Grey *
9256	Wild Berry
9257	Clover
9258	Caribbean
9259	Cerulean
9260	Brownstone
9261	Shale
9262	Graphite
9263	Tomato
9264	Green Apple

* Crepe colors available on Exclave® Video-friendly Tackable Boards and Stowage Tackable Backdrop

Price category 2 continued on next page

Price Category 2
continued

Frost	
66” wide	
100% recycled polyester	
5703	Porcelain
5704	Honey
5705	Iceberg
5706	Sage
5710	Sable Grey

Grosgrain	
66” wide	
100% recycled polyester	
8401	Pearl * **
8402	White Ash
8403	Warm Grey
8404	Khaki
8405	Oyster *
8406	Celadon
8407	Chamois
8408	Spa Blue
8409	Bud
8410	Kiwi Green
8411	Bayou
8412	Tin
8413	Iceberg *

* Grosgrain colors not available on Canvas Dock Mounted Screens, Locale® Workbase Screen, Public Office Landscape® Screen/Desk Top Divider, and Thrive® Personal Side Screen.
** Color not available on Canvas tiles.

Horizon	
54” wide	
65% antimony-free polyester	
35% polyester	
4N01	Rye Grass
4N02	Sugar Pine
4N03	Silver Pine
4N04	White Ash
4N05	Spring Wood

Horizon *continued*	
4N06	Tamarack
4N07	Mushroom
4N08	Haystack
4N09	Oat Grass
4N10	Forest Moss
4N11	Hickory
4N12	Beech Nut
4N13	Pine Cone
4N14	Poplar
4N15	Elderberry

Loom	
54” wide	
100% polyester	
1LM01	Linen
1LM02	Brown Sugar and Spice
1LM03	Brick and Mortar
1LM04	Salt and Pepper
1LM05	Black
1LM06	Lemongrass
1LM07	Poppy
1LM08	Wild Berry
1LM09	Loden
1LM10	Jade
1LM11	Deep Sea

Medley	
54” wide	
100% polyester	
1HA01	Stone *
1HA02	Trail
1HA03	Charcoal
1HA04	Cinder
1HA05	Citrus
1HA06	Papaya
1HA07	Chutney
1HA08	Tundra
1HA09	Feather Grey *
1HA10	Chartreuse
1HA11	Loden
1HA12	Peacock
1HA13	Bayou *
1HA14	Blue Grotto
1HA15	Blueberry

Medley *continued*	
1HA22	Khaki
1HA23	Pewter
1HA24	Yellow Oxide
1HA25	Vintage Rose
1HA26	Raspberry
1HA27	Acai Berry

* Colors available on Exclave® Stowage Video-friendly Tackable Backdrop

Moiré	
54” wide	
100% recycled polyester	
3A01	Concrete
3A02	Biscotti
3A03	Rattan
3A04	Chambray
3A05	Fern
3A08	Violet
3A09	Zin
3A10	Curry
3A11	Spice
3A12	Cork

Sequel	
54” wide	
100% vinyl	
100% polyester knit backing	
Resilience® finish	
3SL01	White
3SL02	Pebble
3SL03	Mushroom
3SL04	Stone
3SL05	Chestnut
3SL06	Rattan
3SL07	Black Cherry
3SL08	Tundra
3SL09	Seal
3SL10	Blue Fog
3SL11	Folkstone
3SL12	Shale
3SL13	Slate Grey
3SL14	Charcoal
3SL15	Carbon Dark

Twist	
54” wide	
80% antimony-free polyester	
13% recycled polyester	
7% polyester	
8R05	Wicker
8R10	Poppy
8R14	Tin
8R15	Shale
8R16	Graphite
8R17	Birch
8R18	Sepia
8R22	Blueberry
8R23	Green Apple
8R26	Gunmetal
8R27	Cinder
8R28	Citrus
8R29	Pekoe
8R30	Tangerine
8R31	Red Plum
8R32	Wisteria
8R33	Forest
8R34	Jade Dark
8R35	Waterfall
8R36	Midnight Blue
8R37	Carbon Dark

Twist	
For systems products only.	
54” wide	
80% antimony-free polyester	
13% recycled polyester	
7% polyester	
5S01	Pearl
5S02	Ivory
5S03	Oyster

Price Category 3

Bento	
54” wide	
100% antimony-free polyester	
7001	Frost
7002	Linen
7003	Khaki
7004	Truffle
7005	Grey Black
7006	Pumpkin
7007	Cranberry
7008	Everglade
7009	Cobalt

Connection	
66” wide	
100% antimony-free polyester	
1FB1	Oyster
1FB2	Linen
1FB3	Iceberg
1FB4	Silver Pine
1FB5	Apricot
1FB6	Cumin
1FB7	Green Apple
1FB8	Slate Blue
1FB9	Metal

Current	
66” wide	
100% antimony-free polyester	
1FC1	Oyster
1FC2	Linen
1FC3	Iceberg
1FC4	Silver Pine
1FC5	Apricot
1FC6	Cumin
1FC7	Green Apple
1FC8	Slate Blue
1FC9	Metal

Glaze	
66” wide	
100% recycled polyester	
8Z01	Wicker
8Z02	Honey
8Z03	Porcelain
8Z04	Celadon
8Z05	Spearmint
8Z06	Rye
8Z07	Frost
8Z08	Silver Birch

Ground Cloth®	
66” wide	
100% polyester	
4701	Vapor Grey
4721	Warm White *
4722	Fog *
4723	Straw *
4724	Red Orange *
4725	Wild Berry *
4726	Green Apple *
4727	Caribbean *
4728	Midnight *
4729	Cappuccino *

* Colors available on Exclave® Video-friendly Tackable Boards and Stowage Tackable Backdrop

Kira 2	
54” wide	
100% recycled polyester	
5D11	Flaxen
5D12	Papyrus
5D13	Oasis
5D14	Incense
5D15	Ash
5D16	Falcon

Savannah	
66” wide	
76% recycled polyester	
24% polypropylene	
8L01	Pearl
8L02	Oyster
8L03	Wheat
8L04	Jute
8L05	Bamboo
8L06	Metal
8L07	Linen
8L08	Celadon
8L09	Moss
8L10	Frost
8L11	Shale
8L12	Pewter

Strands	
66” wide	
100% recycled polyester	
8W01	Pebble
8W02	Porcelain
8W03	Taupe
8W04	Honey
8W05	Khaki
8W06	Rye
8W07	Wicker
8W08	Tin
8W09	Cool Grey

Proprietary Textile Colors — Workspaces

continued

Price Category 4

Glisten	
66” wide	
84% polyester	
16% recycled polyester	
2X02	Rye
2X05	Iceberg
2X07	Celadon
2X09	Pewter
2X10	Ash

Quilty	
56” wide	
100% antimony-free polyester	
GreenShield	
6S03	Khaki
6S04	Straw
6S07	Brick
6S10	Mink
6S11	Green Apple
6S13	Indigo
6S14	Zinc
6S15	Slate
6S16	Beachwood
6S17	Paprika
6S18	Plum
6S19	Juniper
6S20	Grey Black

Price Category 5-6

No fabrics available at this time.

Maharam Application Chart — Workspaces

•*Available*
Maharam textiles are on assigned lead times. A
See below for exception notes.

	Action Office® Panels/Connectors	Action Office/Ethospace® B-Style Flipper Doors	Action Office/Ethospace B-Style Tackboards	Action Office/Ethospace E-Style Flipper Doors	Ethospace Tiles/Connectors	Ethospace/Canvas Office Landscape® Privacy Doors	Canvas Tiles/Extended Width Tiles/Channel Tiles	Canvas B-/E-Style Flipper Doors	Canvas Tackboards	Canvas Metal Desk Hutch Back Panel	Canvas Vista™ Movable Insert and Display Unit
Price Category 1-2											
No fabrics available at this time.											
Price Category 3											
No fabrics available at this time.											
Price Category 4-9											
No fabrics available at this time.											
Price Category A											
No fabrics available at this time.											
Price Category B											
VQ_ _ Crisp - Maharam	5	•	•	•	12		•	•	•	•	•
TL_ _ Messenger - Maharam *		2	2	•	12	•	•	2	•	•	•
Price Category C											
Z27_ _ Manner - Maharam	2	2	2	2	•		•	2	•	•	•
Z3_ _ Metric - Maharam	2		2			•	•		•	•	•
TT_ _ Parallel - Maharam	7	•	•		•	•	•	18	•	•	•
Price Category D											
Z34_ _ Unit - Maharam	•						•		•	•	•
Price Category E											
Z32_ _ Skein - Maharam	2	2	2	2	•		•	2	•	•	•
Price Category F-K											
No fabrics available at this time.											

** Available in select colors on 20-day lead-time.*
Refer to "Maharam Colors - Workspaces" for 20-day colors.

2 *Available on all products except 54" and 60" wide.*
5 *Not available on AO partial-glazed panels.*
7 *Not available on AO or Prospects acoustical panels; not available on AO2 cable management panel face.*
12 *Not available on Ethospace tackable tiles.*
18 *Not available on Canvas E-style flipper doors.*

Application Note: Herman Miller cannot guarantee material/pattern alignment in adjacent products. For example, a fabric's pattern may not align from one screen to the next, or from one panel to the next.

Maharam Colors — Workspaces

Price Category 1-2	Price Category 3	Price Category 4-9	Price Category A
No fabrics available at this time.	No fabrics available at this time.	No fabrics available at this time.	No fabrics available at this time.

- Maharam textiles are on assigned lead times. A
- Fabric numbers are listed as Herman Miller fabric number/Maharam fabric number.

Price Category B

Crisp – Maharam	
66” wide	
100% polyester	
VQ02/901420-002	Oyster
VQ04/901420-004	Driftwood
VQ05/901420-005	Quahaug
VQ13/901420-013	Admiral
VQ14/901420-014	Thunder
VQ21/901420-021	Graphite
VQ22/901420-022	Lychee
VQ23/901420-023	Persimmon
VQ24/901420-024	Kimchi
VQ25/901420-025	Marigold
VQ26/901420-026	Brut
VQ27/901420-027	Chartreuse
VQ28/901420-028	Celadon
VQ29/901420-029	Surf
VQ30/901420-030	Marble
VQ31/901420-031	Boulder
VQ32/901420-032	Bell
VQ33/901420-033	Ferry
VQ34/901420-034	Sapphire
VQ35/901420-035	Carbon
VQ36/901420-036	Owl
VQ37/901420-037	Agate

Messenger — Maharam	
54” wide	
78% recycled polyester	
15% polyester	
7% nylon	
TI07/458640-007	Shadow
TI08/458640-008	Bayou *
TI24/458640-024	Poppy
TI25/458640-025	Mao
TI29/458640-029	Onyx *
TI31/458640-031	Cloud *
TI38/458640-038	Depth *
TI40/458640-040	Nile *
TI41/458640-041	Azure *
TI45/458640-045	Cactus *

Messenger *continued*	
TI46/458640-046	Ice *
TI48/458640-048	Neon
TI50/458640-050	Hydrangea
TI53/458640-053	Tangelo
TI54/458640-054	Lumine *
TI58/458640-058	Snow
TI60/458640-060	Peridot
TI61/458640-061	Capri *
TI62/458640-062	Ultramarine
TI63/458640-063	Squall
TI66/458640-066	Cassis
TI67/458640-067	Aster
TI69/458640-069	Cherry
TI70/458640-070	Vibrant
TI71/458640-071	Satsuma *
TI72/458640-072	Maize
TI76/458640-076	Fossil
TI77/458640-077	Ash
TI78/458640-078	Tusk
TI79/458640-079	Oyster
TI81/458640-081	Husk
TI84/458640-084	Robust
TI85/458640-085	Beyond
TI86/458640-086	Voyage *
TI87/458640-087	Everglade
TI89/458640-089	Blanch
TI90/458640-090	Longspur
TI91/458640-091	Vireo
TI92/458640-092	Dipper
TI93/458640-093	Gale
TI94/458640-094	Hunter
TI95/458640-095	Lime
TI96/458640-096	Apple
TI97/458640-097	Krill
TI98/458640-098	Catalyst

* Colors available on 20-day lead time.

Price Category C

Manner - Maharam	
54” wide	
100% recycled polyester	
Z2701/466177-001	Magic
Z2702/466177-002	Carob
Z2703/466177-003	Porpoise
Z2704/466177-004	Flint
Z2705/466177-005	Hush
Z2706/466177-006	Nuance
Z2711/466177-011	Ember
Z2712/466177-012	Wagon
Z2713/466177-013	Ablaze
Z2714/466177-014	Peel
Z2716/466177-016	Butterscotch
Z2717/466177-017	Harvest
Z2720/466177-020	Parakeet
Z2722/466177-022	Aquatic
Z2723/466177-023	Cottage
Z2724/466177-024	Dahlia
Z2725/466177-025	Vivid
Z2726/466177-026	Basin
Z2727/466177-027	Schooner
Z2728/466177-028	Slope
Z2729/466177-029	Silverpoint
Z2730/466177-030	Lattice
Z2731/466177-031	Smoky
Z2732/466177-032	Magnetic
Z2733/466177-033	Woad
Z2734/466177-034	Resolute
Z2735/466177-035	Cruise
Z2736/466177-036	Atmospheric
Z2737/466177-037	Cloudburst
Z2738/466177-038	Tidewater
Z2739/466177-039	Firth
Z2740/466177-040	Oceanside
Z2741/466177-041	Grandeur
Z2742/466177-042	Comfort
Z2743/466177-043	Dill
Z2744/466177-044	Poplar
Z2745/466177-045	Citronella
Z2746/466177-046	Passerine

Manner *continued*	
Z2747/466177-047	Southwest
Z2748/466177-048	Roseate
Z2749/466177-049	Charisma
Z2750/466177-050	Siltstone
Z2751/466177-051	Kimono
Z2752/466177-052	Valiant
Z2753/466177-053	Baroness

Metric – Maharam	
54” wide	
51% recycled polyester	
49% polyester	
Z302/466014-002	Fog
Z303/466014-003	Fleece
Z312/466014-012	Cardinal
Z313/466014-013	Lava
Z318/466014-018	Pollen
Z320/466014-020	Alligator
Z323/466014-023	Tar
Z324/466014-024	Anchor
Z326/466014-026	Admiral
Z327/466014-027	Seaport
Z328/466014-028	Scuba
Z329/466014-029	Skate
Z330/466014-030	Hopscotch
Z331/466014-031	Film
Z332/466014-032	Whale
Z333/466014-033	Downpour
Z334/466014-034	Midday
Z335/466014-035	Talisman
Z336/466014-036	Hedgerow
Z337/466014-037	Snorkel
Z338/466014-038	Highway
Z339/466014-039	Canary
Z340/466014-040	Sunny
Z341/466014-041	Aztec
Z342/466014-042	Fruit
Z343/466014-043	Galah
Z344/466014-044	Kiln
Z345/466014-045	Moth

- Maharam textiles are on assigned lead times. A
- Fabric numbers are listed as Herman Miller fabric number/Maharam fabric number.

Maharam Colors — Workspaces

continued

Price Category C
continued

Parallel — Maharam	
66” wide	
100% recycled polyester	
TT01/901180-001	Chalk
TT02/901180-002	Argent
TT03/901180-003	Fog
TT17/901180-017	Sourdough
TT22/901180-022	Sterling
TT23/901180-023	Linen
TT24/901180-024	Pea
TT27/901180-027	Boulder
TT28/901180-028	Stream
TT29/901180-029	Shiitake
TT30/901180-030	Wafer
TT31/901180-031	Plank
TT32/901180-032	Brandy
TT33/901180-033	Crater
TT36/901180-036	Quail

Price Category D

Unit - Maharam	
66” wide	
100% recycled polyester	
Z3401/901889-001	Seawall
Z3402/901889-002	Limestone
Z3403/901889-003	Aluminum
Z3404/901889-004	Snow
Z3405/901889-005	Tusk
Z3406/901889-006	Nautilus
Z3407/901889-007	Beech
Z3408/901889-008	Driftwood
Z3409/901889-009	Cocoa

Price Category E

Skein - Maharam	
54” wide	
56% recycled polyester	
44% polyester	
Z3201/466170-001	Burrow
Z3202/466170-002	Thatch
Z3204/466170-004	Sumac
Z3205/466170-005	Pomegranate
Z3206/466170-006	Cavern
Z3208/466170-008	Cinder
Z3209/466170-009	Dock
Z3210/466170-010	Cadet
Z3211/466170-011	Marsh

Price Category F-K

No fabrics available at this time.

- Maharam textiles are on assigned lead times. A
- Fabric numbers are listed as Herman Miller fabric number/Maharam fabric number.

For more information about our products and services or to see a list of dealers, please visit us at HermanMiller.com or call (800) 851 1196.

© 2019 Herman Miller, Inc., Zeeland, Michigan

Distribution Rights

Working together since 1956, Herman Miller and Vitra are the authentic sources of designs by Charles and Ray Eames, Alexander Girard, and George Nelson. All the designs shown in this book are protected by law. Herman Miller has obtained all rights to make and sell these designs. Also, Herman Miller holds exclusive worldwide manufacturing and distribution rights for these products with the following exceptions:

Charles and Ray Eames, George Nelson, and Alexander Girard—Worldwide distribution rights for furniture in all areas except Europe and the Middle East. For those areas, please contact Vitra.

Isamu Noguchi—Worldwide distribution rights for the Noguchi Rudder Table. Distribution rights for the Noguchi Table in North America and Central America only. For all other areas, please contact Vitra.

Magis—Exclusive distribution rights in the US and Canada. For all other areas, please contact Magis.

Mattiazzi—Exclusive distribution rights in the US and Canada. For all other areas, please contact Mattiazzi.

® HermanMiller, ☻, Action Office, Aeron, Aside, Avive, Canvas Office Landscape, Caper, Celle, Co/Struc, Eames, Embody, Equa 2, Ergon 3, Ethospace, Exclave, Fine-Tune, FlexFront, Formcoat, Ground Cloth, Herman Miller Healthcare, Layout Studio, Maharam, Meridian, Mirra, Passage, Pellicle, Perspectives, PostureFit, Quadrant, Resolve, Sayl, Setu, Thrive, Tu, Y-Tower, and Z-Axis are among the registered trademarks of Herman Miller, Inc., and its owned subsidiaries.

™ AireWeave, Bubbletack, Cellular Suspension, Compass, Connect, Cosm, DOT, Durawrap, Everywhere, Flex-Edge, Hopsak 2, Intent, Iota, Keyless Entry, Latitude, Lino, Lyris 2, Mora, Motia, Multiscrim, Nelson, Nevi, Pedastools, Plex, Renew, Stackable, Swoop, TriFlex, Twist, Verus and Vista are among the trademarks of Herman Miller, Inc., and its owned subsidiaries.

SChemsurf® is a registered trademark of Wilsonart International.

Corian® is a registered trademark of E.I. du Pont de Nemours and Company Corporation.

FLEXNET™ is a trademark of Milliken & Company.

Floor Saver Glide® is a registered trademark of Carpin Manufacturing, Inc.

Geiger® is a registered trademark of Geiger International.

Microsoft® and Natural® Keyboard are registered trademarks of Microsoft Corporation.

Place Textiles® is a registered trademark of Place Textiles.