Prices effective September 3, 2019

Published September 2019

# Canvas Office Landscape®

## Channel


| | |
|---|---|
| **Introduction** | **page 2** |
| **Canvas Office Landscape Channel** | **3** |
| Frame | 5 |
| Counterweight | 7 |
| Gallery Panel | 8 |
| Frame Structure | 13 |
| Connectors and Covers | 17 |
| Top Caps | 25 |
| Tiles | 34 |
| Energy Distribution | 43 |
| Screens | 56 |
| **Indices** | **71** |
| By Name | 71 |
| By Number | 73 |
| **Appendices** | |
| 20-Day or Less/Assigned Lead-Time Order Information | |
| Stain-to-Match Program | |
| Customer's Own Material Order Information-Workspaces | |
| Proprietary Textiles Application Chart-Workspaces | |
| Proprietary Textile Colors-Workspaces | |


**For the latest materials information, refer to the Materials pages on HermanMiller.com.**

# Introduction

## A Note on the Organization of This Book

There are a few signals that will help you understand the organization of this book. Once you know them, you should be able to find your way around easily.

**Like a newspaper, this book is formatted with columns of text and illustrations that run vertically.**

Information wraps from one column to the next and continues for as many pages as it needs to.

**Black bars are clues.**

A black bar at the top of a page signals the start of information about a product.

This information is divided into two sections, each signaled by a black bar. Product Information includes a description, additional notes, and dimensional drawings. Specification Information, which always begins at the top of a column, includes a series of steps. Each step represents a decision you need to make in order to complete your product number. Steps must be followed sequentially. The number of pages needed to complete information on a product varies; some will be complete in one page; others may fill three or four pages. Just continue going through the steps until you run into the next product, signaled by the black bar at the top of the page.

Black tabs running along the outside edge of the page help you locate what section you are in or what section you want to go to. You can thumb forwards or backwards to find a section; tabs and text appear on both sides of the page.

The additional pages in the back of the book include the appendices and indices. They are signaled by a long black bar running along the outside edge of the page.

**The index is presented two ways.**

The first index is in alphabetical order by product name. It can be helpful if you are new to the products and numbering scheme or if you are looking for a type of product, such as work chair or round table.
The second index is by product number. It lists, in alphanumeric order, the base product number, typically a five-digit number.

This book is effective September 3, 2019, subject to change without notice. Products may be purchased from authorized Herman Miller dealers who will quote prices upon request. For more information about our products and services or to see a list of dealers, visit www.HermanMiller.com.

All prices are list prices in US Dollars. Additional services, such as planning services, design, storage, and installation, are not included and must be added to these prices when the additional services are requested.

Illustrations, specifications, and prices are based on the latest information at the time of publication. The right is reserved to make changes at any time without notice in prices, fabrics, finishes, materials, specifications, and models, and also to discontinue models and finishes.

Dimensions shown in the drawings are engineering drawing dimensions rounded up to the nearest 1/8". Product is shipped set up or knocked down. Products that include "Shipped knocked down" in the description require some assembly. If this statement does not appear in the description, the product is shipped assembled.

Service problems are normally handled by a Herman Miller authorized dealer. Where this cannot be accomplished on a local level, service problems should be referred to the Customer Care Representative for your region, Herman Miller, Inc., Zeeland, Michigan 49464.

**20-Day or Less/Assigned Lead-Time Shipments**

All products and options in this price book not designated by an Assigned Program icon A will ship in **20 business days or less** after being acknowledged by Herman Miller.

Products and options designated by an A are on the assigned lead-time program and may ship in 20 days, less than 20 days, or more than 20 days from order acknowledgement.

Infrastructure

Energy Distribution

Screens

# Frame FZ110.

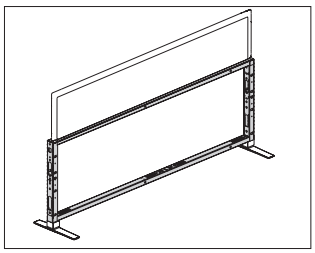

## Product Information

### Description

This steel frame defines space and channels power and data to the user. Frame holds individual tiles on both sides.

### Notes

When finished with cladding, Channel structure is 3″ thick.

With feet added, Channel frame sits 4″ off the floor. Frame can be clad to have an open base or tiles to-the-floor.

24″- and 30″-wide frames cannot support access to power.

Power can enter from bottom opening using an internal direct connect-floor (FZ144.), from a receptacle location using an external direct connect (FZ140.), or from the end of Channel using a ceiling power entry (FZ142.), ordered separately.

Frames of unequal height cannot connect to each other.

Order the following products separately:

- Frame-to-frame connection hardware (FZ128.)
- Structural and nonstructural feet (FZ119., or FZ117.)
- To-the-floor or open base tiles (FZ375., or FZ170.)
- Standard or architectural top cap (FZ112., or FZ11A.)
- Standard or architectural finished end (FZ160., or FZ16A.)
- Power harness (FZ150.)
- Power jumper (FZ154.)

For cable capacity information, see Cable Capacity Charts in Omni.

### Dimensions

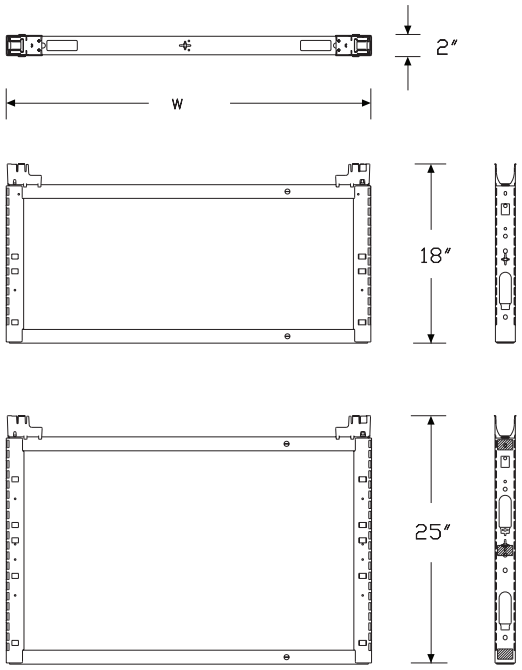

**Specification Information**

Step 1.

**FZ110.** A

Step 2. Height

**22** 22″ high A
**29** 29″ high A

Step 3. Width

**24** 24″ wide A
**30** 30″ wide A
**36** 36″ wide A
**42** 42″ wide A
**48** 48″ wide A
**54** 54″ wide A
**60** 60″ wide A
**66** 66″ wide A
**72** 72″ wide A

Prices for Steps 1-3.

| | | 24 | 30 | 36 | 42 | 48 | 54 |
|---|---|---|---|---|---|---|---|
| **FZ110.** | **22** | $140 | 145 | 150 | 155 | 166 | 182 |
| | **29** | $143 | 149 | 157 | 163 | 171 | 197 |

| | | 60 | 66 | 72 |
|---|---|---|---|---|
| **FZ110.** | **22** | $194 | 199 | 211 |
| | **29** | $207 | 213 | 218 |

# Counterweight FZ19D.

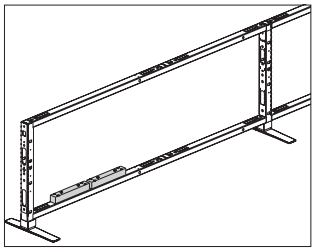

## Product Information

Description

This counterweight attaches to the top of the lower frame rail. It is required for specific applications supported by structural feet. 1 counterweight includes 2 weighted blocks and attachment hardware.

Notes

Each counterweight includes 2 pieces.

For applications 5′- to 9′-long with structural feet (FZ119.), specify 2 counterweights.

For applications 9′ 6″- to 12′-long with structural feet (FZ119.), specify 1 counterweight.

For applications longer than 12′ with structural feet (FZ119.), no counterweight is required.

For more application information, see Channel Planning Guide.

Dimensions

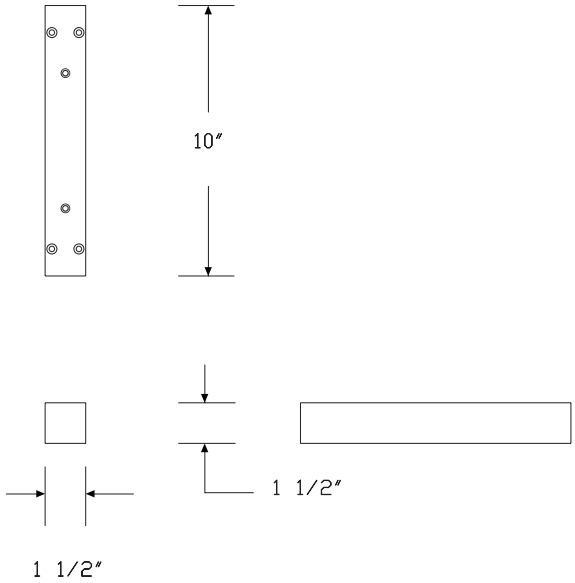


## Specification Information

Step 1.

| | |
|---|---|
| **FZ19D.** | $197 |

# Gallery Panel, Channel Attached FZ113.

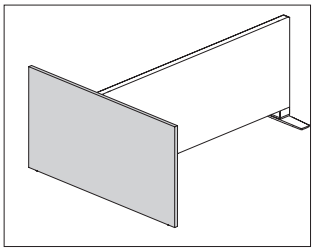

## Product Information

### Description

This structural panel stands on the floor and attaches to a Channel to provide end-of-run support and privacy. It is 1¼" thick and has a laminate surface with thermoplastic edge, laminate surface with a thermoplastic backed plywood edge, or a veneer surface and edge. Leveling glides and attachment hardware included.

### Notes

Gallery panels ranging from 24"-72" wide come as a single piece. Gallery panels ranging from 84"-120" wide come in 3 pieces.

Mid-attached gallery panels are 3" wider than nominal dimension.

Leveling glides provide 2" of leveling adjustment.

Grain direction is vertical on veneer and wood-grain laminate panels.

Attachment direction is determined by facing the gallery panel from outside the workstation. Left attachment (L) connects the left side of a gallery panel to the end of a Channel. Right attachment (R) connects the right side of a gallery panel to the end of a Channel. Mid attachment (M) connects the middle of a gallery panel to the end of a Channel.

### Dimensions

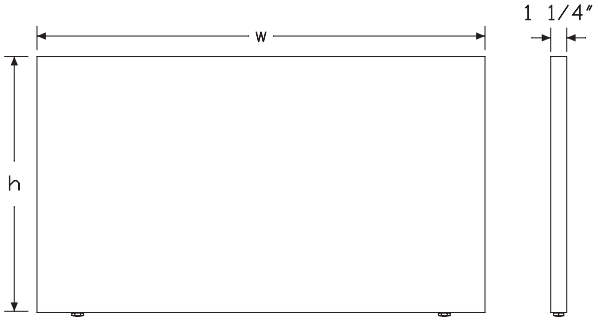


## Specification Information

### Step 1.

**FZ113.**

### Step 2. Frame Height

**22** use with 22"-high frames
**29** use with 29"-high frames

### Step 3. Gallery Panel Height

*For use with 22"-high frames (22)*

**22** 22" high
**29** 29" high
**35** 35" high
**42** 42" high
**46** 46" high

*For use with 29"-high frames (29)*

**29** 29" high
**35** 35" high
**42** 42" high
**46** 46" high

### Step 4. Width

*For 22" high (22)*

**24** 24" wide
**30** 30" wide
**36** 36" wide
**42** 42" wide
**48** 48" wide
**54** 54" wide
**60** 60" wide
**72** 72" wide
**78** 78" wide

# Gallery Panel, Channel Attached

*continued*

*For 29" high (29), 35" high (35), 42" high (42), or 46" high (46)*

| | |
|---|---|
| **24** | 24" wide |
| **30** | 30" wide |
| **36** | 36" wide |
| **42** | 42" wide |
| **48** | 48" wide |
| **54** | 54" wide |
| **60** | 60" wide |
| **72** | 72" wide |
| **78** | 78" wide |
| **84** | 84" wide |
| **90** | 90" wide |
| **96** | 96" wide |
| **120** | 120" wide |

Step 5. Surface Material

| | |
|---|---|
| **L** | laminate |
| **W** | veneer |
| **U** | laminate top/universal edge |

Step 6. Attachment Method

*For 24" wide (24), 30" wide (30), 36" wide (36), or 42" wide (42)*

| | |
|---|---|
| **L** | left attachment |
| **R** | right attachment |

*For 48" wide (48), 54" wide (54), or 60" wide (60)*

| | |
|---|---|
| **L** | left attachment |
| **M** | mid attachment |
| **R** | right attachment |

*For 72" wide (72), 78" wide (78), 84" wide (84), 90" wide (90), 96" wide (96), or 120" wide (120)*

| | |
|---|---|
| **M** | mid attachment |

Prices for Steps 1-6.

| | | | 24LL | 24LR | 24WL | 24WR | 24UL | 24UR |
|---|---|---|---|---|---|---|---|---|
| **FZ113.** | **22** | **22** | $237 | 237 | 617 | 617 | 237 | 237 |
| | | **29** | $317 | 317 | 697 | 697 | 317 | 317 |
| | | **35** | $427 | 427 | 937 | 937 | 427 | 427 |
| | | **42** | $475 | 475 | 1044 | 1044 | 475 | 475 |
| | | **46** | $528 | 528 | 1160 | 1160 | 528 | 528 |
| | **29** | **29** | $317 | 317 | 697 | 697 | 317 | 317 |
| | | **35** | $427 | 427 | 937 | 937 | 427 | 427 |
| | | **42** | $475 | 475 | 1044 | 1044 | 475 | 475 |
| | | **46** | $528 | 528 | 1160 | 1160 | 528 | 528 |

| | | | 30LL | 30LR | 30WL | 30WR | 30UL | 30UR |
|---|---|---|---|---|---|---|---|---|
| **FZ113.** | **22** | **22** | $343 | 343 | 849 | 849 | 343 | 343 |
| | | **29** | $423 | 423 | 928 | 928 | 423 | 423 |
| | | **35** | $533 | 533 | 1171 | 1171 | 533 | 533 |
| | | **42** | $581 | 581 | 1277 | 1277 | 581 | 581 |
| | | **46** | $633 | 633 | 1393 | 1393 | 633 | 633 |
| | **29** | **29** | $423 | 423 | 928 | 928 | 423 | 423 |
| | | **35** | $533 | 533 | 1171 | 1171 | 533 | 533 |
| | | **42** | $581 | 581 | 1277 | 1277 | 581 | 581 |
| | | **46** | $633 | 633 | 1393 | 1393 | 633 | 633 |

| | | | 36LL | 36LR | 36WL | 36WR | 36UL | 36UR |
|---|---|---|---|---|---|---|---|---|
| **FZ113.** | **22** | **22** | $396 | 396 | 965 | 965 | 396 | 396 |
| | | **29** | $475 | 475 | 1044 | 1044 | 475 | 475 |
| | | **35** | $587 | 587 | 1290 | 1290 | 587 | 587 |
| | | **42** | $633 | 633 | 1393 | 1393 | 633 | 633 |
| | | **46** | $686 | 686 | 1509 | 1509 | 686 | 686 |
| | **29** | **29** | $475 | 475 | 1044 | 1044 | 475 | 475 |
| | | **35** | $587 | 587 | 1290 | 1290 | 587 | 587 |
| | | **42** | $633 | 633 | 1393 | 1393 | 633 | 633 |
| | | **46** | $686 | 686 | 1509 | 1509 | 686 | 686 |

| | | | 42LL | 42LR | 42WL | 42WR | 42UL | 42UR |
|---|---|---|---|---|---|---|---|---|
| **FZ113.** | **22** | **22** | $475 | 475 | 1139 | 1139 | 475 | 475 |
| | | **29** | $554 | 554 | 1219 | 1219 | 554 | 554 |
| | | **35** | $667 | 667 | 1465 | 1465 | 667 | 667 |
| | | **42** | $712 | 712 | 1566 | 1566 | 712 | 712 |
| | | **46** | $765 | 765 | 1682 | 1682 | 765 | 765 |
| | **29** | **29** | $554 | 554 | 1219 | 1219 | 554 | 554 |
| | | **35** | $667 | 667 | 1465 | 1465 | 667 | 667 |
| | | **42** | $712 | 712 | 1566 | 1566 | 712 | 712 |
| | | **46** | $765 | 765 | 1682 | 1682 | 765 | 765 |

| | | | 48LL | 48LM | 48LR | 48WL | 48WM | 48WR |
|---|---|---|---|---|---|---|---|---|
| **FZ113.** | **22** | **22** | $553 | 553 | 553 | 1312 | 1300 | 1312 |
| | | **29** | $633 | 633 | 633 | 1393 | 1393 | 1393 |
| | | **35** | $746 | 746 | 746 | 1642 | 1789 | 1642 |
| | | **42** | $791 | 791 | 791 | 1741 | 1741 | 1741 |
| | | **46** | $844 | 844 | 844 | 1857 | 1858 | 1857 |
| | **29** | **29** | $633 | 633 | 633 | 1393 | 1393 | 1393 |
| | | **35** | $746 | 746 | 746 | 1642 | 1789 | 1642 |
| | | **42** | $791 | 791 | 791 | 1741 | 1741 | 1741 |
| | | **46** | $844 | 844 | 844 | 1857 | 1858 | 1857 |

# Gallery Panel, Channel Attached

*continued*

| | 48UL | 48UM | 48UR | 54LL | 54LM | 54LR |
|---|---|---|---|---|---|---|
| **FZ113. 22 22** | $553 | 553 | 553 | 606 | 606 | 606 |
| **29** | $633 | 633 | 633 | 685 | 685 | 685 |
| **35** | $746 | 746 | 746 | 799 | 799 | 799 |
| **42** | $791 | 791 | 791 | 844 | 844 | 844 |
| **46** | $844 | 844 | 844 | 896 | 896 | 896 |
| **29 29** | $633 | 633 | 633 | 685 | 685 | 685 |
| **35** | $746 | 746 | 746 | 799 | 799 | 799 |
| **42** | $791 | 791 | 791 | 844 | 844 | 844 |
| **46** | $844 | 844 | 844 | 896 | 896 | 896 |

| | 54WL | 54WM | 54WR | 54UL | 54UM | 54UR |
|---|---|---|---|---|---|---|
| **FZ113. 22 22** | $1365 | 1352 | 1365 | 606 | 606 | 606 |
| **29** | $1445 | 1445 | 1445 | 685 | 685 | 685 |
| **35** | $1693 | 1846 | 1693 | 799 | 799 | 799 |
| **42** | $1793 | 1793 | 1793 | 844 | 844 | 844 |
| **46** | $1908 | 1909 | 1908 | 896 | 896 | 896 |
| **29 29** | $1445 | 1445 | 1445 | 685 | 685 | 685 |
| **35** | $1693 | 1846 | 1693 | 799 | 799 | 799 |
| **42** | $1793 | 1793 | 1793 | 844 | 844 | 844 |
| **46** | $1908 | 1909 | 1908 | 896 | 896 | 896 |

| | 60LL | 60LM | 60LR | 60WL | 60WM | 60WR |
|---|---|---|---|---|---|---|
| **FZ113. 22 22** | $659 | 659 | 659 | 1545 | 1529 | 1545 |
| **29** | $739 | 739 | 739 | 1624 | 1624 | 1624 |
| **35** | $852 | 852 | 852 | 1875 | 2044 | 1875 |
| **42** | $897 | 897 | 897 | 1972 | 1972 | 1972 |
| **46** | $950 | 950 | 950 | 2088 | 2088 | 2088 |
| **29 29** | $739 | 739 | 739 | 1624 | 1624 | 1624 |
| **35** | $852 | 852 | 852 | 1875 | 2044 | 1875 |
| **42** | $897 | 897 | 897 | 1972 | 1972 | 1972 |
| **46** | $950 | 950 | 950 | 2088 | 2088 | 2088 |

| | 60UL | 60UM | 60UR | 72LM | 72WM | 72UM |
|---|---|---|---|---|---|---|
| **FZ113. 22 22** | $659 | 659 | 659 | 764 | 1759 | 764 |
| **29** | $739 | 739 | 739 | 844 | 1857 | 844 |
| **35** | $852 | 852 | 852 | 959 | 2299 | 959 |
| **42** | $897 | 897 | 897 | 1002 | 2204 | 1002 |
| **46** | $950 | 950 | 950 | 1055 | 2320 | 1055 |
| **29 29** | $739 | 739 | 739 | 844 | 1857 | 844 |
| **35** | $852 | 852 | 852 | 959 | 2299 | 959 |
| **42** | $897 | 897 | 897 | 1002 | 2204 | 1002 |
| **46** | $950 | 950 | 950 | 1055 | 2320 | 1055 |

| | 78LM | 78WM | 78UM | 84LM | 84WM | 84UM |
|---|---|---|---|---|---|---|
| **FZ113. 22 22** | $869 | 1989 | 869 | — | — | — |
| **29** | $950 | 2086 | 950 | 1106 | 2432 | 1106 |
| **35** | $1064 | 2528 | 1064 | 1303 | 2947 | 1303 |
| **42** | $1108 | 2433 | 1108 | 1266 | 2785 | 1266 |
| **46** | $1160 | 2550 | 1160 | 1438 | 3163 | 1438 |
| **29 29** | $949 | 2065 | 949 | 1106 | 2432 | 1106 |
| **35** | $1064 | 2528 | 1064 | 1303 | 2947 | 1303 |
| **42** | $1107 | 2413 | 1107 | 1266 | 2785 | 1266 |
| **46** | $1159 | 2633 | 1159 | 1438 | 3163 | 1438 |

| | 90LM | 90WM | 90UM | 96LM | 96WM | 96UM |
|---|---|---|---|---|---|---|
| **FZ113. 22 29** | $1160 | 2542 | 1160 | 1216 | 2676 | 1216 |
| **35** | $1358 | 3068 | 1358 | 1413 | 3213 | 1413 |
| **42** | $1317 | 2889 | 1317 | 1371 | 3016 | 1371 |
| **46** | $1493 | 3272 | 1493 | 1548 | 3405 | 1548 |
| **29 29** | $1160 | 2542 | 1160 | 1216 | 2676 | 1216 |
| **35** | $1358 | 3068 | 1358 | 1413 | 3213 | 1413 |
| **42** | $1317 | 2889 | 1317 | 1371 | 3016 | 1371 |
| **46** | $1493 | 3272 | 1493 | 1548 | 3405 | 1548 |

| | 120LM | 120WM | 120UM |
|---|---|---|---|
| **FZ113. 22 29** | $1438 | 3163 | 1438 |
| **35** | $1564 | 3749 | 1564 |
| **42** | $1582 | 3479 | 1582 |
| **46** | $1769 | 3892 | 1769 |
| **29 29** | $1438 | 3163 | 1438 |
| **35** | $1564 | 3749 | 1564 |
| **42** | $1582 | 3479 | 1582 |
| **46** | $1769 | 3892 | 1769 |

## Step 7. Surface Finish

*For 24" wide (24), 30" wide (30), 36" wide (36), 42" wide (42), 48" wide (48), 54" wide (54), 78" wide (78), 84" wide (84), 90" wide (90), 96" wide (96), or 120" wide (120) with laminate (L), or laminate top/ universal edge (U)*

| | | |
|---|---|---|
| **28** | canyon | +$0 |
| **29** | misted | +$0 |
| **38** | twilight | +$0 |
| **39** | desert | +$0 |
| **76** | light brown walnut | +$0 |
| **8Q** | folkstone grey | +$0 |
| **91** | white | +$0 |
| **98** | studio white | +$0 |
| **BU** | black umber | +$0 |
| **CL** | cool grey neutral | +$0 |

# Gallery Panel, Channel Attached

*continued*

| | | |
|---|---|---|
| **HF** | inner tone light | +$0 |
| **HM** | natural maple | +$0 |
| **HP** | light anigre | +$0 |
| **HT** | inner tone | +$0 |
| **HX** | aged cherry | +$0 |
| **HY** | walnut on cherry | +$0 |
| **LA** | light ash | +$0 |
| **LBA** | clear on ash | +$0 |
| **LBR** | phantom ecru | +$0 |
| **LBS** | phantom cocoa | +$0 |
| **LBU** | medium matte walnut | +$0 |
| **LBV** | warm grey teak | +$0 |
| **LBB** | oak on ash | +$0 |
| **LBC** | walnut on ash | +$0 |
| **LBD** | dark brown walnut | +$0 |
| **LBE** | medium red walnut | +$0 |
| **LBF** | neutral twill | +$0 |
| **LBG** | sarum twill | +$0 |
| **LBH** | earthen twill | +$0 |
| **LBJ** | graphite twill | +$0 |
| **LBM** | crisp linen | +$0 |
| **LBN** | classic linen | +$0 |
| **LBP** | casual linen | +$0 |
| **LBQ** | white twill | +$0 |
| **LT** | light tone | +$0 |
| **LU** | soft white | +$0 |
| **MT** | medium tone | +$0 |
| **OG** | honey maple | +$0 |
| **WL** | sandstone | +$0 |
| **WN** | warm grey neutral | +$0 |
| **X1** | chalk white | +$0 |

*For 60" wide (60) or 72" wide (72) with laminate (L), or laminate top/ universal edge (U)*

| | | |
|---|---|---|
| **28** | canyon | +$0 |
| **29** | misted | +$0 |
| **38** | twilight | +$0 |
| **39** | desert | +$0 |
| **8Q** | folkstone grey | +$0 |
| **91** | white | +$0 |
| **98** | studio white | +$0 |
| **BU** | black umber | +$0 |
| **CL** | cool grey neutral | +$0 |
| **HF** | inner tone light | +$0 |
| **HT** | inner tone | +$0 |
| **LBM** | crisp linen | +$0 |
| **LBN** | classic linen | +$0 |
| **LBP** | casual linen | +$0 |
| **LT** | light tone | +$0 |
| **LU** | soft white | +$0 |
| **MT** | medium tone | +$0 |
| **WL** | sandstone | +$0 |
| **WN** | warm grey neutral | +$0 |
| **X1** | chalk white | +$0 |
| **ZZ** | open line laminate (nonstandard) | +$20 |

*For veneer (W)*

| | | |
|---|---|---|
| **2U** | light brown walnut | +$0 |
| **3U** | medium red cherry | +$0 |
| **40** | dark brown walnut | +$0 |
| **6U** | chocolate brown sapele | +$0 |
| **DU** | cathedral recut natural maple | +$0 |
| **ED** | aged cherry | +$0 |
| **EK** | medium red walnut | +$0 |
| **ET** | clear on ash | +$0 |
| **EU** | oak on ash | +$0 |
| **EV** | walnut on ash | +$0 |
| **EW** | medium matte walnut | +$0 |
| **HU** | cathedral recut light anigre | +$0 |
| **JU** | cathedral recut aged cherry | +$0 |
| **UL** | natural maple | +$0 |
| **UX** | walnut on cherry | +$0 |
| **VU** | cathedral recut light brown walnut | +$0 |
| **WU** | cathedral recut walnut on cherry | +$0 |
| **XU** | cathedral recut medium red cherry | +$0 |
| **ZU** | cathedral recut chocolate brown sapele | +$0 |

# Gallery Panel, Channel Attached

*continued*



Step 8. Edge Finish

*For laminate (L)*

| | | |
|---|---|---|
| **76** | light brown walnut | +$0 |
| **8Q** | folkstone grey | +$0 |
| **91** | white | +$0 |
| **98** | studio white | +$0 |
| **BU** | black umber | +$0 |
| **CL** | cool grey neutral | +$0 |
| **HF** | inner tone light | +$0 |
| **HM** | natural maple | +$0 |
| **HP** | light anigre | +$0 |
| **HT** | inner tone | +$0 |
| **HX** | aged cherry | +$0 |
| **HY** | walnut on cherry | +$0 |
| **LA** | light ash | +$0 |
| **LBA** | clear on ash | +$0 |
| **LBR** | phantom ecru | +$0 |
| **LBS** | phantom cocoa | +$0 |
| **LBU** | medium matte walnut | +$0 |
| **LBV** | warm grey teak | +$0 |
| **LBB** | oak on ash | +$0 |
| **LBC** | walnut on ash | +$0 |
| **LBD** | dark brown walnut | +$0 |
| **LBE** | medium red walnut | +$0 |
| **LBF** | neutral twill | +$0 |
| **LBG** | sarum twill | +$0 |
| **LBH** | earthen twill | +$0 |
| **LBJ** | graphite twill | +$0 |
| **LBK** | pewter mesh | +$0 |
| **LBL** | steel mesh | +$0 |
| **LBM** | crisp linen | +$0 |
| **LBN** | classic linen | +$0 |
| **LBP** | casual linen | +$0 |
| **LBQ** | white twill | +$0 |
| **LU** | soft white | +$0 |
| **MT** | medium tone | +$0 |
| **WL** | sandstone | +$0 |
| **WN** | warm grey neutral | +$0 |

*For laminate top/universal edge (U)*

| | | |
|---|---|---|
| **PLY** | plywood edge | +$50 |

# Non-Structural Foot FZ117.

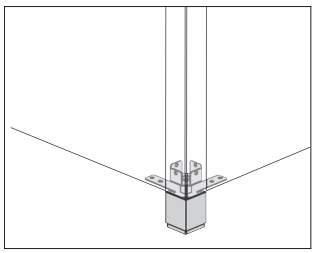

## Product Information

### Description

This individual foot attaches to 1 end of a frame, at the attachment point of 2 adjacent frames within a run, or multiple frames at a 2-, 3-, or 4-way connection. It adjusts up to 2″ for leveling. Attachment hardware included.

### Notes

For use with open base tiles (FZ170.), specify open base (A) option.

For use with to-the-floor tiles (FZ375.), specify to-the-floor tile (B) option.

For use with 120° connections, specify end of frame (1A) option.

For length of run and proper support information, see planning guide.

### Dimensions

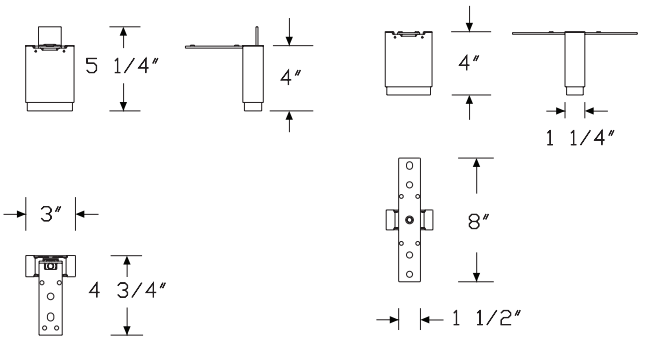


End of frame (1A)

Shared, frame to frame (1B)

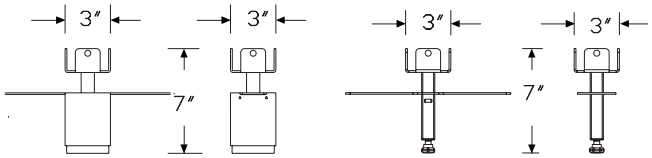


Open base foot (A)

To the floor tile foot (B)

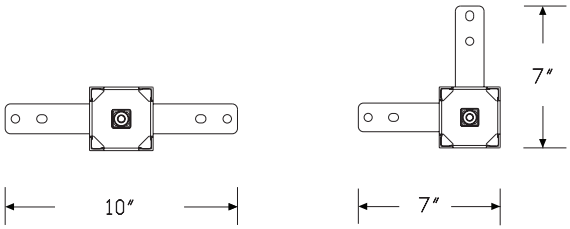


2-Way, 180 degree (2A)

2-Way, 90 degree (2C)

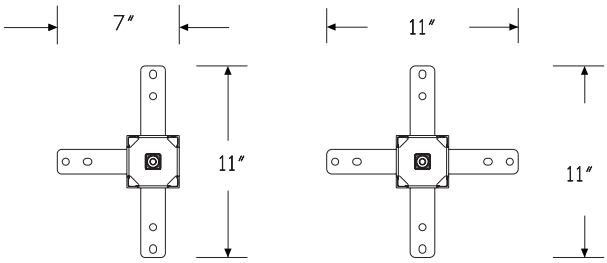


3-Way, 90 degree (3C)

4-Way, 90 degree (4C)

**Specification Information**

Step 1.

**FZ117.**

Step 2. Base Option

| | |
|---|---|
| **A** | open base |
| **B** | to-the-floor tile |

Step 3. Configuration

| | |
|---|---|
| **1A** | end-of-frame |
| **1B** | shared, frame-to-frame connection |
| **2C** | 2-way 90° connection |
| **2A** | 2-way 180° connection |
| **3C** | 3-way 90° connection |
| **4C** | 4-way 90° connection |

Prices for Steps 1-3.

| | | 1A | 1B | 2C | 2A | 3C | 4C |
|---|---|---|---|---|---|---|---|
| **FZ117.** | **A** | $126 | 132 | 249 | 249 | 254 | 261 |
| | **B** | $64 | 67 | 125 | 125 | 128 | 131 |

Step 4. Surface Finish

*For open base (A)*

Metallic Paint

| | | |
|---|---|---|
| **CN** | metallic champagne | +$0 |
| **EH** | metallic bronze | +$0 |
| **MS** | metallic silver | +$0 |

Sand Texture Paint

| | | |
|---|---|---|
| **8Q** | folkstone grey | +$0 |
| **91** | white | +$0 |
| **98** | studio white | +$0 |
| **BK** | black | +$0 |
| **CL** | cool grey neutral | +$0 |
| **G1** | graphite | +$0 |
| **WL** | sandstone | +$0 |
| **WN** | warm grey neutral | +$0 |

# Structural Foot FZ119.

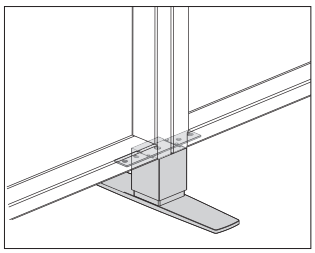

## Product Information

### Description

This individual structural foot supports 1 end of a frame or the attachment point of 2 adjacent frames, and can support a Channel wall run. It adjusts up to 2″ for leveling. Attachment hardware included.

### Notes

For use with open base tiles (FZ170.). specify open base (A) option.

For use with to-the-floor tiles (FZ375.), specify to-the-floor tile (B) option.

Structural foot can be located at the end of a run (1), 6″ from the end (2), or be shared in a frame-to-frame connection (3).

For length of run and proper support information, see planning guide.

### Dimensions

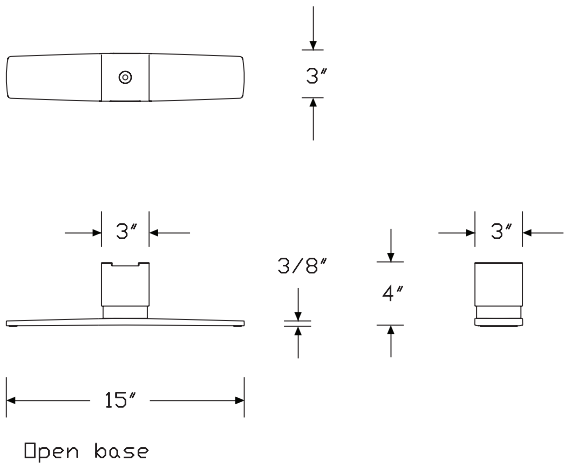


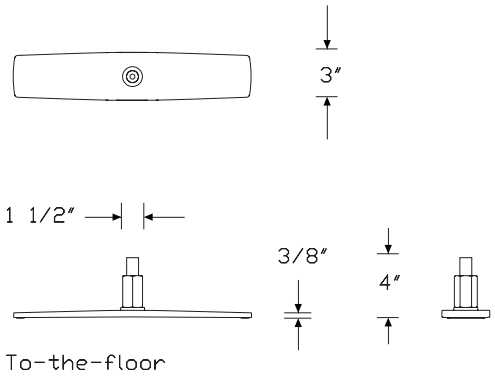

**Specification Information**

Step 1.

**FZ119.**

Step 2. Base Option

| | |
|---|---|
| **A** | open base |
| **B** | to-the-floor tile |

Step 3. Foot Location

| | |
|---|---|
| **1** | end-of-frame |
| **2** | 6" from end |
| **3** | shared, frame-to-frame connection |

Prices for Steps 1-3.

| | | 1 | 2 | 3 |
|---|---|---|---|---|
| **FZ119.** | **A** | $258 | 258 | 258 |
| | **B** | $222 | 222 | 222 |

Step 4. Surface Finish

Sand Texture Paint

| | | |
|---|---|---|
| **8Q** | folkstone grey | +$0 |
| **91** | white | +$0 |
| **98** | studio white | +$0 |
| **BK** | black | +$0 |
| **CL** | cool grey neutral | +$0 |
| **G1** | graphite | +$0 |
| **WL** | sandstone | +$0 |
| **WN** | warm grey neutral | +$0 |

Metallic Paint

| | | |
|---|---|---|
| **CN** | metallic champagne | +$0 |
| **EH** | metallic bronze | +$0 |
| **MS** | metallic silver | +$0 |

# Frame-to-Frame Connection Hardware FZ128.

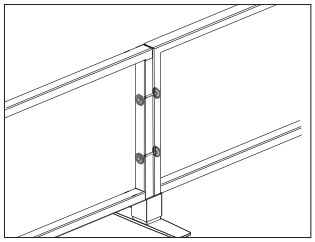

## Product Information

Description

This hardware connects 2 frames of equal height in a straight line. Light seal included; finish is black.

Notes

When used with open base tiles (FZ170.), specify open base (A) option. When used with to-the-floor tiles (FZ375.), specify to-the-floor (B) option.

Dimensions

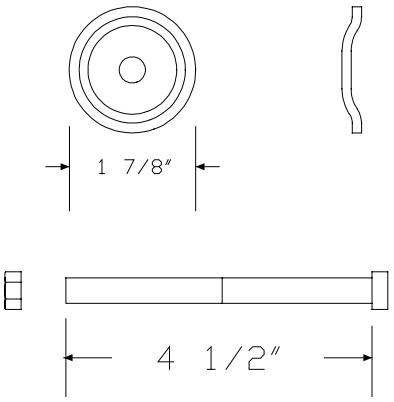


## Specification Information

Step 1.

**FZ128.** A

Step 2. Frame Height

**22** use with 22″-high frames A

**29** use with 29″-high frames A

Step 3. Base Option

**A** open base A

**B** to-the-floor A

Prices for Steps 1-3.

| | | A | B |
|---|---|---|---|
| **FZ128.** | **22** | $24 | 24 |
| | **29** | $24 | 24 |

# 90° Universal Connector FZ121.

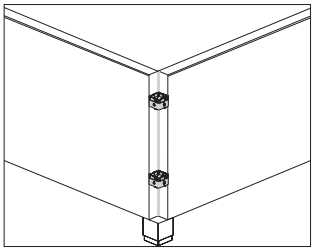



## Product Information

### Description

This connector joins 2, 3, or 4 frames of equal height at 90° angles. Attachment hardware and light seal included. Light seal finish is black.

### Notes

Order the following products separately:

- 90° connector cover (FZ123.)
- 90° connector cover, architectural (FZ12B.)
- 90° connector top cap (FZ126.)
- 90° connector top cap, architectural (FZ12A.)

When used with open base tiles (FZ170.), specify open base (A) option.

When used with to-the-floor tiles (FZ375.), specify to-the-floor (B) option.

### Dimensions

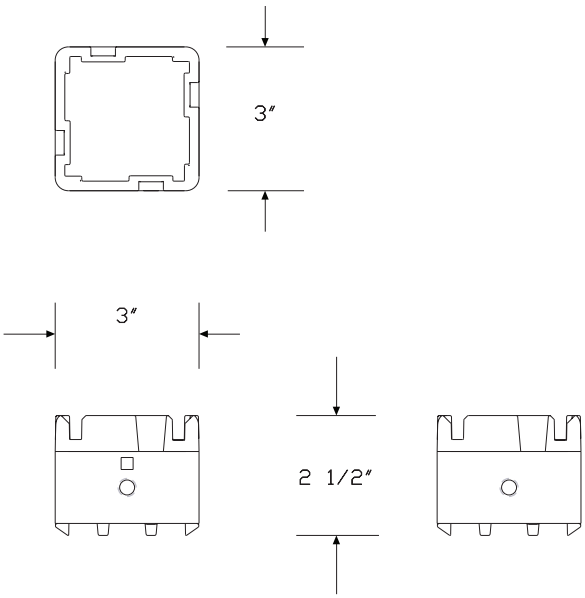


## Specification Information

### Step 1.

**FZ121.** A

### Step 2. Configuration

| | |
|---|---|
| **2** | 2 way, 90° or 180° A |
| **3** | 3 way A |
| **4** | 4 way A |

### Step 3. Frame Height

| | |
|---|---|
| **22** | use with 22″-high frames A |
| **29** | use with 29″-high frames A |

### Step 4. Base Option

| | |
|---|---|
| **A** | open base A |
| **B** | to-the-floor A |

### Prices for Steps 1-4.

| | | | A | B |
|---|---|---|---|---|
| **FZ121.** | **2** | **22** | $61 | 61 |
| | | **29** | $63 | 63 |
| | **3** | **22** | $72 | 72 |
| | | **29** | $74 | 74 |
| | **4** | **22** | $84 | 84 |
| | | **29** | $86 | 86 |

# 120° Universal Connector FZ131.

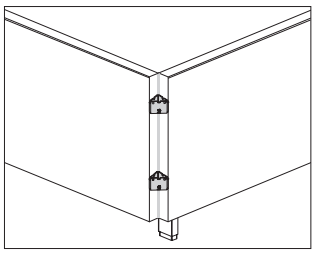

## Product Information

Description

This connector joins 2 or 3 frames of equal height at 120° angles. Attachment hardware and light seal included. Light seal finish is black.

Notes

Order the following products separately:

- 120° connector cover (FZ133.)
- 120° connector top cap (FZ136.)

When used with open base tiles (FZ170.), specify open base (A) option.

When used with to-the-floor tiles (FZ375.), specify to-the-floor (B) option.

Dimensions

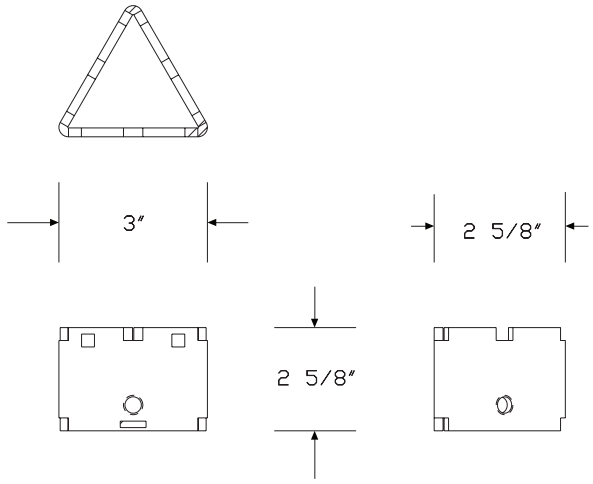


## Specification Information

Step 1.

**FZ131.** A

Step 2. Configuration

**2** 2 way A

**3** 3 way A

Step 3. Frame Height

**22** use with 22″-high frames A

**29** use with 29″-high frames A

Step 4. Base Option

**A** open base A

**B** to-the-floor A

Prices for Steps 1-4.

| | | | A | B |
|---|---|---|---|---|
| **FZ131.** | **2** | **22** | $95 | 95 |
| | | **29** | $99 | 99 |
| | **3** | **22** | $106 | 106 |
| | | **29** | $111 | 111 |

# 90° Connector Cover FZ123.

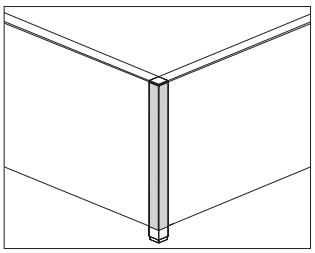



## Product Information

### Description

This connector cover attaches to a 90° universal connector and has a painted surface. Attachment hardware included.

### Notes

Specify connector cover height to match frame height.

Specify 1 side covered (1) or 2 sides covered (2) configuration to match the number of exposed connector sides.

Order 90° connector top cap (FZ126.) separately.

### Dimensions

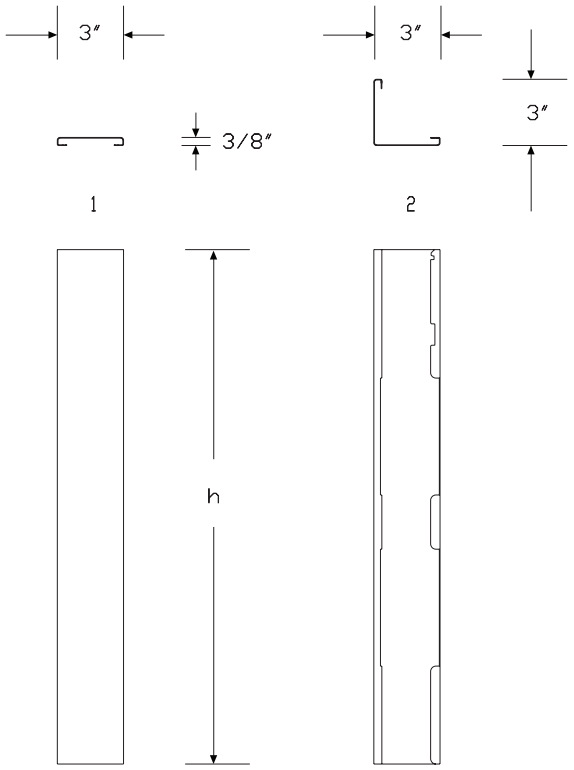


## Specification Information

### Step 1.

**FZ123.** A

### Step 2. Configuration

| | |
|---|---|
| **1** | 1 side covered A |
| **2** | 2 sides covered A |

### Step 3. Height

| | |
|---|---|
| **22** | 22″ high A |
| **29** | 29″ high A |

### Step 4. Base Option

| | |
|---|---|
| **A** | open base A |
| **B** | to-the-floor A |

### Step 5. Surface Material

| | |
|---|---|
| **P** | painted A |

### Prices for Steps 1-5.

| | | | AP | BP |
|---|---|---|---|---|
| **FZ123.** | **1** | **22** | $48 | 50 |
| | | **29** | $49 | 51 |
| | **2** | **22** | $56 | 58 |
| | | **29** | $57 | 59 |

### Step 6. Surface Finish

#### Sand Texture Paint

| | | |
|---|---|---|
| **8Q** | folkstone grey A | +$0 |
| **91** | white A | +$0 |
| **98** | studio white A | +$0 |
| **BK** | black A | +$0 |
| **CL** | cool grey neutral A | +$0 |
| **G1** | graphite A | +$0 |
| **WL** | sandstone A | +$0 |
| **WN** | warm grey neutral A | +$0 |

#### Metallic Paint

| | | |
|---|---|---|
| **CN** | metallic champagne A | +$0 |
| **EH** | metallic bronze A | +$0 |
| **MS** | metallic silver A | +$0 |

# 90° Connector Cover, Architectural FZ12B.

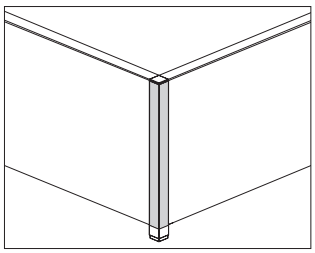

## Product Information

Description

This connector cover attaches to a 90° universal connector and has a painted surface. Attachment hardware included.

Notes

Specify connector cover height to match frame height.

Specify 1 side covered (1) or 2 sides covered (2) configuration to match the number of exposed connector sides.

Order 90° connector top cap, architectural (FZ12A.) separately.

Dimensions

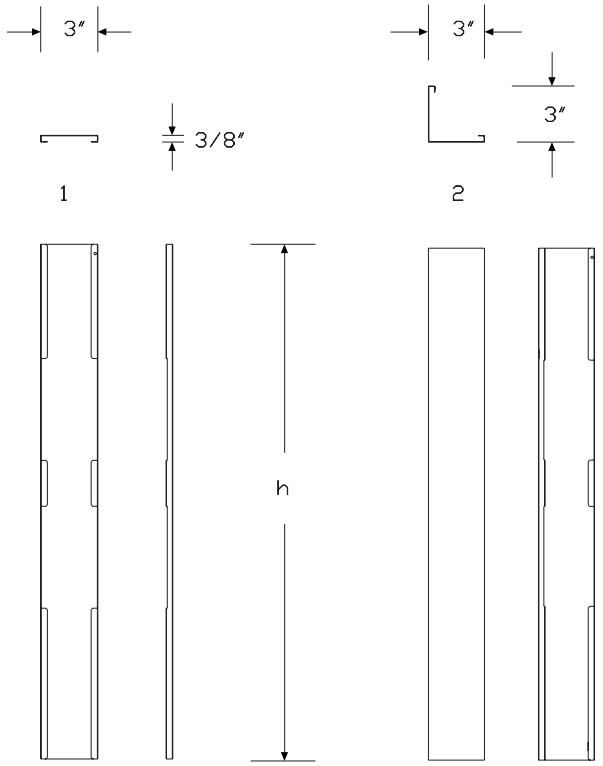


## Specification Information

Step 1.

**FZ12B.** A

Step 2. Configuration

| | |
|---|---|
| **1** | 1 side covered A |
| **2** | 2 sides covered A |

Step 3. Height

| | |
|---|---|
| **22** | 22″ high A |
| **29** | 29″ high A |

Step 4. Base Option

| | |
|---|---|
| **A** | open base A |
| **B** | to-the-floor A |

Step 5. Surface Material

| | |
|---|---|
| **P** | painted A |

Prices for Steps 1-5.

| | | | AP | BP |
|---|---|---|---|---|
| **FZ12B.** | **1** | **22** | $65 | 68 |
| | | **29** | $71 | 74 |
| | **2** | **22** | $81 | 84 |
| | | **29** | $85 | 88 |

Step 6. Surface Finish

Sand Texture Paint

| | | |
|---|---|---|
| **8Q** | folkstone grey A | +$0 |
| **91** | white A | +$0 |
| **98** | studio white A | +$0 |
| **BK** | black A | +$0 |
| **CL** | cool grey neutral A | +$0 |
| **G1** | graphite A | +$0 |
| **WL** | sandstone A | +$0 |
| **WN** | warm grey neutral A | +$0 |

Metallic Paint

| | | |
|---|---|---|
| **CN** | metallic champagne A | +$0 |
| **EH** | metallic bronze A | +$0 |
| **MS** | metallic silver A | +$0 |

# 120° Connector Cover FZ133.

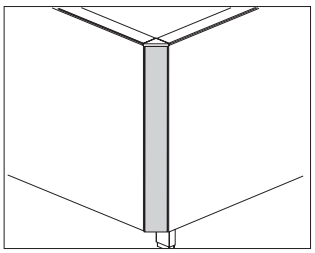

## Product Information

Description

This connector cover attaches to a 120° connector and has a painted surface. Attachment hardware included.

Notes

Specify connector cover height to match frame height.

Dimensions

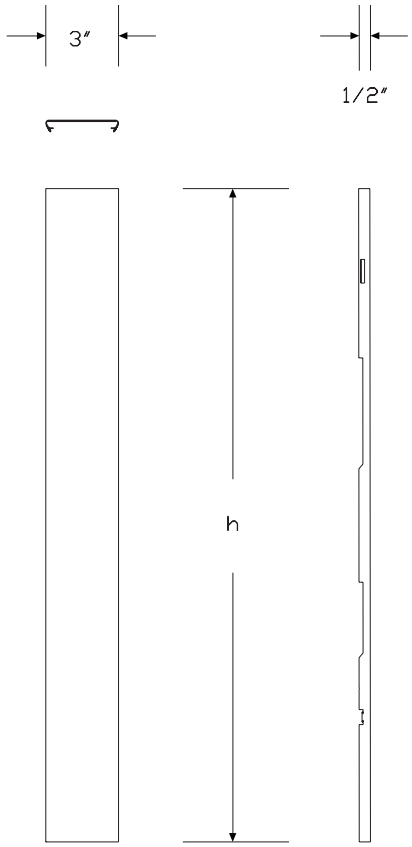


## Specification Information

Step 1.

**FZ133.** A

Step 2. Configuration

| | |
|---|---|
| **1** | 1 side covered A |

Step 3. Height

| | |
|---|---|
| **22** | 22″ high A |
| **29** | 29″ high A |

Step 4. Base Option

| | |
|---|---|
| **A** | open base A |
| **B** | to-the-floor A |

Step 5. Surface Material

| | |
|---|---|
| **P** | painted A |

Prices for Steps 1-5.

| | | | AP | BP |
|---|---|---|---|---|
| **FZ133.** | **1** | **22** | $77 | 80 |
| | | **29** | $80 | 83 |

Step 6. Surface Finish

Sand Texture Paint

| | | |
|---|---|---|
| **8Q** | folkstone grey A | +$0 |
| **91** | white A | +$0 |
| **98** | studio white A | +$0 |
| **BK** | black A | +$0 |
| **CL** | cool grey neutral A | +$0 |
| **G1** | graphite A | +$0 |
| **WL** | sandstone A | +$0 |
| **WN** | warm grey neutral A | +$0 |

Metallic Paint

| | | |
|---|---|---|
| **CN** | metallic champagne A | +$0 |
| **EH** | metallic bronze A | +$0 |
| **MS** | metallic silver A | +$0 |

# Finished End FZ160.

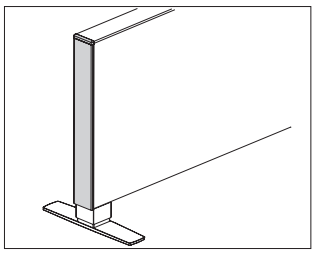

## Product Information

Description

This cover finishes the exposed end of a single frame. It has a painted surface and a black light seal. Attachment hardware included.

Notes

Specify finished end height to match frame height.

For use with open base tiles (FZ170.), specify finished end open base (A) option; for use with to-the-floor tiles (FZ375.), specify finished end to-the-floor (B) option.

Order frame top cap (FZ112.) separately.

Dimensions

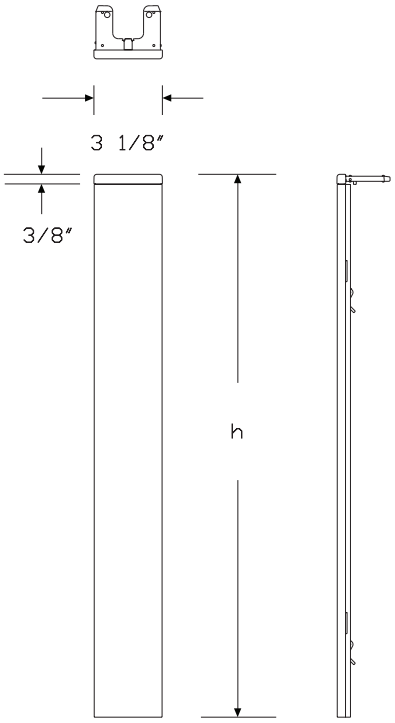


## Specification Information

Step 1.

**FZ160.** A

Step 2. Height

| | |
|---|---|
| **22** | 22" high A |
| **29** | 29" high A |

Step 3. Base Option

| | |
|---|---|
| **A** | open base A |
| **B** | to-the-floor A |

Step 4. Surface Material

| | |
|---|---|
| **P** | painted A |

Prices for Steps 1-4.

| | | | P |
|---|---|---|---|
| **FZ160.** | **22** | **A** | $45 |
| | | **B** | $50 |
| | **29** | **A** | $48 |
| | | **B** | $54 |

Step 5. Surface Finish

| | | |
|---|---|---|
| **8Q** | folkstone grey A | +$0 |
| **91** | white A | +$0 |
| **98** | studio white A | +$0 |
| **BK** | black A | +$0 |
| **CL** | cool grey neutral A | +$0 |
| **G1** | graphite A | +$0 |
| **WL** | sandstone A | +$0 |
| **WN** | warm grey neutral A | +$0 |
| **CN** | metallic champagne A | +$0 |
| **EH** | metallic bronze A | +$0 |
| **MS** | metallic silver A | +$0 |

# Finished End, Architectural FZ16A.

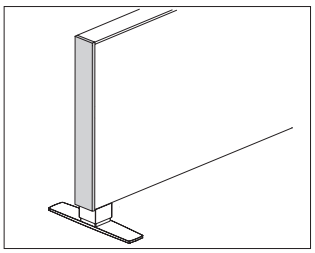

## Product Information

### Description

This cover finishes the exposed end of a single frame. It has a painted surface and a black light seal. Attachment hardware included.

### Notes

Specify finished end height to match frame height.

For use with open base tiles (FZ170.), specify finished end open base (A) option; for use with to-the-floor tiles (FZ375.), specify finished end to-the-floor (B) option.

Order frame top cap, architectural (FZ11A.) separately.

### Dimensions

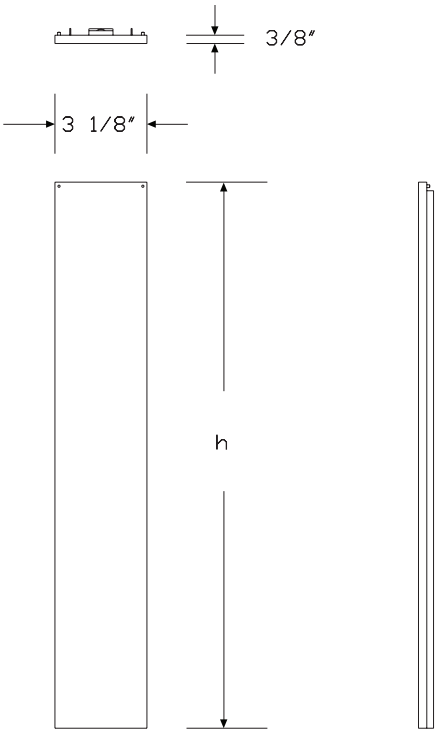


## Specification Information

### Step 1.

**FZ16A.** A

### Step 2. Height

| | |
|---|---|
| **22** | 22″ high A |
| **29** | 29″ high A |

### Step 3. Base Option

| | |
|---|---|
| **A** | open base A |
| **B** | to-the-floor A |

### Step 4. Surface Material

| | |
|---|---|
| **P** | painted A |

### Prices for Steps 1-4.

| | | | P |
|---|---|---|---|
| **FZ16A.** | **22** | **A** | $186 |
| | | **B** | $196 |
| | **29** | **A** | $196 |
| | | **B** | $205 |

### Step 5. Surface Finish

Sand Texture Paint

| | | |
|---|---|---|
| **8Q** | folkstone grey A | +$0 |
| **91** | white A | +$0 |
| **98** | studio white A | +$0 |
| **BK** | black A | +$0 |
| **CL** | cool grey neutral A | +$0 |
| **G1** | graphite A | +$0 |
| **WL** | sandstone A | +$0 |
| **WN** | warm grey neutral A | +$0 |
| **CN** | metallic champagne A | +$0 |
| **EH** | metallic bronze A | +$0 |
| **MS** | metallic silver A | +$0 |

# Top Cap FZ112.

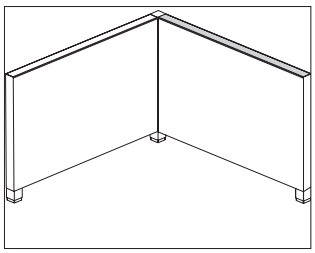

## Product Information

Description

This top cap trims the top of an individual frame or frames and has a painted surface. Attachment hardware included.

Notes

Tiles (FZ170. or FZ375.) must be specified on both sides of frame for top cap to attach.

Top cap covers 1 or 2 frames.

Frame top cap is not required for frame with frame top screen.

Dimensions

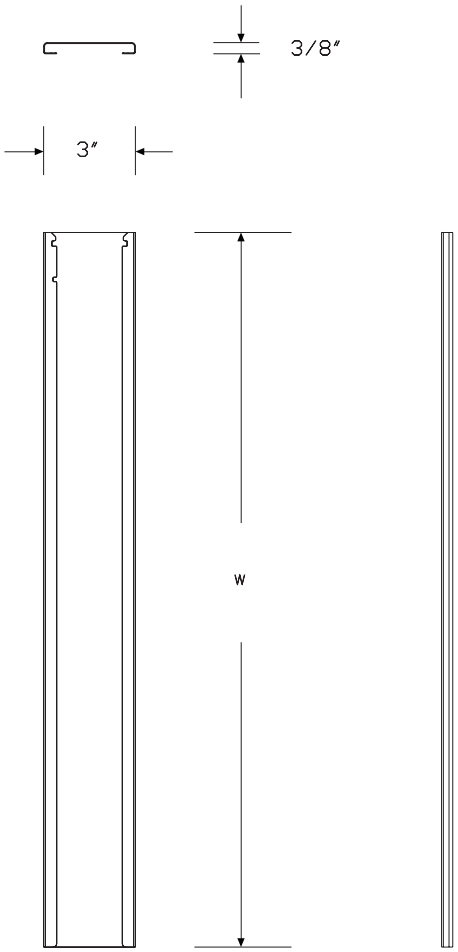

## Specification Information

Step 1.

**FZ112.** A

Step 2. Width

| | |
|---|---|
| **24** | 24″ wide A |
| **30** | 30″ wide A |
| **36** | 36″ wide A |
| **42** | 42″ wide A |
| **48** | 48″ wide A |
| **54** | 54″ wide A |
| **60** | 60″ wide A |
| **66** | 66″ wide A |
| **72** | 72″ wide A |
| **78** | 78″ wide A |
| **84** | 84″ wide A |
| **90** | 90″ wide A |
| **96** | 96″ wide A |

Step 3. Surface Material

| | |
|---|---|
| **P** | painted A |

Prices for Steps 1-3.

| | | P |
|---|---|---|
| **FZ112.** | **24** | $30 |
| | **30** | $33 |
| | **36** | $37 |
| | **42** | $42 |
| | **48** | $45 |
| | **54** | $51 |
| | **60** | $56 |
| | **66** | $59 |
| | **72** | $63 |
| | **78** | $67 |
| | **84** | $70 |
| | **90** | $83 |
| | **96** | $87 |

Step 4. Surface Finish

Sand Texture Paint

| | | |
|---|---|---|
| **8Q** | folkstone grey A | +$0 |
| **91** | white A | +$0 |
| **98** | studio white A | +$0 |
| **BK** | black A | +$0 |
| **CL** | cool grey neutral A | +$0 |
| **G1** | graphite A | +$0 |
| **WL** | sandstone A | +$0 |
| **WN** | warm grey neutral A | +$0 |

Metallic Paint

| | | |
|---|---|---|
| **CN** | metallic champagne A | +$0 |
| **EH** | metallic bronze A | +$0 |
| **MS** | metallic silver A | +$0 |

# Top Cap, Architectural FZ11A.

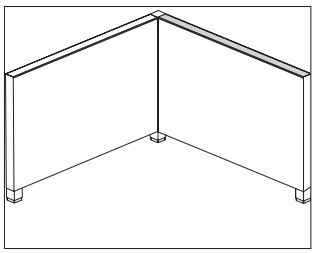

## Product Information

Description

This top cap trims the top of an individual frame or spans 2 frames within a run. Attachment hardware included.

Notes

Tiles (FZ110. or FZ375.) must be specified on both sides of frame for top cap to attach.

Top cap covers 1 or 2 frames.

Frame top cap is not required for frame with frame top screen.

Dimensions

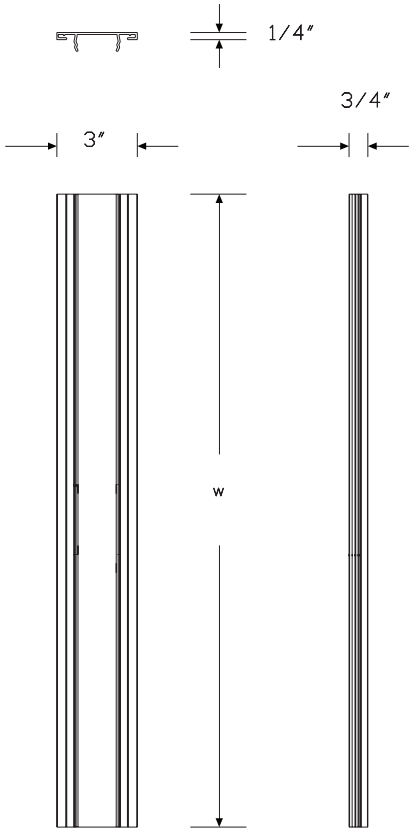


## Specification Information

Step 1.

**FZ11A.** A

Step 2. Width

| | | |
|---|---|---|
| **24** | 24″ wide | A |
| **30** | 30″ wide | A |
| **36** | 36″ wide | A |
| **42** | 42″ wide | A |
| **48** | 48″ wide | A |
| **54** | 54″ wide | A |
| **60** | 60″ wide | A |
| **66** | 66″ wide | A |
| **72** | 72″ wide | A |
| **78** | 78″ wide | A |
| **84** | 84″ wide | A |
| **90** | 90″ wide | A |
| **96** | 96″ wide | A |

Step 3. Surface Material

| | | |
|---|---|---|
| **P** | painted | A |

Prices for Steps 1-3.

| | | P |
|---|---|---|
| **FZ11A.** | **24** | $69 |
| | **30** | $79 |
| | **36** | $88 |
| | **42** | $97 |
| | **48** | $109 |
| | **54** | $117 |
| | **60** | $129 |
| | **66** | $138 |
| | **72** | $148 |
| | **78** | $160 |
| | **84** | $169 |
| | **90** | $194 |
| | **96** | $206 |

## Step 4. Surface Finish

| Sand Texture Paint | | |
|---|---|---|
| **8Q** | folkstone grey A | +$0 |
| **91** | white A | +$0 |
| **98** | studio white A | +$0 |
| **BK** | black A | +$0 |
| **CL** | cool grey neutral A | +$0 |
| **G1** | graphite A | +$0 |
| **WL** | sandstone A | +$0 |
| **WN** | warm grey neutral A | +$0 |
| **CN** | metallic champagne A | +$0 |
| **EH** | metallic bronze A | +$0 |
| **MS** | metallic silver A | +$0 |

# 90° Connector Top Cap FZ126.

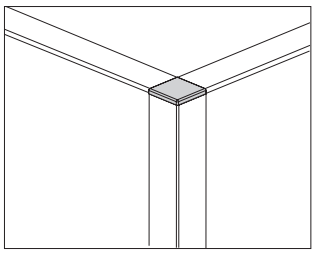

## Product Information

### Description

This cap trims the top of a connector and has a painted surface. Attachment hardware included.

### Notes

Specify top cap to connect into total number of adjacent equal-height frame top caps.

Order the following products separately:

- 90° connector cover (FZ123.)
- Frame top cap (FZ112.)

### Dimensions

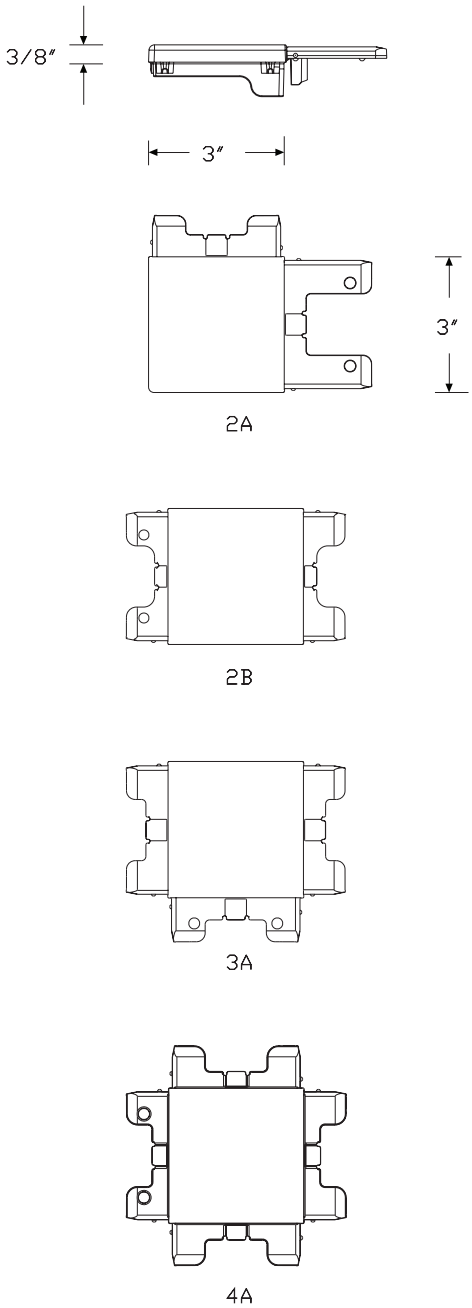

**Specification Information**

Step 1.

**FZ126.** A

Step 2. Configuration

| | |
|---|---|
| **2A** | for 2 frame top caps, 90° A |
| **2B** | for 2 frame top caps, 180° A |
| **3A** | for 3 frame top caps A |
| **4A** | for 4 frame top caps A |

Step 3. Surface Material

| | |
|---|---|
| **P** | painted A |

Prices for Steps 1-3.

| | | P |
|---|---|---|
| **FZ126.** | **2A** | $30 |
| | **2B** | $30 |
| | **3A** | $30 |
| | **4A** | $30 |

Step 4. Surface Finish

Sand Texture Paint

| | | |
|---|---|---|
| **8Q** | folkstone grey A | +$0 |
| **91** | white A | +$0 |
| **98** | studio white A | +$0 |
| **BK** | black A | +$0 |
| **CL** | cool grey neutral A | +$0 |
| **G1** | graphite A | +$0 |
| **WL** | sandstone A | +$0 |
| **WN** | warm grey neutral A | +$0 |
| **CN** | metallic champagne A | +$0 |
| **EH** | metallic bronze A | +$0 |
| **MS** | metallic silver A | +$0 |

# 90° Connector Top Cap, Architectural FZ12A.

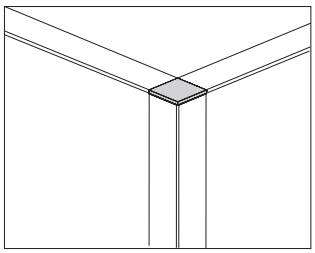

## Product Information

Description

This cap trims the top of an architectural connector and has a painted surface. Attachment hardware included.

Notes

Specify top cap to connect into total number of adjacent equal-height architectural frame top caps.

Order the following products separately:

- 90° connector cover, architectural (FZ12B.)
- Frame top cap, architectural (FZ11A.)

Dimensions

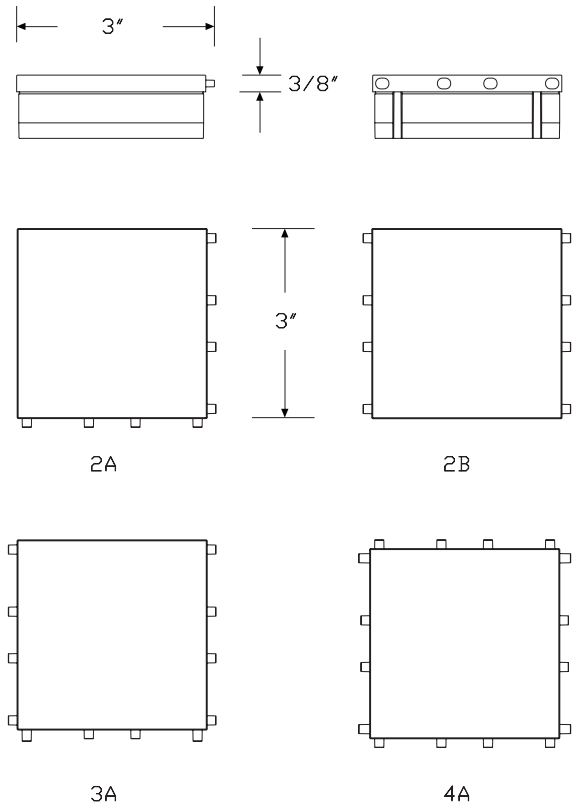


## Specification Information

Step 1.

**FZ12A.** A

Step 2. Configuration

| | |
|---|---|
| **2A** | for 2 frame top caps, 90° A |
| **2B** | for 2 frame top caps, 180° A |
| **3A** | for 3 frame top caps A |
| **4A** | for 4 frame top caps A |

Step 3. Surface Material

| | |
|---|---|
| **P** | painted A |

Prices for Steps 1-3.

| | | P |
|---|---|---|
| **FZ12A.** | **2A** | $25 |
| | **2B** | $25 |
| | **3A** | $25 |
| | **4A** | $25 |

Step 4. Surface Finish

Sand Texture Paint

| | | |
|---|---|---|
| **8Q** | folkstone grey A | +$0 |
| **91** | white A | +$0 |
| **98** | studio white A | +$0 |
| **BK** | black A | +$0 |
| **CL** | cool grey neutral A | +$0 |
| **G1** | graphite A | +$0 |
| **WL** | sandstone A | +$0 |
| **WN** | warm grey neutral A | +$0 |

Metallic Paint

| | | |
|---|---|---|
| **CN** | metallic champagne A | +$0 |
| **EH** | metallic bronze A | +$0 |
| **MS** | metallic silver A | +$0 |

# 120° Connector Top Cap FZ136.

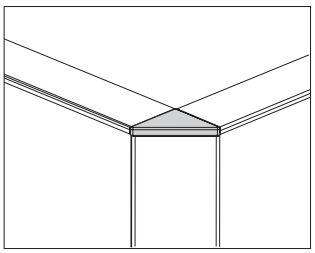



## Product Information

### Description

This cap trims the top of a 120° connector and has a painted surface. Attachment hardware included.

### Notes

Specify top cap to connect into total number of adjacent equal-height frame top caps.

Order the following products separately:

- 120° connector cover (FZ133.)
- Frame top cap (FZ112.)

### Dimensions

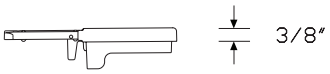


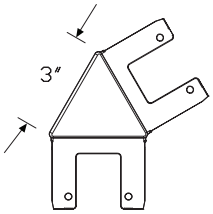


2

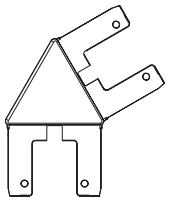

2A

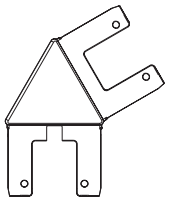

2B

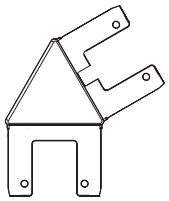

2C

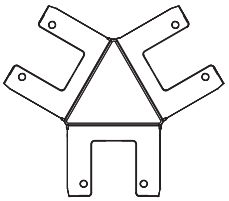

3

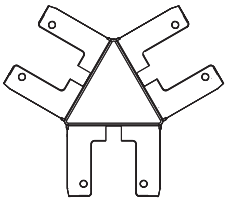

3A

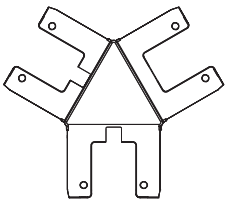

3B

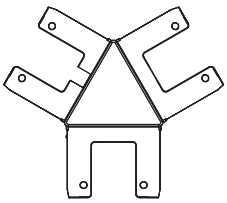

3C

**Specification Information**

Step 1.

**FZ136.** A

Step 2. Configuration

| | |
|---|---|
| **2** | connects into 2 frame top caps A |
| **2A** | connects into 2 frame top screens A |
| **2B** | connects into frame top screen left, frame top cap right A |
| **2C** | connects into frame top cap left and frame top screen right A |
| **3** | connects into 3 frame top caps A |
| **3A** | connects into 3 frame top screens A |
| **3B** | connects into frame top screen 2 sides, frame top cap 1 side A |
| **3C** | connects into frame top screen 1 side, frame top cap 2 sides A |

Step 3. Surface Material

| | |
|---|---|
| **P** | painted A |

Prices for Steps 1-3.

| | | P |
|---|---|---|
| **FZ136.** | **2** | $34 |
| | **2A** | $59 |
| | **2B** | $59 |
| | **2C** | $59 |
| | **3** | $34 |
| | **3A** | $59 |
| | **3B** | $59 |
| | **3C** | $59 |

Step 4. Surface Finish

Sand Texture Paint

| | | |
|---|---|---|
| **8Q** | folkstone grey A | +$0 |
| **91** | white A | +$0 |
| **98** | studio white A | +$0 |
| **BK** | black A | +$0 |
| **CL** | cool grey neutral A | +$0 |
| **G1** | graphite A | +$0 |
| **WL** | sandstone A | +$0 |
| **WN** | warm grey neutral A | +$0 |

Metallic Paint

| | | |
|---|---|---|
| **CN** | metallic champagne A | +$0 |
| **EH** | metallic bronze A | +$0 |
| **MS** | metallic silver A | +$0 |

# Open Base Tile FZ170.

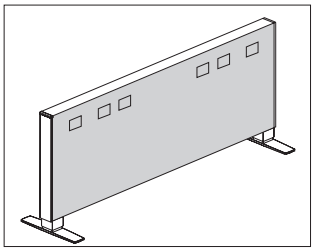

## Product Information

### Description

This tile attaches to 1 side of a frame and has a painted metal or tackable fabric surface. It is available with or without power and data access at the top power location. Tile is UL listed and NFPA classified. Attachment hardware included.

### Notes

Specify width of tile to match width of frame (FZ110.).

To access power and data, order power harness (FZ152.) separately.

For tackable fabric tile with cutouts for hardwired junction boxes (meets Chicago electrical code requirements), specify (O), (P), or (Q) cutout location options.

Painted metal tile with cutouts for hardwired junction boxes already meets Chicago electrical code requirements.

Tiles 24" wide and 30" wide do not support power and data access.

Tiles 36"-54" wide support power and data access at left-hand top and right-hand top of tile only.

Tiles 78" wide cover joined 48"- and 30"-wide frame pairs; power and data access is on 48"-wide frame side only.

Tiles 84" wide cover 2 42"-wide frames.

Tiles 96" wide cover 2 48"-wide frames.

When specifying tackable fabric, horizontal (R) option, fabric direction is horizontal (railroaded). Specify all tiles within the workstation to be the same fabric direction.

Fabric-covered tile accepts Customer's Own Material (COM). Yardage is estimated for directional, 54"-wide fabrics.

Height—Yardage
22"—0.60
29"—0.80

For tackable fabric, horizontal option (R):

Width—Yardage
24"—0.80
30"—1.00
36"—1.10
42"—1.30
48"—1.50
54"—1.60
60"—1.80
66"—2.00
72"—2.10
78"—2.30
84"—2.50
96"—2.80

For information on multiple quantities or directional fabrics, contact COM Department. See Order Information in appendices.

### Dimensions

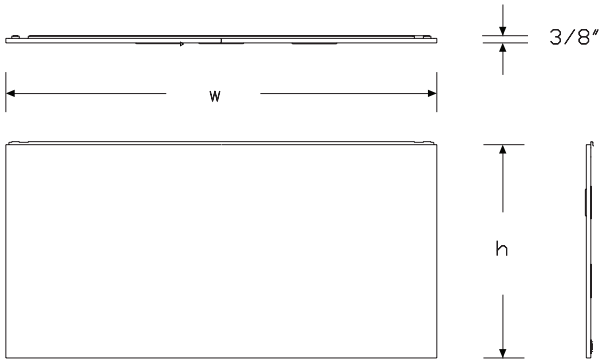


For 36",42",48",54" and 78" wide tiles

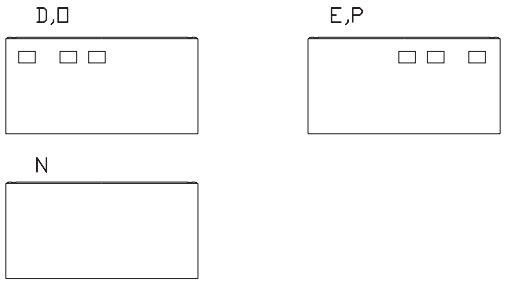


For 60",66",72",84" and 96" wide tiles

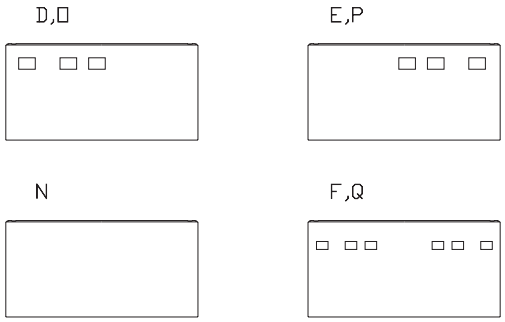

**Specification Information**

Step 1.

**FZ170.** A

Step 2. Surface Material

**T** fabric A
**R** fabric, horizontal A
**P** painted A

Step 3. Height

**22** 22" high A
**29** 29" high A

Step 4. Width

*For fabric (T)*

**24** 24" wide A
**30** 30" wide A
**36** 36" wide A
**42** 42" wide A
**48** 48" wide A

*For fabric, horizontal (R)*

**24** 24" wide A
**30** 30" wide A
**36** 36" wide A
**42** 42" wide A
**48** 48" wide A
**54** 54" wide A
**60** 60" wide A
**66** 66" wide A
**72** 72" wide A
**78** 78" wide A
**84** 84" wide A
**96** 96" wide A

*For painted (P)*

**24** 24" wide A
**30** 30" wide A
**36** 36" wide A
**42** 42" wide A
**48** 48" wide A
**54** 54" wide A
**60** 60" wide A
**66** 66" wide A
**72** 72" wide A

Step 5. Cutout Location

*For fabric (T), fabric, horizontal (R), or painted (P) with 24" wide (24) or 30" wide (30)*

**N** no cutout A

*For fabric (T) or fabric, horizontal (R) with 36" wide (36), 42" wide (42), 48" wide (48), 54" wide (54), or 78" wide (78)*

**N** no cutout A
**D** power/data cutouts at LH top of cladding A
**E** power/data cutouts at RH top of cladding A
**O** power/data cutouts at LH top of cladding (meets Chicago electrical code requirements) A
**P** power/data cutouts at RH top of cladding (meets Chicago electrical code requirements) A

*For fabric, horizontal (R) with 60" wide (60), 66" wide (66), 72" wide (72), 84" wide (84), or 96" wide (96)*

**N** no cutout A
**D** power/data cutouts at LH top of cladding A
**E** power/data cutouts at RH top of cladding A
**F** power/data cutouts in the LH and RH top of cladding A
**O** power/data cutouts at LH top of cladding (meets Chicago electrical code requirements) A
**P** power/data cutouts at RH top of cladding (meets Chicago electrical code requirements) A
**Q** power/data cutouts in the LH and RH top of cladding (meets Chicago electrical code requirements) A

*For painted (P) with 36" wide (36), 42" wide (42), 48" wide (48), or 54" wide (54)*

**N** no cutout A
**D** power/data cutouts at LH top of cladding A
**E** power/data cutouts at RH top of cladding A

*For painted (P) with 60" wide (60), 66" wide (66), or 72" wide (72)*

**N** no cutout A
**D** power/data cutouts at LH top of cladding A
**E** power/data cutouts at RH top of cladding A
**F** power/data cutouts in the LH and RH top of cladding A

Prices for Steps 1-5.

| | | | 24N | 30N | 36N | 36D | 36E | 36O |
|---|---|---|---|---|---|---|---|---|
| **FZ170.** | **T** | **22** | $144 | 154 | 166 | 207 | 207 | 207 |
| | | **29** | $147 | 158 | 169 | 207 | 211 | 211 |
| | **R** | **22** | $144 | 154 | 166 | 207 | 207 | 207 |
| | | **29** | $147 | 158 | 169 | 211 | 211 | 211 |

| | | | | | | | |
|---|---|---|---|---|---|---|---|
| P | 22 | $202 | 216 | 232 | 290 | 290 | — |
| | 29 | $206 | 220 | 237 | 295 | 295 | — |

| | | 36P | 42N | 42D | 42E | 42O | 42P |
|---|---|---|---|---|---|---|---|
| FZ170. T | 22 | $207 | 162 | 203 | 203 | 203 | 203 |
| | 29 | $211 | 165 | 203 | 206 | 206 | 206 |
| R | 22 | $207 | 162 | 203 | 203 | 203 | 203 |
| | 29 | $211 | 165 | 206 | 206 | 206 | 206 |
| P | 22 | — | $226 | 284 | 284 | — | — |
| | 29 | — | $231 | 289 | 289 | — | — |

| | | 48N | 48D | 48E | 48O | 48P | 54N |
|---|---|---|---|---|---|---|---|
| FZ170. T | 22 | $172 | 214 | 214 | 214 | 214 | — |
| | 29 | $175 | 214 | 217 | 217 | 217 | — |
| R | 22 | $172 | 214 | 214 | 214 | 214 | 257 |
| | 29 | $175 | 217 | 217 | 217 | 217 | 263 |
| P | 22 | $240 | 298 | 298 | — | — | 360 |
| | 29 | $245 | 303 | 303 | — | — | 369 |

| | | 54D | 54E | 54O | 54P | 60N | 60D |
|---|---|---|---|---|---|---|---|
| FZ170. R | 22 | $299 | 299 | 299 | 299 | 277 | 318 |
| | 29 | $304 | 304 | 304 | 304 | 282 | 323 |
| P | 22 | $419 | 419 | — | — | 386 | 444 |
| | 29 | $427 | 427 | — | — | 394 | 452 |

| | | 60E | 60F | 60O | 60P | 60Q | 66N |
|---|---|---|---|---|---|---|---|
| FZ170. R | 22 | $318 | 328 | 318 | 318 | 328 | 287 |
| | 29 | $323 | 333 | 323 | 323 | 333 | 293 |
| P | 22 | $444 | 458 | — | — | — | 401 |
| | 29 | $452 | 467 | — | — | — | 409 |

| | | 66D | 66E | 66F | 66O | 66P | 66Q |
|---|---|---|---|---|---|---|---|
| FZ170. R | 22 | $328 | 328 | 338 | 328 | 328 | 338 |
| | 29 | $334 | 334 | 345 | 334 | 334 | 345 |
| P | 22 | $459 | 459 | 474 | — | — | — |
| | 29 | $468 | 468 | 482 | — | — | — |

| | | 72N | 72D | 72E | 72F | 72O | 72P |
|---|---|---|---|---|---|---|---|
| FZ170. R | 22 | $298 | 339 | 339 | 350 | 339 | 339 |
| | 29 | $304 | 346 | 346 | 356 | 346 | 346 |
| P | 22 | $418 | 475 | 475 | 489 | — | — |
| | 29 | $427 | 484 | 484 | 499 | — | — |

| | | 72Q | 78N | 78D | 78E | 78O | 78P |
|---|---|---|---|---|---|---|---|
| FZ170. R | 22 | $350 | 306 | 348 | 348 | 348 | 348 |
| | 29 | $356 | 313 | 354 | 354 | 354 | 354 |

| | | 84N | 84D | 84E | 84F | 84O | 84P |
|---|---|---|---|---|---|---|---|
| FZ170. R | 22 | $316 | 357 | 357 | 368 | 357 | 357 |
| | 29 | $322 | 364 | 364 | 374 | 364 | 364 |

| | | 84Q | 96N | 96D | 96E | 96F | 96O |
|---|---|---|---|---|---|---|---|
| FZ170. R | 22 | $368 | 335 | 377 | 377 | 387 | 377 |
| | 29 | $374 | 343 | 384 | 384 | 394 | 384 |

| | | 96P | 96Q |
|---|---|---|---|
| FZ170. R | 22 | $377 | 387 |
| | 29 | $384 | 394 |

## Step 6. Surface Finish

*For painted (P)*

| | | |
|---|---|---|
| **8Q** | folkstone grey A | +$0 |
| **91** | white A | +$0 |
| **98** | studio white A | +$0 |
| **BK** | black A | +$0 |
| **CL** | cool grey neutral A | +$0 |
| **G1** | graphite A | +$0 |
| **WL** | sandstone A | +$0 |
| **WN** | warm grey neutral A | +$0 |

*For painted (P)*

| | | |
|---|---|---|
| **CN** | metallic champagne A | +$0 |
| **EH** | metallic bronze A | +$0 |
| **MS** | metallic silver A | +$0 |

*For fabric (T) AND fabric, horizontal (R)*

| | 22 | 29 |
|---|---|---|
| Price Category 1 | +$0 | 0 |
| Price Category 2 | +$13 | 19 |
| Price Category 3 | +$21 | 33 |
| Price Category 4 | +$33 | 51 |
| Price Category 5 | +$69 | 103 |
| Price Category B | +$35 | 52 |
| Price Category C | +$52 | 79 |
| Price Category D | +$69 | 103 |
| Price Category E | +$84 | 128 |
| Price Category F | +$122 | 174 |
| Price Category G | +$158 | 226 |

| Step 7. Receptacle Trim Finish | | |
|---|---|---|
| *For power/data cutouts at LH top of cladding (D), power/data cutouts at RH top of cladding (E), power/data cutouts in the LH and RH top of cladding (F), power/data cutouts at LH top of cladding (meets Chicago electrical code requirements) (O), power/data cutouts at RH top of cladding (meets Chicago electrical code requirements) (P), or power/data cutouts in the LH and RH top of cladding (meets Chicago electrical code requirements) (Q)* | | |
| **8Q** | folkstone grey A | +$0 |
| **91** | white A | +$0 |
| **98** | studio white A | +$0 |
| **BK** | black A | +$0 |
| **CL** | cool grey neutral A | +$0 |
| **G1** | graphite A | +$0 |
| **WL** | sandstone A | +$0 |
| **WN** | warm grey neutral A | +$0 |

# To-The-Floor Tiles FZ375.

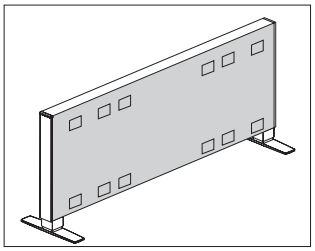

## Product Information

### Description

This tile attaches to 1 side of a frame and has a painted metal or tackable fabric surface. It is available with or without power and data access at the top and/or bottom power locations. Tile is UL listed and NFPA classified. Attachment hardware included.

### Notes

Specify width of tile to match width of frame (FZ110.).

To access power and data, order power harness (FZ152.) separately.

For tackable fabric tile with cutouts for hardwired junction boxes (meets Chicago electrical code requirements), specify (O), (P), (Q), (S), (T), (U), (V), (W), or (X) cutout location options.

Painted metal tile with cutouts for hardwired junction boxes already meets Chicago electrical code requirements.

Tiles 24″ wide and 30″ wide do not support power and data access.

Tiles 36″-54″ wide support power and data access at left-hand top and right-hand top of tile only.

Tiles 78″ wide cover joined 48″- and 30″-wide frame pairs; power and data access is on 48″-wide frame side only.

Tiles 84″ wide cover 2 42″-wide frames.

Tiles 96″ wide cover 2 48″-wide frames.

When specifying tackable fabric, horizontal (R) option, fabric direction is horizontal (railroaded). Specify all tiles within the workstation to be the same fabric direction.

Fabric-covered tile accepts Customer's Own Material (COM). Yardage is estimated for directional, 54″-wide fabrics.

Height—Yardage
22″—0.70
29″—0.90

For tackable fabric, horizontal option (R):

Width—Yardage
24″—0.80
30″—1.00
36″—1.10
42″—1.30
48″—1.50
54″—1.60
60″—1.80
66″—2.00
72″—2.10
78″—2.30
84″—2.50
96″—2.80

For information on multiple quantities or directional fabrics, contact COM Department. See Order Information in appendices.

### Dimensions

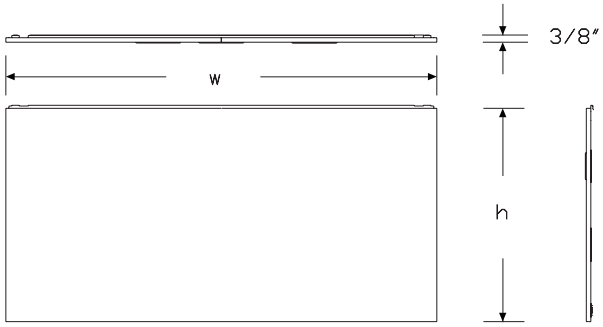


For 36″,42″,48″,54″ and 78″ wide tiles

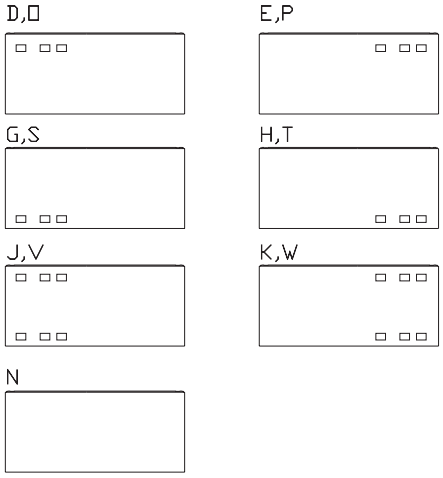


For 60″,66″,72″,84″ and 96″ wide tiles

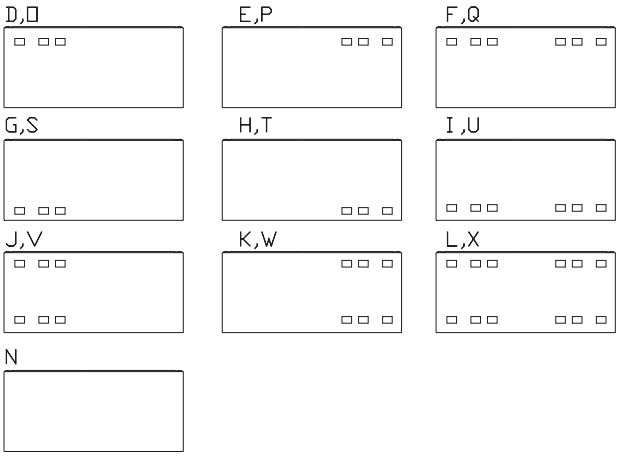

**Specification Information**

Step 1.

**FZ375.** A

Step 2. Surface Material

**T** fabric A
**R** fabric, horizontal A
**P** painted A

Step 3. Height

**22** 22" high A
**29** 29" high A

Step 4. Width

*For fabric (T)*

**24** 24" wide A
**30** 30" wide A
**36** 36" wide A
**42** 42" wide A
**48** 48" wide A

*For fabric, horizontal (R)*

**24** 24" wide A
**30** 30" wide A
**36** 36" wide A
**42** 42" wide A
**48** 48" wide A
**54** 54" wide A
**60** 60" wide A
**66** 66" wide A
**72** 72" wide A
**78** 78" wide A
**84** 84" wide A
**96** 96" wide A

*For painted (P)*

**24** 24" wide A
**30** 30" wide A
**36** 36" wide A
**42** 42" wide A
**48** 48" wide A
**54** 54" wide A
**60** 60" wide A
**66** 66" wide A
**72** 72" wide A

Step 5. Cutout Location

*For fabric (T), fabric, horizontal (R), or painted (P) with 24" wide (24) or 30" wide (30)*

**N** no cutout A

*For fabric (T) or fabric, horizontal (R) with 36" wide (36), 42" wide (42), 48" wide (48), 54" wide (54), or 78" wide (78)*

**N** no cutout A
**D** power/data cutouts at LH top of cladding A
**E** power/data cutouts at RH top of cladding A
**G** power/data cutouts at LH bottom of cladding A
**H** power/data cutouts at RH bottom of cladding A
**J** power/data cutouts in the LH top and bottom of cladding A
**K** power/data cutouts in the RH top and bottom of cladding A
**O** power/data cutouts at LH top of cladding (meets Chicago electrical code requirements) A
**P** power/data cutouts at RH top of cladding (meets Chicago electrical code requirements) A
**S** power/data cutouts at LH bottom fo cladding (meets Chicago electrical code requirements) A
**T** power/data cutouts at RH bottom of cladding (meets Chicago electrical code requirements) A
**V** power/data cutouts in the LH top and bottom of cladding (meets Chicago electrical code requirements) A
**W** power/data cutouts in the RH top and bottom of cladding (meets Chicago electrical code requirements) A

*For fabric, horizontal (R) with 60" wide (60), 66" wide (66), 72" wide (72), 84" wide (84), or 96" wide (96)*

**N** no cutout A
**D** power/data cutouts at LH top of cladding A
**E** power/data cutouts at RH top of cladding A
**F** power/data cutouts in the LH and RH top of cladding A
**G** power/data cutouts at LH bottom of cladding A
**H** power/data cutouts at RH bottom of cladding A
**I** power/data cutouts in the LH and RH bottom of cladding A
**J** power/data cutouts in the LH top and bottom of cladding A
**K** power/data cutouts in the RH top and bottom of cladding A
**L** power/data cutouts in the LH and RH top and bottom of cladding A
**O** power/data cutouts at LH top of cladding (meets Chicago electrical code requirements) A
**P** power/data cutouts at RH top of cladding (meets Chicago electrical code requirements) A
**Q** power/data cutouts in the LH and RH top of cladding (meets Chicago electrical code requirements) A
**S** power/data cutouts at LH bottom fo cladding (meets Chicago electrical code requirements) A
**T** power/data cutouts at RH bottom of cladding (meets Chicago electrical code requirements) A
**U** power/data cutouts in the LH and RH bottom of cladding (meets Chicago electrical code requirements) A
**V** power/data cutouts in the LH top and bottom of cladding (meets Chicago electrical code requirements) A
**W** power/data cutouts in the RH top and bottom of cladding (meets Chicago electrical code requirements) A
**X** power/data cutouts in the LH and RH top and bottom of cladding (meets Chicago electrical code requirements) A

*For painted (P) with 36" wide (36), 42" wide (42), 48" wide (48), or 54" wide (54)*

**N** no cutout A
**D** power/data cutouts at LH top of cladding A
**E** power/data cutouts at RH top of cladding A
**G** power/data cutouts at LH bottom of cladding A
**H** power/data cutouts at RH bottom of cladding A
**J** power/data cutouts in the LH top and bottom of cladding A
**K** power/data cutouts in the RH top and bottom of cladding A

*For painted (P) with 60" wide (60), 66" wide (66), or 72" wide (72)*

**N** no cutout A
**D** power/data cutouts at LH top of cladding A
**E** power/data cutouts at RH top of cladding A
**F** power/data cutouts in the LH and RH top of cladding A
**G** power/data cutouts at LH bottom of cladding A
**H** power/data cutouts at RH bottom of cladding A
**I** power/data cutouts in the LH and RH bottom of cladding A
**J** power/data cutouts in the LH top and bottom of cladding A
**K** power/data cutouts in the RH top and bottom of cladding A
**L** power/data cutouts in the LH and RH top and bottom of cladding A

Prices for Steps 1-5.

| | | | 24N | 30N | 36N | 36D | 36E | 36G |
|---|---|---|---|---|---|---|---|---|
| FZ375. | T | 22 | $178 | 186 | 197 | 238 | 238 | 238 |
| | | 29 | $183 | 192 | 202 | 243 | 243 | 243 |
| | R | 22 | $178 | 186 | 197 | 238 | 238 | 238 |
| | | 29 | $183 | 192 | 202 | 243 | 243 | 243 |
| | P | 22 | $248 | 261 | 276 | 333 | 333 | 333 |
| | | 29 | $256 | 269 | 283 | 341 | 341 | 341 |

| | | | 36H | 36J | 36K | 36O | 36P | 36S |
|---|---|---|---|---|---|---|---|---|
| FZ375. | T | 22 | $238 | 248 | 248 | 238 | 238 | 238 |
| | | 29 | $243 | 253 | 253 | 243 | 243 | 243 |
| | R | 22 | $238 | 248 | 248 | 238 | 238 | 238 |
| | | 29 | $243 | 253 | 253 | 243 | 243 | 243 |
| | P | 22 | $333 | 348 | 348 | — | — | — |
| | | 29 | $341 | 355 | 355 | — | — | — |

| | | | 36T | 36V | 36W | 42N | 42D | 42E |
|---|---|---|---|---|---|---|---|---|
| FZ375. | T | 22 | $238 | 248 | 248 | 207 | 248 | 248 |
| | | 29 | $243 | 253 | 253 | 213 | 253 | 253 |
| | R | 22 | $238 | 248 | 248 | 207 | 248 | 248 |
| | | 29 | $243 | 253 | 253 | 213 | 253 | 253 |
| | P | 22 | — | — | — | $290 | 348 | 348 |
| | | 29 | — | — | — | $297 | 355 | 355 |

| | | | 42G | 42H | 42J | 42K | 42O | 42P |
|---|---|---|---|---|---|---|---|---|
| FZ375. | T | 22 | $248 | 248 | 258 | 258 | 248 | 248 |
| | | 29 | $253 | 253 | 264 | 264 | 253 | 253 |
| | R | 22 | $248 | 248 | 258 | 258 | 248 | 248 |
| | | 29 | $253 | 253 | 264 | 264 | 253 | 253 |
| | P | 22 | $348 | 348 | 362 | 362 | — | — |
| | | 29 | $355 | 355 | 370 | 370 | — | — |

| | | | 42S | 42T | 42V | 42W | 48N | 48D |
|---|---|---|---|---|---|---|---|---|
| FZ375. | T | 22 | $248 | 248 | 258 | 258 | 216 | 256 |
| | | 29 | $253 | 253 | 264 | 264 | 221 | 262 |
| | R | 22 | $248 | 248 | 258 | 258 | 216 | 256 |
| | | 29 | $253 | 253 | 264 | 264 | 221 | 262 |
| | P | 22 | — | — | — | — | $301 | 359 |
| | | 29 | — | — | — | — | $308 | 367 |

| | | | 48E | 48G | 48H | 48J | 48K | 48O |
|---|---|---|---|---|---|---|---|---|
| FZ375. | T | 22 | $256 | 256 | 256 | 268 | 268 | 256 |
| | | 29 | $262 | 262 | 262 | 273 | 273 | 262 |
| | R | 22 | $256 | 256 | 256 | 268 | 268 | 256 |
| | | 29 | $262 | 262 | 262 | 273 | 273 | 262 |
| | P | 22 | $359 | 359 | 359 | 374 | 374 | — |
| | | 29 | $367 | 367 | 367 | 381 | 381 | — |

| | | | 48P | 48S | 48T | 48V | 48W | 54N |
|---|---|---|---|---|---|---|---|---|
| FZ375. | T | 22 | $256 | 256 | 256 | 268 | 268 | — |
| | | 29 | $262 | 262 | 262 | 273 | 273 | — |
| | R | 22 | $256 | 256 | 256 | 268 | 268 | 243 |
| | | 29 | $262 | 262 | 262 | 273 | 273 | 248 |
| | P | 22 | — | — | — | — | — | $341 |
| | | 29 | — | — | — | — | — | $348 |

| | | | 54D | 54E | 54G | 54H | 54J | 54K |
|---|---|---|---|---|---|---|---|---|
| FZ375. | R | 22 | $285 | 285 | 285 | 285 | 295 | 295 |
| | | 29 | $290 | 290 | 290 | 290 | 300 | 300 |
| | P | 22 | $398 | 398 | 398 | 398 | 412 | 412 |
| | | 29 | $405 | 405 | 405 | 405 | 421 | 421 |

| | | | 54O | 54P | 54S | 54T | 54V | 54W |
|---|---|---|---|---|---|---|---|---|
| FZ375. | R | 22 | $285 | 285 | 285 | 285 | 295 | 295 |
| | | 29 | $290 | 290 | 290 | 290 | 300 | 300 |

| | | | 60N | 60D | 60E | 60F | 60G | 60H |
|---|---|---|---|---|---|---|---|---|
| FZ375. | R | 22 | $275 | 316 | 316 | 326 | 316 | 316 |
| | | 29 | $280 | 321 | 321 | 331 | 321 | 321 |
| | P | 22 | $384 | 442 | 442 | 456 | 442 | 442 |
| | | 29 | $391 | 449 | 449 | 463 | 449 | 449 |

| | | | 60I | 60J | 60K | 60L | 60O | 60P |
|---|---|---|---|---|---|---|---|---|
| FZ375. | R | 22 | $326 | 326 | 326 | 336 | 316 | 316 |
| | | 29 | $331 | 331 | 331 | 342 | 321 | 321 |
| | P | 22 | $456 | 456 | 456 | 471 | — | — |
| | | 29 | $463 | 463 | 463 | 478 | — | — |

| | | | 60Q | 60S | 60T | 60U | 60V | 60W |
|---|---|---|---|---|---|---|---|---|
| FZ375. | R | 22 | $326 | 316 | 316 | 326 | 326 | 326 |
| | | 29 | $331 | 321 | 321 | 331 | 331 | 331 |

| | | | 60X | 66N | 66D | 66E | 66F | 66G |
|---|---|---|---|---|---|---|---|---|
| FZ375. | R | 22 | $336 | 295 | 336 | 336 | 347 | 336 |
| | | 29 | $342 | 300 | 342 | 342 | 352 | 342 |
| | P | 22 | — | $412 | 471 | 471 | 485 | 471 |
| | | 29 | — | $421 | 478 | 478 | 493 | 478 |

| | | | 66H | 66I | 66J | 66K | 66L | 66O |
|---|---|---|---|---|---|---|---|---|
| FZ375. | R | 22 | $336 | 347 | 347 | 347 | 357 | 336 |
| | | 29 | $342 | 352 | 352 | 352 | 362 | 342 |
| | P | 22 | $471 | 485 | 485 | 485 | 500 | — |
| | | 29 | $478 | 493 | 493 | 493 | 507 | — |

| | | | 66P | 66Q | 66S | 66T | 66U | 66V |
|---|---|---|---|---|---|---|---|---|
| FZ375. | R | 22 | $336 | 347 | 336 | 336 | 347 | 347 |
| | | 29 | $342 | 352 | 342 | 342 | 352 | 352 |

| | | | 66W | 66X | 72N | 72D | 72E | 72F |
|---|---|---|---|---|---|---|---|---|
| FZ375. | R | 22 | $347 | 357 | 305 | 347 | 347 | 357 |
| | | 29 | $352 | 362 | 310 | 352 | 352 | 362 |
| | P | 22 | — | — | $428 | 485 | 485 | 500 |
| | | 29 | — | — | $435 | 493 | 493 | 507 |

| | | | 72G | 72H | 72I | 72J | 72K | 72L |
|---|---|---|---|---|---|---|---|---|
| FZ375. | R | 22 | $347 | 347 | 357 | 357 | 357 | 368 |
| | | 29 | $352 | 352 | 362 | 362 | 362 | 373 |
| | P | 22 | $485 | 485 | 500 | 500 | 500 | 514 |
| | | 29 | $493 | 493 | 507 | 507 | 507 | 522 |

| | | | 72O | 72P | 72Q | 72S | 72T | 72U |
|---|---|---|---|---|---|---|---|---|
| FZ375. | R | 22 | $347 | 347 | 357 | 347 | 347 | 357 |
| | | 29 | $352 | 352 | 362 | 352 | 352 | 362 |

| | | | 72V | 72W | 72X | 78N | 78D | 78E |
|---|---|---|---|---|---|---|---|---|
| FZ375. | R | 22 | $357 | 357 | 368 | 316 | 357 | 357 |
| | | 29 | $362 | 362 | 373 | 321 | 362 | 362 |

| | | | 78G | 78H | 78J | 78K | 78O | 78P |
|---|---|---|---|---|---|---|---|---|
| FZ375. | R | 22 | $357 | 357 | 368 | 368 | 357 | 357 |
| | | 29 | $362 | 362 | 373 | 373 | 362 | 362 |

| | | | 78S | 78T | 78V | 78W | 84N | 84D |
|---|---|---|---|---|---|---|---|---|
| FZ375. | R | 22 | $357 | 357 | 368 | 368 | 321 | 362 |
| | | 29 | $362 | 362 | 373 | 373 | 326 | 368 |

| | | 84E | 84F | 84G | 84H | 84I | 84J |
|---|---|---|---|---|---|---|---|
| **FZ375. R** | **22** | $362 | 373 | 362 | 362 | 373 | 373 |
| | **29** | $368 | 378 | 368 | 368 | 378 | 378 |

| | | 84K | 84L | 84O | 84P | 84Q | 84S |
|---|---|---|---|---|---|---|---|
| **FZ375. R** | **22** | $373 | 383 | 362 | 362 | 373 | 362 |
| | **29** | $378 | 388 | 368 | 368 | 378 | 368 |

| | | 84T | 84U | 84V | 84W | 84X | 96N |
|---|---|---|---|---|---|---|---|
| **FZ375. R** | **22** | $362 | 373 | 373 | 373 | 383 | 342 |
| | **29** | $368 | 378 | 378 | 378 | 388 | 347 |

| | | 96D | 96E | 96F | 96G | 96H | 96I |
|---|---|---|---|---|---|---|---|
| **FZ375. R** | **22** | $383 | 383 | 393 | 383 | 383 | 393 |
| | **29** | $388 | 388 | 398 | 388 | 388 | 398 |

| | | 96J | 96K | 96L | 96O | 96P | 96Q |
|---|---|---|---|---|---|---|---|
| **FZ375. R** | **22** | $393 | 393 | 403 | 383 | 383 | 393 |
| | **29** | $398 | 398 | 408 | 388 | 388 | 398 |

| | | 96S | 96T | 96U | 96V | 96W | 96X |
|---|---|---|---|---|---|---|---|
| **FZ375. R** | **22** | $383 | 383 | 393 | 393 | 393 | 403 |
| | **29** | $388 | 388 | 398 | 398 | 398 | 408 |

Step 6. Surface Finish

*For painted (P)*

| | | |
|---|---|---|
| **BK** | black A | +$0 |
| **8Q** | folkstone grey A | +$0 |
| **91** | white A | +$0 |
| **98** | studio white A | +$0 |
| **CL** | cool grey neutral A | +$0 |
| **G1** | graphite A | +$0 |
| **WL** | sandstone A | +$0 |
| **WN** | warm grey neutral A | +$0 |

*For painted (P)*

| | | |
|---|---|---|
| **CN** | metallic champagne A | +$0 |
| **EH** | metallic bronze A | +$0 |
| **MS** | metallic silver A | +$0 |

*For fabric (T) AND fabric, horizontal (R)*

| | 22 | 29 |
|---|---|---|
| Price Category 1 | +$0 | 0 |
| Price Category 2 | +$13 | 19 |
| Price Category 3 | +$21 | 33 |
| Price Category 4 | +$33 | 51 |
| Price Category 5 | +$69 | 103 |
| Price Category B | +$35 | 52 |
| Price Category C | +$52 | 79 |
| Price Category D | +$69 | 103 |
| Price Category E | +$84 | 128 |
| Price Category F | +$122 | 174 |
| Price Category G | +$158 | 226 |

Step 7. Receptacle Trim Finish

*For power/data cutouts at LH top of cladding (D), power/data cutouts at RH top of cladding (E), power/data cutouts in the LH and RH top of cladding (F), power/data cutouts at LH bottom of cladding (G), power/data cutouts at RH bottom of cladding (H), power/data cutouts in the LH top and bottom of cladding (J), power/data cutouts in the LH and RH bottom of cladding (I), power/data cutouts in the RH top and bottom of cladding (K), power/data cutouts at LH top of cladding (meets Chicago electrical code requirements) (O), power/data cutouts at RH top of cladding (meets Chicago electrical code requirements) (P), power/data cutouts in the LH and RH top and bottom of cladding (L), power/data cutouts at LH bottom fo cladding (meets Chicago electrical code requirements) (S), power/data cutouts at RH bottom of cladding (meets Chicago electrical code requirements) (T), power/data cutouts in the LH top and bottom of cladding (meets Chicago electrical code requirements) (V), power/data cutouts in the LH and RH top of cladding (meets Chicago electrical code requirements) (Q), power/data cutouts in the RH top and bottom of cladding (meets Chicago electrical code requirements) (W), power/data cutouts in the LH and RH bottom of cladding (meets Chicago electrical code requirements) (U), or power/data cutouts in the LH and RH top and bottom of cladding (meets Chicago electrical code requirements) (X)*

| | | |
|---|---|---|
| **8Q** | folkstone grey A | +$0 |
| **91** | white A | +$0 |
| **98** | studio white A | +$0 |
| **BK** | black A | +$0 |
| **CL** | cool grey neutral A | +$0 |
| **G1** | graphite A | +$0 |
| **WL** | sandstone A | +$0 |
| **WN** | warm grey neutral A | +$0 |

# Power Entry, Internal Direct Connect - Floor

FZ144.

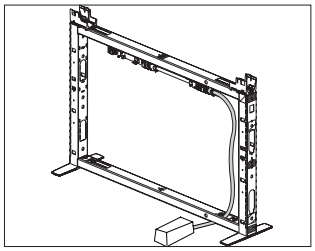

## Product Information

Description

This power entry connects a building's electrical supply from a wall, floor or column to a powered frame. It enters the frame through one of the rectangular cutouts in the bottom rail of the frame. The power entry plugs into the side of a power harness and includes a cable that can be field cut to the appropriate length. Power entry is UL listed and Canadian UL listed.

Notes

Power entry does not take up a receptacle location when connecting to the frame harness.

Power entry connects directly to the harness (FZ150.) in the top or bottom power location.

Power entry cannot route through a connector.

For an application using to-the-floor tiles (FZ375.), order power entry, external direct connect (FZ140.).

Licensed electrician must wire power entry.

PVC coated liquid tight conduit.

Dimensions

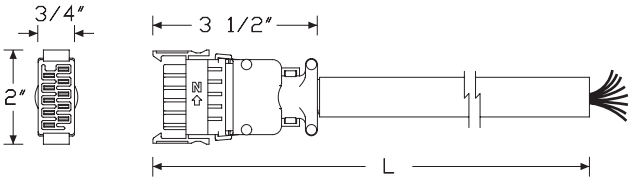


## Specification Information

Step 1.

**FZ144.** A

Step 2. Configuration

**08** 8-wire, 4-circuit, shared neutral A

**10** 10-wire, 4-circuit, separate neutrals A

Step 3. Length

**06** 6' long A

**12** 12' long A

**18** 18' long A

**24** 24' long A

Prices for Steps 1-3.

| | | 06 | 12 | 18 | 24 |
|---|---|---|---|---|---|
| **FZ144.** | **08** | $253 | 292 | 360 | 428 |
| | **10** | $253 | 292 | 360 | 428 |

# Power Entry, External Direct Connect FZ140.

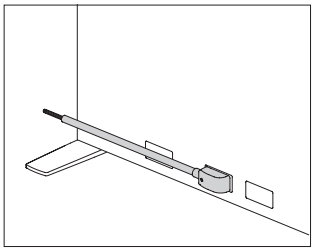



## Product Information

Description

This power entry connects a building's electrical supply from a wall, floor, or column to a frame's power harness. It plugs directly into a receptacle location to distribute up to 4 20-amp circuits. The power entry is manufactured in a right-hand direction but can be field converted to a left-hand direction. The cable is available in 4 lengths and can be field cut to the appropriate length. Power entry is UL listed and Canadian UL listed.

Notes

Power entry uses 1 receptacle location.

Licensed electrician must wire power entry.

PVC coated liquid tight conduit.

Dimensions

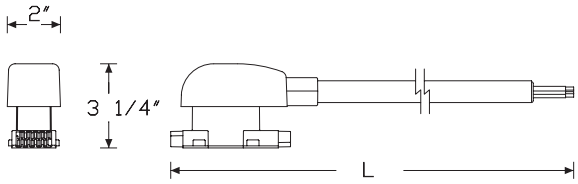


## Specification Information

Step 1.

**FZ140.** A

Step 2. Configuration

**08** 8-wire, 4-circuit, shared neutral A

**10** 10-wire, 4-circuit, separate neutrals A

Step 3. Length

**06** 6′ long A

**12** 12′ long A

**18** 18′ long A

**24** 24′ long A

Prices for Steps 1-3.

| | | 06 | 12 | 18 | 24 |
|---|---|---|---|---|---|
| **FZ140.** | **08** | $207 | 276 | 351 | 425 |
| | **10** | $207 | 276 | 351 | 425 |

# Power Entry, New York - Floor FZ141.

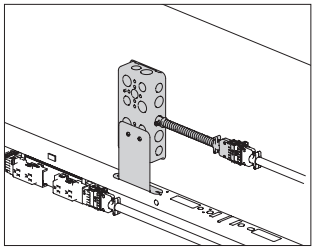

## Product Information

Description

This floor power entry connects a building's electrical supply from a wall, floor or column to the power harness. It connects to the modular connection location on the end of a power harness, and includes a junction box. Power entry is UL listed and Canadian UL listed.

Notes

Licensed electrician must wire power entry.

Power entry uses 1 modular connection location on each end of adjacent power harnesses (FZ150.).

Power harness (FZ150.) is required. Order separately.

Dimensions

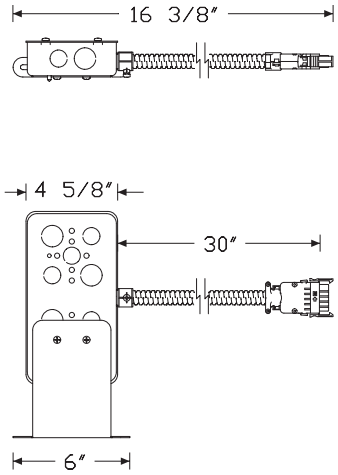


## Specification Information

Step 1.

**FZ141.** A

Step 2. Configuration

| | |
|---|---|
| **08** | 8-wire, 4-circuit, shared neutral A |
| **10** | 10-wire, 4-circuit, separate neutrals A |

Prices for Steps 1-2.

| | | |
|---|---|---|
| **FZ141.** | **08** | $394 |
| | **10** | $394 |

# Power Entry - Ceiling FZ142.

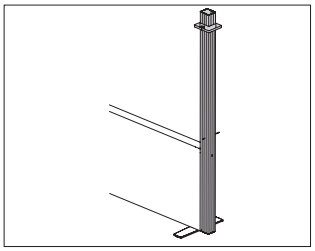

## Product Information

### Description

This power entry connects a ceiling electrical supply to the end of a frame. It distributes up to 4 20-amp circuits. The power entry comes with a 10'-high pole that can be field cut to the appropriate length, ceiling trim, connecting hardware conduit, and factory supplied electrical harness. Power entry plugs into the end of the harness. Power entry is UL listed and Canadian UL listed.

### Notes

When using ceiling power entry on end of run, finished end is not required.

Power entry uses 1 modular connection location on each end of adjacent power harnesses (FZ150.).

Licensed electrician must wire power entry.

Power harness (FZ150.) is required. Order separately.

### Dimensions

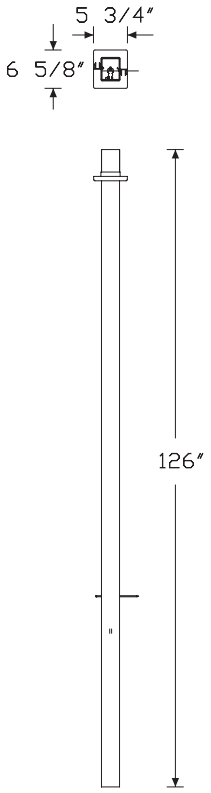


## Specification Information

### Step 1.

**FZ142.** A

### Step 2. Frame Height

| | |
|---|---|
| **22** | 22″ high A |
| **29** | 29″ high A |

### Step 3. Base Option

| | |
|---|---|
| **A** | open base A |
| **B** | to-the-floor A |

### Step 4. Power Connection

| | |
|---|---|
| **08** | 8-wire, 4-circuit, shared neutral A |
| **10** | 10-wire, 4-circuit, separate neutrals A |
| **N** | nonpowered A |

### Prices for Steps 1-4.

| | | | 08 | 10 | N |
|---|---|---|---|---|---|
| **FZ142.** | **22** | **A** | $812 | 812 | 454 |
| | | **B** | $812 | 812 | 454 |
| | **29** | **A** | $812 | 812 | 454 |
| | | **B** | $812 | 812 | 454 |

### Step 5. Finish

| | | |
|---|---|---|
| **8Q** | folkstone grey A | +$0 |
| **91** | white A | +$0 |
| **98** | studio white A | +$0 |
| **BK** | black A | +$0 |
| **CL** | cool grey neutral A | +$0 |
| **G1** | graphite A | +$0 |
| **WL** | sandstone A | +$0 |
| **WN** | warm grey neutral A | +$0 |

# Power Harness FZ150.

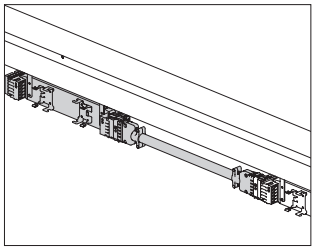

## Product Information

Description

This power harness converts a nonpowered frame to a powered frame at the top and/or base location. 36"-54" wide harnesses have up to 4 20-amp circuits and provide up to 4 receptacle locations on each side of the frame. 60"-96" wide harnesses have up to 4 20-amp circuits and provide up to 8 receptacle locations on each side of the frame. Harness is UL listed and Canadian UL listed.

Notes

Specify width of power harness to match width of channel structure.

Specify 1 harness to fill a top power location.

Specify 1 harness to fill a bottom power location.

To connect harnesses through frames, specify power jumpers (FZ154.) separately.

36"-54" wide harnesses have up to 4 20-amp circuits and provide up to 4 receptacle locations on each side of the frame.

60"-96" wide harnesses have up to 4 20-amp circuits and provide up to 8 receptacle locations on each side of the frame.

When using an 84"-wide tile, specify 1 84"-wide harness.

When using a 96"-wide tile, specify 1 96"-wide harness.

Dimensions

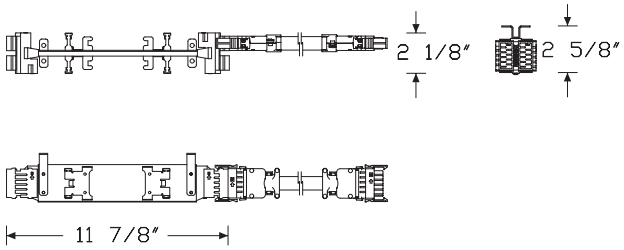


36" - 54" wide

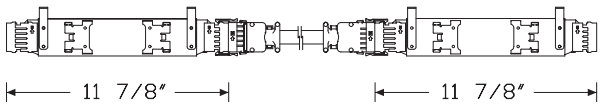


60" - 96" wide

## Specification Information

Step 1.

**FZ150.** A

Step 2. Configuration

| | |
|---|---|
| **08** | 8-wire, 4-circuit, shared neutral A |
| **10** | 10-wire, 4-circuit, separate neutrals A |

Step 3. Frame Width

| | |
|---|---|
| **36** | 36" wide A |
| **42** | 42" wide A |
| **48** | 48" wide A |
| **54** | 54" wide A |
| **60** | 60" wide A |
| **66** | 66" wide A |
| **72** | 72" wide A |
| **84** | 84" wide A |
| **96** | 96" wide A |

Prices for Steps 1-3.

| | | 36 | 42 | 48 | 54 | 60 | 66 |
|---|---|---|---|---|---|---|---|
| **FZ150.** | **08** | $161 | 171 | 192 | 213 | 253 | 275 |
| | **10** | $161 | 171 | 192 | 213 | 253 | 275 |

| | | 72 | 84 | 96 |
|---|---|---|---|---|
| **FZ150.** | **08** | $295 | 336 | 378 |
| | **10** | $295 | 336 | 378 |

# Power Jumper FZ154.

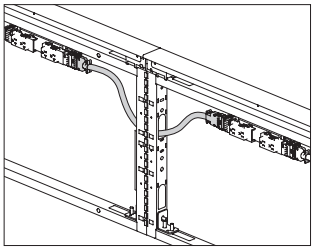

## Product Information

### Description

This power jumper connects power horizontally or vertically from 1 power harness to another. It connects power within a frame or between adjacent frames. The power jumper connects into the end of a harness; it does not connect into a receptacle location. Power jumper is UL listed and Canadian UL listed.

### Notes

Jumpers are optimized in length to run through 90° and 120° connectors.

Order power harness (FZ150.) separately.

### Dimensions

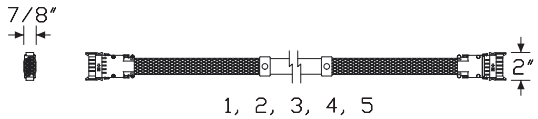


## Specification Information

### Step 1.

**FZ154.** A

### Step 2. Configuration

**08** 8-wire, 4-circuit, shared neutral A

**10** 10-wire, 4-circuit, separate neutrals A

### Step 3. Usage

**1** inline jumper, frame to frame A

**2** inline jumper for use through a 24″ frame A

**3** inline jumper for use through a 30″ frame A

**4** vertical jumper, within frame, top to bottom A

**5** vertical jumper, adjacent frames, top to bottom A

### Prices for Steps 1-3.

| | | 1 | 2 | 3 | 4 | 5 |
|---|---|---|---|---|---|---|
| **FZ154.** | **08** | $119 | 135 | 145 | 119 | 129 |
| | **10** | $119 | 135 | 145 | 119 | 129 |

# Receptacle, 4-Circuit, 15 amp (package of 6) FZ152.

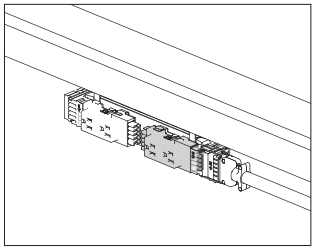

## Product Information

Description

This receptacle locks into the power harness of a frame. It is UL listed and Canadian UL listed. Package contains 6 receptacles.

Dimensions

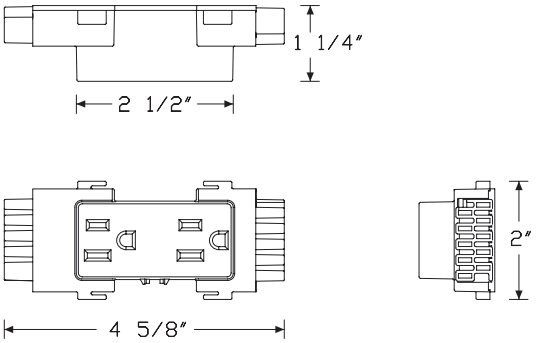


## Specification Information

Step 1.

**FZ152.** A

Step 2. Type

| | |
|---|---|
| **AN** | 8-wire duplex, shared neutral, circuit a A |
| **BN** | 8-wire duplex, shared neutral, circuit b A |
| **CN** | 8-wire duplex, shared neutral, circuit c A |
| **DN** | 8-wire duplex, shared neutral, circuit d A |
| **AG** | 8-wire duplex, shared neutral, circuit a, isolated ground A |
| **BG** | 8-wire duplex, shared neutral, circuit b, isolated ground A |
| **CG** | 8-wire duplex, shared neutral, circuit c, isolated ground A |
| **DG** | 8-wire duplex, shared neutral, circuit d, isolated ground A |
| **1N** | 10-wire duplex, separate neutrals, circuit 1 A |
| **2N** | 10-wire duplex, separate neutrals, circuit 2 A |
| **3N** | 10-wire duplex, separate neutrals, circuit 3 A |
| **4N** | 10-wire duplex, separate neutrals, circuit 4 A |
| **1G** | 10-wire duplex, separate neutrals, circuit 1, isolated ground A |
| **2G** | 10-wire duplex, separate neutrals, circuit 2, isolated ground A |
| **3G** | 10-wire duplex, separate neutrals, circuit 3, isolated ground A |
| **4G** | 10-wire duplex, separate neutrals, circuit 4, isolated ground A |

Prices for Steps 1-2.

| | | |
|---|---|---|
| **FZ152.** | **AN** | $188 |
| | **BN** | $188 |
| | **CN** | $188 |
| | **DN** | $188 |
| | **AG** | $188 |
| | **BG** | $188 |
| | **CG** | $188 |
| | **DG** | $188 |
| | **1N** | $188 |
| | **2N** | $188 |
| | **3N** | $188 |
| | **4N** | $188 |
| | **1G** | $188 |
| | **2G** | $188 |
| | **3G** | $188 |
| | **4G** | $188 |

# Receptacle, 4-Circuit, 15 amp (package of 6) *continued*



Step 3. Finish

| Sand Texture Paint | | |
|---|---|---|
| **8Q** | folkstone grey A | +$0 |
| **91** | white A | +$0 |
| **98** | studio white A | +$0 |
| **BK** | black A | +$0 |
| **CL** | cool grey neutral A | +$0 |
| **G1** | graphite A | +$0 |
| **WL** | sandstone A | +$0 |
| **WN** | warm grey neutral A | +$0 |

# Controlled Receptacle, 4-Circuit, 15 amp (package of 6) FZ152M

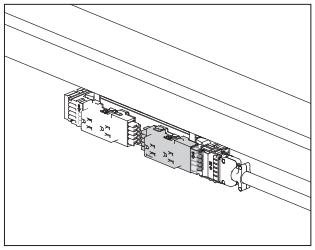

## Product Information

Description

This receptacle is to be used for ASHRAE90.1 and Title 24 compliance. A controlled receptacle should be used for any receptacles that are under automated control by the energy management system. The receptacle locks into the power harness of a frame. Package contains 6 receptacles. It is UL listed and Canadian UL listed.

Dimensions

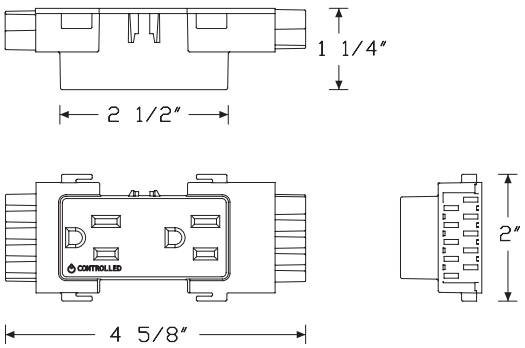


## Specification Information

Step 1.

**FZ152M.** A

Step 2. Type

| | |
|---|---|
| **AN** | 8-wire duplex, shared neutral, circuit a A |
| **BN** | 8-wire duplex, shared neutral, circuit b A |
| **CN** | 8-wire duplex, shared neutral, circuit c A |
| **DN** | 8-wire duplex, shared neutral, circuit d A |
| **AG** | 8-wire duplex, shared neutral, circuit a, isolated ground A |
| **BG** | 8-wire duplex, shared neutral, circuit b, isolated ground A |
| **CG** | 8-wire duplex, shared neutral, circuit c, isolated ground A |
| **DG** | 8-wire duplex, shared neutral, circuit d, isolated ground A |
| **1N** | 10-wire duplex, separate neutrals, circuit 1 A |
| **2N** | 10-wire duplex, separate neutrals, circuit 2 A |
| **3N** | 10-wire duplex, separate neutrals, circuit 3 A |
| **4N** | 10-wire duplex, separate neutrals, circuit 4 A |
| **1G** | 10-wire duplex, separate neutrals, circuit 1, isolated ground A |
| **2G** | 10-wire duplex, separate neutrals, circuit 2, isolated ground A |
| **3G** | 10-wire duplex, separate neutrals, circuit 3, isolated ground A |
| **4G** | 10-wire duplex, separate neutrals, circuit 4, isolated ground A |

Prices for Steps 1-2.

| | | |
|---|---|---|
| **FZ152M.** | **AN** | $188 |
| | **BN** | $188 |
| | **CN** | $188 |
| | **DN** | $188 |
| | **AG** | $188 |
| | **BG** | $188 |
| | **CG** | $188 |
| | **DG** | $188 |
| | **1N** | $188 |
| | **2N** | $188 |
| | **3N** | $188 |
| | **4N** | $188 |
| | **1G** | $188 |
| | **2G** | $188 |
| | **3G** | $188 |
| | **4G** | $188 |

# Controlled Receptacle, 4-Circuit, 15 amp (package of 6) *continued*



| Step 3. Finish | | |
|---|---|---|
| **BK** | black A | +$0 |
| **8Q** | folkstone grey A | +$0 |
| **91** | white A | +$0 |
| **98** | studio white A | +$0 |
| **CL** | cool grey neutral A | +$0 |
| **G1** | graphite A | +$0 |
| **WL** | sandstone A | +$0 |
| **WN** | warm grey neutral A | +$0 |

# Receptacle, 4-Circuit, 20 amp FZ153.

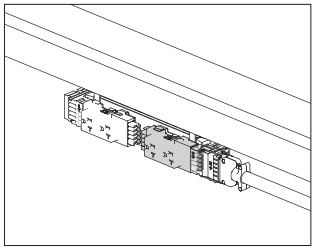

## Product Information

### Description

This receptacle snaps into an 8-wire, 4-circuit, shared neutral power harness or a 10-wire, 4-circuit, separate neutral power harness to provide power to equipment with a 20-amp standard plug head or cap. It also accepts 15-amp standard plug heads or caps. Package contains 1 receptacle. Receptacle is UL listed.

### Notes

Avoid overloading circuit by ensuring total connected load does not exceed 16 amps. If 1 piece of equipment requires all available power, do not use receptacle's second outlet or install additional receptacles on that circuit. In many cases, equipment requiring this receptacle will use all available power.

### Dimensions

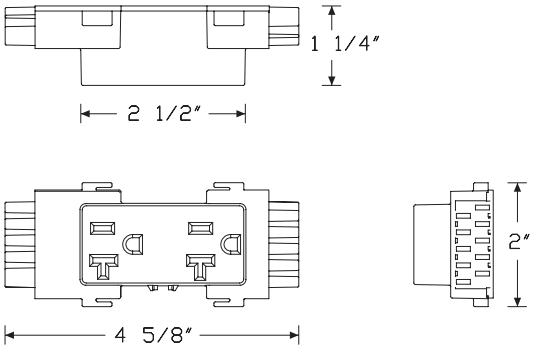


## Specification Information

### Step 1.

**FZ153.** A

### Step 2. Type

| | |
|---|---|
| **AN** | 8-wire duplex, shared neutral, circuit a A |
| **BN** | 8-wire duplex, shared neutral, circuit b A |
| **AG** | 8-wire duplex, shared neutral, circuit a, isolated ground A |
| **BG** | 8-wire duplex, shared neutral, circuit b, isolated ground A |
| **1N** | 10-wire duplex, separate neutrals, circuit 1 A |
| **2N** | 10-wire duplex, separate neutrals, circuit 2 A |
| **1G** | 10-wire duplex, separate neutrals, circuit 1, isolated ground A |
| **2G** | 10-wire duplex, separate neutrals, circuit 2, isolated ground A |

### Prices for Steps 1-2.

| | | |
|---|---|---|
| **FZ153.** | **AN** | $49 |
| | **BN** | $49 |
| | **AG** | $49 |
| | **BG** | $49 |
| | **1N** | $49 |
| | **2N** | $49 |
| | **1G** | $49 |
| | **2G** | $49 |

### Step 3. Finish

Sand Texture Paint

| | | |
|---|---|---|
| **8Q** | folkstone grey A | +$0 |
| **91** | white A | +$0 |
| **98** | studio white A | +$0 |
| **BK** | black A | +$0 |
| **CL** | cool grey neutral A | +$0 |
| **G1** | graphite A | +$0 |
| **WL** | sandstone A | +$0 |
| **WN** | warm grey neutral A | +$0 |

# Controlled Receptacle, 4-Circuit, 20 amp FZ153M

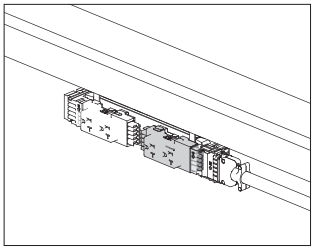

## Product Information

### Description

This receptacle is to be used for ASHRAE90.1 and Title 24 compliance. A controlled receptacle should be used for any receptacles that are under automated control by the energy management system. This receptacle snaps into an 8-wire, 4-circuit, shared neutral power harness or a 10-wire, 4-circuit, separate neutral power harness to provide power to equipment with a 20-amp standard plug head or cap. It also accepts 15-amp standard plug heads or caps. Package contains 1 receptacle. Receptacle is UL listed.

### Notes

Avoid overloading circuit by ensuring total connected load does not exceed 16 amps. If 1 piece of equipment requires all available power, do not use receptacle's second outlet or install additional receptacles on that circuit. In many cases, equipment requiring this receptacle will use all available power.

### Dimensions

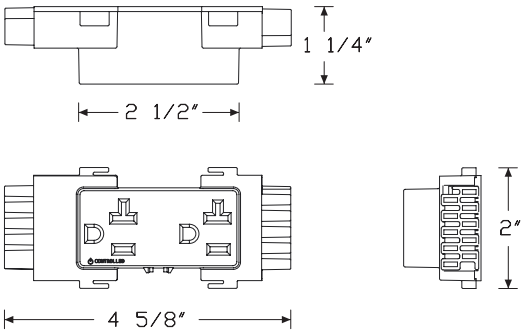


## Specification Information

### Step 1.

**FZ153M.** A

### Step 2. Type

| | |
|---|---|
| **AN** | 8-wire duplex, shared neutral, circuit a A |
| **BN** | 8-wire duplex, shared neutral, circuit b A |
| **AG** | 8-wire duplex, shared neutral, circuit a, isolated ground A |
| **BG** | 8-wire duplex, shared neutral, circuit b, isolated ground A |
| **1N** | 10-wire duplex, separate neutrals, circuit 1 A |
| **2N** | 10-wire duplex, separate neutrals, circuit 2 A |
| **1G** | 10-wire duplex, separate neutrals, circuit 1, isolated ground A |
| **2G** | 10-wire duplex, separate neutrals, circuit 2, isolated ground A |

### Prices for Steps 1-2.

| | | |
|---|---|---|
| **FZ153M.** | **AN** | $49 |
| | **BN** | $49 |
| | **AG** | $49 |
| | **BG** | $49 |
| | **1N** | $49 |
| | **2N** | $49 |
| | **1G** | $49 |
| | **2G** | $49 |

### Step 3. Finish

Sand Texture Paint

| | | |
|---|---|---|
| **8Q** | folkstone grey A | +$0 |
| **91** | white A | +$0 |
| **98** | studio white A | +$0 |
| **BK** | black A | +$0 |
| **CL** | cool grey neutral A | +$0 |
| **G1** | graphite A | +$0 |
| **WL** | sandstone A | +$0 |
| **WN** | warm grey neutral A | +$0 |

# Dual USB Charging Module, 2 Amp

FW15U.

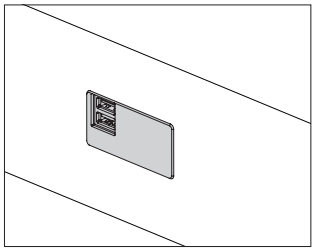

## Product Information

Description

This dual USB charging module locks into the power harness of the Canvas beam. Total output for both USB ports combined is 10 watts. The charging module is powered by circuit a for the 8-wire, and circuit 1 for the 10-wire.

Notes

The USB outlets can charge 2 devices at one time, rated 2 amps (10 watts) or less. It can charge 1 tablet and 1 phone, or 2 phones, at once. Maximum rating for both ports combined is 10 watts.

Dimensions

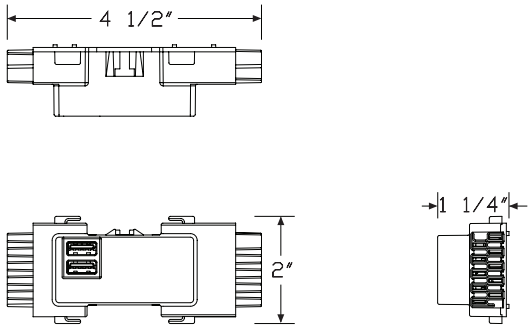


## Specification Information

Step 1.

**FW15U.** A

Step 2. Configuration

| | | |
|---|---|---|
| **08** | 8-wire, 4-circuit, shared neutral A | |
| **10** | 10-wire, 4-circuit, separate neutrals A | |

Prices for Steps 1-2.

| | | |
|---|---|---|
| **FW15U.08** | | $141 |
| | **10** | $141 |

Step 3. Finish

Sand Texture Paint

| | | |
|---|---|---|
| **8Q** | folkstone grey A | +$0 |
| **91** | white A | +$0 |
| **98** | studio white A | +$0 |
| **BK** | black A | +$0 |
| **CL** | cool grey neutral A | +$0 |
| **G1** | graphite A | +$0 |
| **WL** | sandstone A | +$0 |
| **WN** | warm grey neutral A | +$0 |

# Pari Screen, Frame Top FZ115.

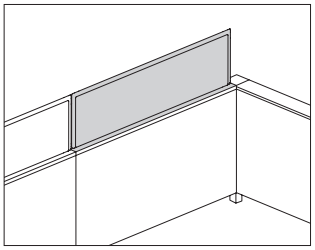

## Product Information

### Description

This tackable screen attaches to the top of a 22″-high or 29″-high Channel frame to extend the overall height and provide boundary. Bayonets extend through the top cap for attachment, allowing the screen to sit cleanly on the top cap. Frame top cap and attachment hardware included.

### Notes

Specify width of screen to match the width of frame.

Screen comes with metal alignment piece that attaches into the top of 2 screens to align them along a run.

Screen accepts Customer's Own Material (COM). Yardage is estimated for directional, 54″-wide fabrics.

For vertical fabric direction (T) with 22″-high frame (22):

Height—Yardage

20″—1.58

24″—1.83

31″—2.27

35″—2.58

For vertical fabric direction (T) with 29″-high frame (29):

Height—Yardage

13″—1.17

17″—1.42

24″—1.83

28″—2.14

For horizontal fabric direction (R):

Width—Yardage

24″—1.89

30″—2.27

36″—2.65

42″—3.02

48″—3.40

54″—3.78

60″—4.16

66″—4.54

72″—4.91

For information on multiple quantities or directional fabrics, contact COM Department. See Order Information in appendices.

### Dimensions

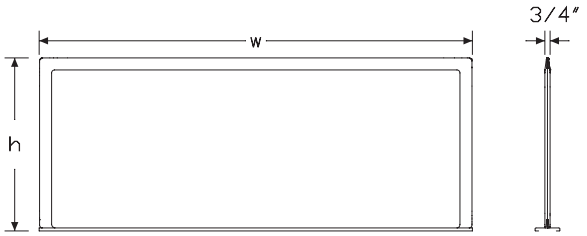

**Specification Information**

Step 1.

**FZ115.**

Step 2. Type

**F** fabric

Step 3. Frame Height

**22** use with 22"-high frames

**29** use with 29"-high frames

Step 4. Screen Height

*For use with 22"-high frames (22)*

**20** 20" high

**24** 24" high

**31** 31" high

**35** 35" high

*For use with 29"-high frames (29)*

**13** 13" high

**17** 17" high

**24** 24" high

**28** 28" high

Step 5. Width

**24** 24" wide

**30** 30" wide

**36** 36" wide

**42** 42" wide

**48** 48" wide

**54** 54" wide

**60** 60" wide

**66** 66" wide

**72** 72" wide

Step 6. Surface Material

*For 24" wide (24), 30" wide (30), 36" wide (36), 42" wide (42), or 48" wide (48)*

**T** tackable fabric

**R** tackable fabric, horizontal

*For 54" wide (54), 60" wide (60), 66" wide (66), or 72" wide (72)*

**R** tackable fabric, horizontal

Step 7. Top Cap Material

**A** painted architectural top cap

**P** painted standard top cap

Prices for Steps 1-7.

| | | 1324TA | 1324TP | 1324RA | 1324RP | 1330TA | 1330TP |
|---|---|---|---|---|---|---|---|
| **FZ115. F** | **29** | $757 | 723 | 757 | 723 | 803 | 760 |

| | | 1330RA | 1330RP | 1336TA | 1336TP | 1336RA | 1336RP |
|---|---|---|---|---|---|---|---|
| **FZ115. F** | **29** | $803 | 760 | 857 | 810 | 857 | 810 |

| | | 1342TA | 1342TP | 1342RA | 1342RP | 1348TA | 1348TP |
|---|---|---|---|---|---|---|---|
| **FZ115. F** | **29** | $908 | 853 | 908 | 853 | 949 | 881 |

| | | 1348RA | 1348RP | 1354RA | 1354RP | 1360RA | 1360RP |
|---|---|---|---|---|---|---|---|
| **FZ115. F** | **29** | $949 | 881 | 983 | 915 | 1039 | 968 |

| | | 1366RA | 1366RP | 1372RA | 1372RP | 2024TA | 2024TP |
|---|---|---|---|---|---|---|---|
| **FZ115. F** | **22** | — | — | — | — | $835 | 797 |
| | **29** | $1093 | 1016 | 1154 | 1073 | — | — |

| | | 2024RA | 2024RP | 2030TA | 2030TP | 2030RA | 2030RP |
|---|---|---|---|---|---|---|---|
| **FZ115. F** | **22** | $835 | 797 | 885 | 838 | 885 | 838 |

| | | 2036TA | 2036TP | 2036RA | 2036RP | 2042TA | 2042TP |
|---|---|---|---|---|---|---|---|
| **FZ115. F** | **22** | $946 | 893 | 946 | 893 | 1001 | 940 |

| | | 2042RA | 2042RP | 2048TA | 2048TP | 2048RA | 2048RP |
|---|---|---|---|---|---|---|---|
| **FZ115. F** | **22** | $1001 | 940 | 1045 | 971 | 1045 | 971 |

| | | 2054RA | 2054RP | 2060RA | 2060RP | 2066RA | 2066RP |
|---|---|---|---|---|---|---|---|
| **FZ115. F** | **22** | $1147 | 1067 | 1211 | 1129 | 1276 | 1186 |

| | | 2072RA | 2072RP | 1724TA | 1724TP | 1724RA | 1724RP |
|---|---|---|---|---|---|---|---|
| **FZ115. F** | **22** | $1346 | 1253 | — | — | — | — |
| | **29** | — | — | $796 | 758 | 796 | 758 |

| | | 1730TA | 1730TP | 1730RA | 1730RP | 1736TA | 1736TP |
|---|---|---|---|---|---|---|---|
| **FZ115. F** | **29** | $843 | 799 | 843 | 799 | 901 | 850 |

| | | 1736RA | 1736RP | 1742TA | 1742TP | 1742RA | 1742RP |
|---|---|---|---|---|---|---|---|
| **FZ115. F** | **29** | $901 | 850 | 954 | 896 | 954 | 896 |

| | | 1748TA | 1748TP | 1748RA | 1748RP | 1754RA | 1754RP |
|---|---|---|---|---|---|---|---|
| **FZ115. F** | **29** | $995 | 925 | 995 | 925 | 1062 | 988 |

| | | 1760RA | 1760RP | 1766RA | 1766RP | 1772RA | 1772RP |
|---|---|---|---|---|---|---|---|
| **FZ115. F** | **29** | $1122 | 1046 | 1181 | 1098 | 1246 | 1159 |

| | | 2424TA | 2424TP | 2424RA | 2424RP | 2430TA | 2430TP |
|---|---|---|---|---|---|---|---|
| **FZ115. F** | **22** | $877 | 836 | 877 | 836 | 929 | 881 |
| | **29** | $877 | 836 | 877 | 836 | 929 | 881 |

| | | 2430RA | 2430RP | 2436TA | 2436TP | 2436RA | 2436RP |
|---|---|---|---|---|---|---|---|
| **FZ115. F** | **22** | $929 | 881 | 993 | 937 | 993 | 937 |
| | **29** | $929 | 881 | 993 | 937 | 993 | 937 |

| | | 2442TA | 2442TP | 2442RA | 2442RP | 2448TA | 2448TP |
|---|---|---|---|---|---|---|---|
| **FZ115. F** | **22** | $1051 | 987 | 1051 | 987 | 1098 | 1019 |
| | **29** | $1051 | 987 | 1051 | 987 | 1098 | 1019 |

| | | 2448RA | 2448RP | 2454RA | 2454RP | 2460RA | 2460RP |
|---|---|---|---|---|---|---|---|
| **FZ115. F** | **22** | $1098 | 1019 | 1204 | 1121 | 1272 | 1186 |
| | **29** | $1098 | 1019 | 1204 | 1121 | 1272 | 1186 |

| | | 2466RA | 2466RP | 2472RA | 2472RP | 3124TA | 3124TP |
|---|---|---|---|---|---|---|---|
| **FZ115. F** | **22** | $1340 | 1244 | 1413 | 1314 | 967 | 922 |
| | **29** | $1340 | 1244 | 1413 | 1314 | — | — |

| | | 3124RA | 3124RP | 3130TA | 3130TP | 3130RA | 3130RP |
|---|---|---|---|---|---|---|---|
| **FZ115. F** | **22** | $967 | 922 | 1025 | 971 | 1025 | 971 |

| | | 3136TA | 3136TP | 3136RA | 3136RP | 3142TA | 3142TP |
|---|---|---|---|---|---|---|---|
| **FZ115. F** | **22** | $1094 | 1034 | 1094 | 1034 | 1158 | 1088 |

| | | 3142RA | 3142RP | 3148TA | 3148TP | 3148RA | 3148RP |
|---|---|---|---|---|---|---|---|
| **FZ115. F** | **22** | $1158 | 1088 | 1210 | 1124 | 1210 | 1124 |

| | | 3154RA | 3154RP | 3160RA | 3160RP | 3166RA | 3166RP |
|---|---|---|---|---|---|---|---|
| **FZ115. F** | **22** | $1328 | 1235 | 1403 | 1307 | 1477 | 1372 |

| | | 3172RA | 3172RP | 2824TA | 2824TP | 2824RA | 2824RP |
|---|---|---|---|---|---|---|---|
| **FZ115. F** | **22** | $1558 | 1449 | — | — | — | — |
| | **29** | — | — | $921 | 878 | 921 | 878 |

| | | 2830TA | 2830TP | 2830RA | 2830RP | 2836TA | 2836TP |
|---|---|---|---|---|---|---|---|
| **FZ115. F** | **29** | $976 | 924 | 976 | 924 | 1043 | 984 |

| | | 2836RA | 2836RP | 2842TA | 2842TP | 2842RA | 2842RP |
|---|---|---|---|---|---|---|---|
| **FZ115. F** | **29** | $1043 | 984 | 1104 | 1037 | 1104 | 1037 |

| | | 2848TA | 2848TP | 2848RA | 2848RP | 2854RA | 2854RP |
|---|---|---|---|---|---|---|---|
| **FZ115. F** | **29** | $1152 | 1071 | 1152 | 1071 | 1265 | 1177 |

| | | 2860RA | 2860RP | 2866RA | 2866RP | 2872RA | 2872RP |
|---|---|---|---|---|---|---|---|
| **FZ115. F** | **29** | $1336 | 1245 | 1407 | 1307 | 1484 | 1380 |

| | | 3524TA | 3524TP | 3524RA | 3524RP | 3530TA | 3530TP |
|---|---|---|---|---|---|---|---|
| **FZ115. F** | **22** | $1015 | 968 | 1015 | 968 | 1075 | 1019 |

| | | 3530RA | 3530RP | 3536TA | 3536TP | 3536RA | 3536RP |
|---|---|---|---|---|---|---|---|
| **FZ115. F** | **22** | $1075 | 1019 | 1149 | 1085 | 1149 | 1085 |

| | | 3542TA | 3542TP | 3542RA | 3542RP | 3548TA | 3548TP |
|---|---|---|---|---|---|---|---|
| **FZ115. F** | **22** | $1217 | 1143 | 1217 | 1143 | 1271 | 1181 |

| | | 3548RA | 3548RP | 3554RA | 3554RP | 3560RA | 3560RP |
|---|---|---|---|---|---|---|---|
| **FZ115. F** | **22** | $1271 | 1181 | 1394 | 1297 | 1472 | 1372 |

| | | 3566RA | 3566RP | 3572RA | 3572RP |
|---|---|---|---|---|---|
| **FZ115. F** | **22** | $1551 | 1441 | 1636 | 1522 |

## Step 8. Top Cap Finish

| Sand Texture Paint | | |
|---|---|---|
| **8Q** | folkstone grey | +$0 |
| **91** | white | +$0 |
| **98** | studio white | +$0 |
| **BK** | black | +$0 |
| **CL** | cool grey neutral | +$0 |
| **G1** | graphite | +$0 |
| **WL** | sandstone | +$0 |
| **WN** | warm grey neutral | +$0 |

| Metallic Paint | | |
|---|---|---|
| **CN** | metallic champagne | +$0 |
| **EH** | metallic bronze | +$0 |
| **MS** | metallic silver | +$0 |

## Step 9. Fabric

| *For 24" wide (24) or 30" wide (30)* | |
|---|---|
| Price Category C | +$207 |
| Price Category 1 | +$0 |
| Price Category 2 | +$15 |
| Price Category 3 | +$35 |
| Price Category 4 | +$61 |
| Price Category E | +$124 |

| *For 36" wide (36)* | |
|---|---|
| Price Category 1 | +$0 |
| Price Category 2 | +$23 |
| Price Category 3 | +$54 |
| Price Category 4 | +$94 |
| Price Category E | +$172 |

| *For 42" wide (42)* | |
|---|---|
| Price Category C | +$310 |
| Price Category 1 | +$0 |
| Price Category 2 | +$23 |
| Price Category 3 | +$54 |
| Price Category 4 | +$94 |
| Price Category E | +$172 |

| *For 48" wide (48)* | |
|---|---|
| Price Category C | +$310 |
| Price Category 1 | +$0 |
| Price Category 2 | +$23 |
| Price Category 3 | +$54 |
| Price Category 4 | +$94 |
| Price Category E | +$172 |

| *For 54" wide (54)* | |
|---|---|
| Price Category C | +$413 |
| Price Category 1 | +$0 |
| Price Category 2 | +$27 |
| Price Category 3 | +$65 |
| Price Category 4 | +$113 |
| Price Category E | +$172 |

| *For 60" wide (60)* | |
|---|---|
| Price Category C | +$413 |
| Price Category 1 | +$0 |
| Price Category 2 | +$27 |
| Price Category 3 | +$65 |
| Price Category 4 | +$113 |
| Price Category E | +$172 |

| *For 66" wide (66)* | |
|---|---|
| Price Category C | +$491 |
| Price Category 1 | +$0 |
| Price Category 2 | +$33 |
| Price Category 3 | +$78 |
| Price Category 4 | +$135 |
| Price Category E | +$197 |

| *For 72" wide (72)* | |
|---|---|
| Price Category C | +$491 |
| Price Category 1 | +$0 |
| Price Category 2 | +$33 |
| Price Category 3 | +$78 |
| Price Category 4 | +$135 |
| Price Category E | +$197 |

# Flat Edge Screen, Frame Top FZ116.

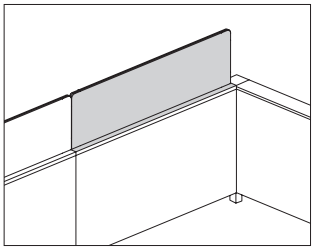

## Product Information

### Description

This tackable screen attaches to the top of a 22″-high or 29″-high Channel frame to extend the overall height and provide boundary. Bayonets extend through the top cap for attachment, allowing the screen to sit cleanly on the top cap. Frame top cap and attachment hardware included.

### Notes

Specify width of screen to match the width of frame.

Screen accepts Customer's Own Material (COM). Yardage is estimated for directional, 54″-wide fabrics.

For vertical fabric direction (T) with 22″-high frame (22):

Height—Yardage

20″—1.58

24″—1.83

31″—2.27

35″—2.58

For vertical fabric direction (T) with 29″-high frame (29):

Height—Yardage

13″—1.17

17″—1.42

24″—1.83

28″—2.14

For horizontal fabric direction (R):

Width—Yardage

24″—1.89

30″—2.27

36″—2.65

42″—3.02

48″—3.40

54″—3.78

60″—4.16

66″—4.54

72″—4.91

For information on multiple quantities or directional fabrics, contact COM Department. See Order Information in appendices.

### Dimensions

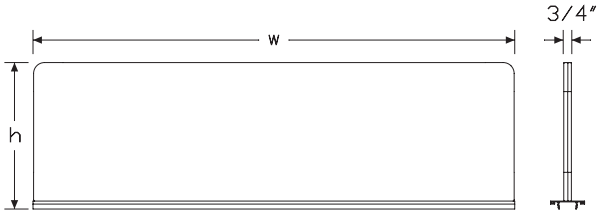

# Flat Edge Screen, Frame Top

*continued*

**Specification Information**

Step 1.

**FZ116.** A

Step 2. Type

**F** fabric A

Step 3. Frame Height

**22** 22" high A
**29** 29" high A

Step 4. Screen Height

*For 22" high (22)*

**20** 20" high A
**24** 24" high A
**31** 31" high A
**35** 35" high A

*For 29" high (29)*

**13** 13" high A
**17** 17" high A
**24** 24" high A
**28** 28" high A

Step 5. Width

**24** 24" wide A
**30** 30" wide A
**36** 36" wide A
**42** 42" wide A
**48** 48" wide A
**54** 54" wide A
**60** 60" wide A
**66** 66" wide A
**72** 72" wide A

Step 6. Surface Material

*For 24" wide (24), 30" wide (30), 36" wide (36), 42" wide (42), or 48" wide (48)*

**T** tackable fabric A
**R** tackable fabric, horizontal A

*For 54" wide (54), 60" wide (60), 66" wide (66), or 72" wide (72)*

**R** tackable fabric, horizontal A

Step 7. Top Cap Material

**A** painted architectural top cap A
**P** painted standard top cap A

Prices for Steps 1-7.

| | | 1324TA | 1324TP | 1324RA | 1324RP | 1330TA | 1330TP |
|---|---|---|---|---|---|---|---|
| **FZ116. F** | **29** | $606 | 578 | 606 | 578 | 642 | 608 |

| | | 1330RA | 1330RP | 1336TA | 1336TP | 1336RA | 1336RP |
|---|---|---|---|---|---|---|---|
| **FZ116. F** | **29** | $642 | 608 | 686 | 648 | 686 | 648 |

| | | 1342TA | 1342TP | 1342RA | 1342RP | 1348TA | 1348TP |
|---|---|---|---|---|---|---|---|
| **FZ116. F** | **29** | $727 | 682 | 727 | 682 | 758 | 704 |

| | | 1348RA | 1348RP | 1354RA | 1354RP | 1360RA | 1360RP |
|---|---|---|---|---|---|---|---|
| **FZ116. F** | **29** | $758 | 704 | 786 | 732 | 831 | 774 |

| | | 1366RA | 1366RP | 1372RA | 1372RP | 2024TA | 2024TP |
|---|---|---|---|---|---|---|---|
| **FZ116. F** | **22** | — | — | — | — | $668 | 637 |
| | **29** | $875 | 813 | 923 | 858 | — | — |

| | | 2024RA | 2024RP | 2030TA | 2030TP | 2030RA | 2030RP |
|---|---|---|---|---|---|---|---|
| **FZ116. F** | **22** | $668 | 637 | 708 | 671 | 708 | 671 |

| | | 2036TA | 2036TP | 2036RA | 2036RP | 2042TA | 2042TP |
|---|---|---|---|---|---|---|---|
| **FZ116. F** | **22** | $757 | 714 | 757 | 714 | 801 | 752 |

| | | 2042RA | 2042RP | 2048TA | 2048TP | 2048RA | 2048RP |
|---|---|---|---|---|---|---|---|
| **FZ116. F** | **22** | $801 | 752 | 836 | 777 | 836 | 777 |

| | | 2054RA | 2054RP | 2060RA | 2060RP | 2066RA | 2066RP |
|---|---|---|---|---|---|---|---|
| **FZ116. F** | **22** | $917 | 853 | 969 | 903 | 1020 | 949 |

| | | 2072RA | 2072RP | 1724TA | 1724TP | 1724RA | 1724RP |
|---|---|---|---|---|---|---|---|
| **FZ116. F** | **22** | $1076 | 1001 | — | — | — | — |
| | **29** | — | — | $636 | 607 | 636 | 607 |

| | | 1730TA | 1730TP | 1730RA | 1730RP | 1736TA | 1736TP |
|---|---|---|---|---|---|---|---|
| **FZ116. F** | **29** | $674 | 638 | 674 | 638 | 721 | 680 |

| | | 1736RA | 1736RP | 1742TA | 1742TP | 1742RA | 1742RP |
|---|---|---|---|---|---|---|---|
| **FZ116. F** | **29** | $721 | 680 | 763 | 716 | 763 | 716 |

| | | 1748TA | 1748TP | 1748RA | 1748RP | 1754RA | 1754RP |
|---|---|---|---|---|---|---|---|
| **FZ116. F** | **29** | $797 | 740 | 797 | 740 | 849 | 790 |

| | | 1760RA | 1760RP | 1766RA | 1766RP | 1772RA | 1772RP |
|---|---|---|---|---|---|---|---|
| **FZ116. F** | **29** | $897 | 836 | 944 | 878 | 997 | 927 |

| | | 2424TA | 2424TP | 2424RA | 2424RP | 2430TA | 2430TP |
|---|---|---|---|---|---|---|---|
| **FZ116. F** | **22** | $701 | 669 | 701 | 669 | 743 | 704 |
| | **29** | $701 | 669 | 701 | 669 | 743 | 704 |

| | | 2430RA | 2430RP | 2436TA | 2436TP | 2436RA | 2436RP |
|---|---|---|---|---|---|---|---|
| **FZ116. F** | **22** | $743 | 704 | 795 | 750 | 795 | 750 |
| | **29** | $743 | 704 | 795 | 750 | 795 | 750 |

| | | 2442TA | 2442TP | 2442RA | 2442RP | 2448TA | 2448TP |
|---|---|---|---|---|---|---|---|
| **FZ116. F** | **22** | $841 | 789 | 841 | 789 | 878 | 816 |
| | **29** | $841 | 789 | 841 | 789 | 878 | 816 |

| | | 2448RA | 2448RP | 2454RA | 2454RP | 2460RA | 2460RP |
|---|---|---|---|---|---|---|---|
| **FZ116. F** | **22** | $878 | 816 | 964 | 897 | 1017 | 949 |
| | **29** | $878 | 816 | 964 | 897 | 1017 | 949 |

| | | 2466RA | 2466RP | 2472RA | 2472RP | 3124TA | 3124TP |
|---|---|---|---|---|---|---|---|
| **FZ116. F** | **22** | $1071 | 996 | 1130 | 1052 | 850 | 812 |
| | **29** | $1071 | 996 | 1130 | 1052 | — | — |

| | | 3124RA | 3124RP | 3130TA | 3130TP | 3130RA | 3130RP |
|---|---|---|---|---|---|---|---|
| **FZ116. F** | **22** | $850 | 812 | 902 | 854 | 902 | 854 |

| | | 3136TA | 3136TP | 3136RA | 3136RP | 3142TA | 3142TP |
|---|---|---|---|---|---|---|---|
| **FZ116. F** | **22** | $964 | 909 | 964 | 909 | 1019 | 958 |

| | | 3142RA | 3142RP | 3148TA | 3148TP | 3148RA | 3148RP |
|---|---|---|---|---|---|---|---|
| **FZ116. F** | **22** | $1019 | 958 | 1065 | 989 | 1065 | 989 |

| | | 3154RA | 3154RP | 3160RA | 3160RP | 3166RA | 3166RP |
|---|---|---|---|---|---|---|---|
| **FZ116. F** | **22** | $1168 | 1087 | 1234 | 1150 | 1299 | 1208 |

| | | 3172RA | 3172RP | 2824TA | 2824TP | 2824RA | 2824RP |
|---|---|---|---|---|---|---|---|
| **FZ116. F** | **22** | $1371 | 1276 | — | — | — | — |
| | **29** | — | — | $811 | 772 | 811 | 772 |

| | | 2830TA | 2830TP | 2830RA | 2830RP | 2836TA | 2836TP |
|---|---|---|---|---|---|---|---|
| **FZ116. F** | **29** | $858 | 814 | 858 | 814 | 917 | 866 |

| | | 2836RA | 2836RP | 2842TA | 2842TP | 2842RA | 2842RP |
|---|---|---|---|---|---|---|---|
| **FZ116. F** | **29** | $917 | 866 | 971 | 912 | 971 | 912 |

| | | 2848TA | 2848TP | 2848RA | 2848RP | 2854RA | 2854RP |
|---|---|---|---|---|---|---|---|
| **FZ116. F** | **29** | $1014 | 942 | 1014 | 942 | 1113 | 1036 |

| | | 2860RA | 2860RP | 2866RA | 2866RP | 2872RA | 2872RP |
|---|---|---|---|---|---|---|---|
| **FZ116. F** | **29** | $1176 | 1095 | 1237 | 1150 | 1305 | 1215 |

| | | 3524TA | 3524TP | 3524RA | 3524RP | 3530TA | 3530TP |
|---|---|---|---|---|---|---|---|
| **FZ116. F** | **22** | $893 | 852 | 893 | 852 | 947 | 897 |

| | | 3530RA | 3530RP | 3536TA | 3536TP | 3536RA | 3536RP |
|---|---|---|---|---|---|---|---|
| **FZ116. F** | **22** | $947 | 897 | 1011 | 955 | 1011 | 955 |

| | | 3542TA | 3542TP | 3542RA | 3542RP | 3548TA | 3548TP |
|---|---|---|---|---|---|---|---|
| **FZ116. F** | **22** | $1071 | 1005 | 1071 | 1005 | 1118 | 1039 |

| | | 3548RA | 3548RP | 3554RA | 3554RP | 3560RA | 3560RP |
|---|---|---|---|---|---|---|---|
| **FZ116. F** | **22** | $1118 | 1039 | 1226 | 1141 | 1295 | 1208 |

| | | 3566RA | 3566RP | 3572RA | 3572RP |
|---|---|---|---|---|---|
| **FZ116. F** | **22** | $1364 | 1268 | 1439 | 1340 |

## Step 8. Top Cap Finish

### Metallic Paint

| | | |
|---|---|---|
| **CN** | metallic champagne A | +$0 |
| **EH** | metallic bronze A | +$0 |
| **MS** | metallic silver A | +$0 |

### Sand Texture Paint

| | | |
|---|---|---|
| **8Q** | folkstone grey A | +$0 |
| **91** | white A | +$0 |
| **98** | studio white A | +$0 |
| **BK** | black A | +$0 |
| **CL** | cool grey neutral A | +$0 |
| **G1** | graphite A | +$0 |
| **WL** | sandstone A | +$0 |
| **WN** | warm grey neutral A | +$0 |

## Step 9. Fabric

| | **24** | **30** | **36** | **42** | **48** |
|---|---|---|---|---|---|
| Price Category C | +$207 | 207 | 310 | 310 | 413 |
| Price Category 1 | +$0 | 0 | 0 | 0 | 0 |
| Price Category 2 | +$15 | 15 | 23 | 23 | 23 |
| Price Category 3 | +$35 | 35 | 54 | 54 | 54 |
| Price Category 4 | +$61 | 61 | 94 | 94 | 94 |
| Price Category E | +$124 | 124 | 172 | 172 | 172 |

# Flat Edge Screen, Frame Top

*continued*

| | 54 | 60 | 66 | 72 |
|---|---|---|---|---|
| Price Category C | +$491 | 491 | 0 | 0 |
| Price Category 1 | +$0 | 0 | 0 | 0 |
| Price Category 2 | +$27 | 27 | 33 | 33 |
| Price Category 3 | +$65 | 65 | 78 | 78 |
| Price Category 4 | +$113 | 113 | 135 | 135 |
| Price Category E | +$172 | 172 | 197 | 197 |

# Glass Screen, Frame Top FZ114.

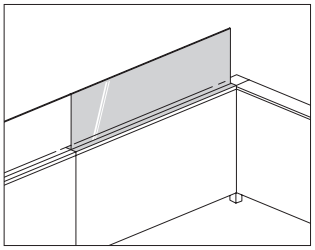

## Product Information

### Description

This glass screen attaches to the top of a frame to increase the overall height. It has concealed attachment brackets that eliminate the gap between the top of the frame and bottom of the screen. Frame top cap and attachment hardware included.

### Notes

Specify width of screen to match the width of 1 frame, or the combined width of 2 frames.

18"- to 48"-wide frame top screens can only span 1 frame. 54"-wide and wider screens can span 2 frames.

### Dimensions

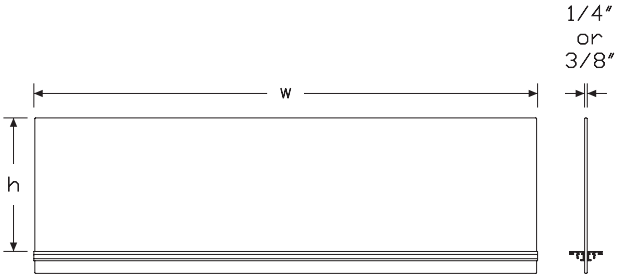


## Specification Information

### Step 1.

**FZ114.**

### Step 2. Frame Height

| | |
|---|---|
| **22** | use with 22"-high frames |
| **29** | use with 29"-high frames |

### Step 3. Screen Height

*For use with 22"-high frames (22)*

| | |
|---|---|
| **20** | 20" high |
| **24** | 24" high |

*For use with 29"-high frames (29)*

| | |
|---|---|
| **13** | 13" high |
| **17** | 17" high |

### Step 4. Width

| | |
|---|---|
| **24** | 24" wide |
| **30** | 30" wide |
| **36** | 36" wide |
| **42** | 42" wide |
| **48** | 48" wide |
| **54** | 54" wide |
| **60** | 60" wide |
| **66** | 66" wide |
| **72** | 72" wide |
| **78** | 78" wide |
| **84** | 84" wide |
| **96** | 96" wide |

### Step 5. Top Cap Material

| | |
|---|---|
| **A** | painted architectural top cap |
| **P** | painted standard top cap |

### Step 6. Surface Finish

*For 24" wide (24), 30" wide (30), 36" wide (36), 42" wide (42), 48" wide (48), 54" wide (54), or 60" wide (60) with painted architectural top cap (A)*

| | |
|---|---|
| **TR** | clear glass - 1/4" thick A |
| **5A** | opal etched - 1/4" thick A |
| **NN** | no glass- for customer's own glass A |
| **C3** | clear glass - 3/8" thick A |
| **G3** | opal glass - 3/8" thick A |
| **N3** | no glass, for customer's own 3/8" thick glass A |

*For 24" wide (24), 30" wide (30), 36" wide (36), 42" wide (42), 48" wide (48), 54" wide (54), 60" wide (60), 66" wide (66), 72" wide (72), 78" wide (78), 84" wide (84), or 96" wide (96) with painted standard top cap (P)*

**TR** clear glass - 1/4" thick
**5A** opal etched - 1/4" thick
**NN** no glass- for customer's own glass

*For 66" wide (66), 72" wide (72), 78" wide (78), 84" wide (84), or 96" wide (96) with painted architectural top cap (A)*

**TR** clear glass - 1/4" thick [A]
**5A** opal etched - 1/4" thick [A]
**NN** no glass- for customer's own glass [A]
**N3** no glass, for customer's own 3/8" thick glass [A]

Prices for Steps 1-6.

| | | 24ATR | 24A5A | 24ANN | 24AC3 | 24AG3 | 24AN3 |
|---|---|---|---|---|---|---|---|
| FZ114. 22 | 20 | $443 | 577 | 246 | 562 | 724 | 246 |
| | 24 | $473 | 629 | 246 | 603 | 789 | 246 |
| 29 | 13 | $382 | 471 | 246 | 481 | 592 | 246 |
| | 17 | $412 | 524 | 246 | 522 | 658 | 246 |

| | | 24PTR | 24P5A | 24PNN | 30ATR | 30A5A | 30ANN |
|---|---|---|---|---|---|---|---|
| FZ114. 22 | 20 | $389 | 519 | 192 | 472 | 626 | 276 |
| | 24 | $420 | 570 | 192 | 503 | 679 | 276 |
| 29 | 13 | $328 | 418 | 192 | 411 | 521 | 276 |
| | 17 | $359 | 468 | 192 | 442 | 574 | 276 |

| | | 30AC3 | 30AG3 | 30AN3 | 30PTR | 30P5A | 30PNN |
|---|---|---|---|---|---|---|---|
| FZ114. 22 | 20 | $599 | 788 | 276 | 411 | 562 | 214 |
| | 24 | $639 | 854 | 276 | 442 | 613 | 214 |
| 29 | 13 | $518 | 657 | 276 | 351 | 461 | 214 |
| | 17 | $558 | 723 | 276 | 381 | 512 | 214 |

| | | 36ATR | 36A5A | 36ANN | 36AC3 | 36AG3 | 36AN3 |
|---|---|---|---|---|---|---|---|
| FZ114. 22 | 20 | $506 | 696 | 304 | 639 | 869 | 304 |
| | 24 | $536 | 749 | 304 | 680 | 935 | 304 |
| 29 | 13 | $445 | 591 | 304 | 558 | 738 | 304 |
| | 17 | $475 | 644 | 304 | 599 | 804 | 304 |

| | | 36PTR | 36P5A | 36PNN | 42ATR | 42A5A | 42ANN |
|---|---|---|---|---|---|---|---|
| FZ114. 22 | 20 | $438 | 623 | 235 | 544 | 772 | 333 |
| | 24 | $468 | 674 | 235 | 575 | 825 | 333 |
| 29 | 13 | $377 | 522 | 235 | 483 | 667 | 333 |
| | 17 | $407 | 573 | 235 | 514 | 720 | 333 |

| | | 42AC3 | 42AG3 | 42AN3 | 42PTR | 42P5A | 42PNN |
|---|---|---|---|---|---|---|---|
| FZ114. 22 | 20 | $688 | 967 | 333 | 467 | 693 | 257 |
| | 24 | $729 | 1033 | 333 | 498 | 744 | 257 |
| 29 | 13 | $607 | 835 | 333 | 406 | 592 | 257 |
| | 17 | $648 | 901 | 333 | 437 | 642 | 257 |

| | | 48ATR | 48A5A | 48ANN | 48AC3 | 48AG3 | 48AN3 |
|---|---|---|---|---|---|---|---|
| FZ114. 22 | 20 | $584 | 868 | 373 | 737 | 1088 | 373 |
| | 24 | $614 | 921 | 373 | 777 | 1154 | 373 |
| 29 | 13 | $523 | 763 | 373 | 656 | 957 | 373 |
| | 17 | $553 | 816 | 373 | 696 | 1023 | 373 |

| | | 48PTR | 48P5A | 48PNN | 54ATR | 54A5A | 54ANN |
|---|---|---|---|---|---|---|---|
| FZ114. 22 | 20 | $498 | 779 | 288 | 614 | 914 | 402 |
| | 24 | $528 | 830 | 288 | 645 | 967 | 402 |
| 29 | 13 | $437 | 678 | 288 | 553 | 809 | 402 |
| | 17 | $467 | 729 | 288 | 584 | 861 | 402 |

| | | 54AC3 | 54AG3 | 54AN3 | 54PTR | 54P5A | 54PNN |
|---|---|---|---|---|---|---|---|
| FZ114. 22 | 20 | $777 | 1145 | 402 | 522 | 820 | 310 |
| | 24 | $818 | 1211 | 402 | 552 | 871 | 310 |
| 29 | 13 | $696 | 1013 | 402 | 461 | 719 | 310 |
| | 17 | $737 | 1079 | 402 | 491 | 769 | 310 |

| | | 60ATR | 60A5A | 60ANN | 60AC3 | 60AG3 | 60AN3 |
|---|---|---|---|---|---|---|---|
| FZ114. 22 | 20 | $645 | 960 | 432 | 818 | 1202 | 432 |
| | 24 | $675 | 1012 | 432 | 858 | 1268 | 432 |
| 29 | 13 | $584 | 854 | 432 | 737 | 1070 | 432 |
| | 17 | $614 | 907 | 432 | 777 | 1136 | 432 |

| | | 60PTR | 60P5A | 60PNN | 66ATR | 66A5A | 66ANN |
|---|---|---|---|---|---|---|---|
| FZ114. 22 | 20 | $546 | 860 | 332 | 675 | 1005 | 460 |
| | 24 | $577 | 911 | 332 | 705 | 1058 | 460 |
| 29 | 13 | $485 | 759 | 332 | 614 | 900 | 460 |
| | 17 | $516 | 810 | 332 | 645 | 953 | 460 |

| | | 66AN3 | 66PTR | 66P5A | 66PNN | 72ATR | 72A5A |
|---|---|---|---|---|---|---|---|
| FZ114. 22 | 20 | $460 | 571 | 901 | 349 | 705 | 1051 |
| | 24 | $460 | 601 | 952 | 349 | 736 | 1104 |
| 29 | 13 | $460 | 510 | 800 | 349 | 645 | 946 |
| | 17 | $460 | 540 | 850 | 349 | 675 | 998 |

| | | 72ANN | 72AN3 | 72PTR | 72P5A | 72PNN | 78ATR |
|---|---|---|---|---|---|---|---|
| FZ114. 22 | 20 | $489 | 489 | 595 | 941 | 359 | 736 |
| | 24 | $489 | 489 | 625 | 992 | 359 | 766 |
| 29 | 13 | $489 | 489 | 534 | 840 | 359 | 675 |
| | 17 | $489 | 489 | 564 | 891 | 359 | 705 |

| | | | 78A5A | 78ANN | 78AN3 | 78PTR | 78P5A | 78PNN |
|---|---|---|---|---|---|---|---|---|
| **FZ114.** | **22** | **20** | $1096 | 519 | 519 | 619 | 982 | 379 |
| | | **24** | $1149 | 519 | 519 | 650 | 1033 | 379 |
| | **29** | **13** | $991 | 519 | 519 | 565 | 948 | 379 |
| | | **17** | $1044 | 519 | 519 | 589 | 995 | 379 |

| | | | 84ATR | 84A5A | 84ANN | 84AN3 | 84PTR | 84P5A |
|---|---|---|---|---|---|---|---|---|
| **FZ114.** | **22** | **20** | $766 | 1142 | 548 | 548 | 644 | 1034 |
| | | **24** | $797 | 1195 | 548 | 548 | 674 | 1084 |
| | **29** | **13** | $705 | 1037 | 548 | 548 | 603 | 1004 |
| | | **17** | $736 | 1089 | 548 | 548 | 628 | 1045 |

| | | | 84PNN | 96ATR | 96A5A | 96ANN | 96AN3 | 96PTR |
|---|---|---|---|---|---|---|---|---|
| **FZ114.** | **22** | **20** | $395 | 797 | 1188 | 568 | 568 | 720 |
| | | **24** | $395 | 827 | 1240 | 568 | 568 | 750 |
| | **29** | **13** | $395 | 736 | 1082 | 568 | 568 | 684 |
| | | **17** | $395 | 766 | 1135 | 568 | 568 | 712 |

| | | | 96P5A | 96PNN |
|---|---|---|---|---|
| **FZ114.** | **22** | **20** | $1105 | 424 |
| | | **24** | $1155 | 424 |
| | **29** | **13** | $1065 | 424 |
| | | **17** | $1096 | 424 |

## Step 7. Top Cap Finish

| Metallic Paint | | |
|---|---|---|
| **CN** | metallic champagne | +$0 |
| **EH** | metallic bronze | +$0 |
| **MS** | metallic silver | +$0 |

| Sand Texture Paint | | |
|---|---|---|
| **8Q** | folkstone grey | +$0 |
| **91** | white | +$0 |
| **98** | studio white | +$0 |
| **BK** | black | +$0 |
| **CL** | cool grey neutral | +$0 |
| **G1** | graphite | +$0 |
| **WL** | sandstone | +$0 |
| **WN** | warm grey neutral | +$0 |

# Laminate Screen, Frame Top FZ120.

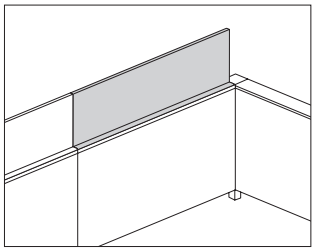

## Product Information

Description

This laminate screen attaches to the top of the 22"-high or 29"-high Channel frame to extend the overall height and to provide boundary. Bayonets extend through the top cap for attachment, which allows the screen to sit cleanly on the top cap. Frame top cap and attachment hardware included.

Notes

Specify width of screen to match width of frame.

24"-72" wide screens must match width of Channel frame.

Dimensions

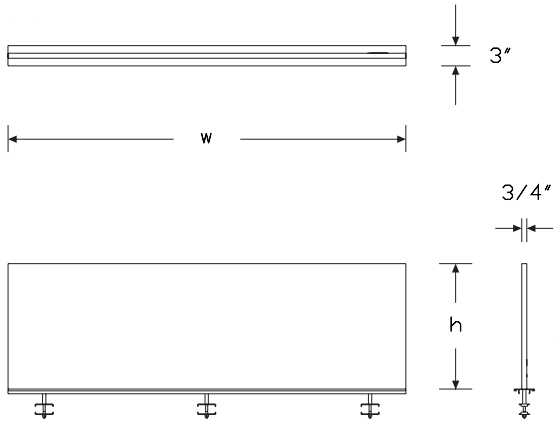


## Specification Information

Step 1.

**FZ120.**

Step 2. For use with Frame Height

**22** 22" high
**29** 29" high

Step 3. Screen Height

*For 22" high (22)*

**20** 20" high
**24** 24" high

*For 29" high (29)*

**13** 13" high
**17** 17" high

Step 4. Width

**24** 24" wide
**30** 30" wide
**36** 36" wide
**42** 42" wide
**48** 48" wide
**54** 54" wide
**60** 60" wide
**66** 66" wide
**72** 72" wide

Step 5. Surface Material

**L** laminate/thermoplastic edge
**U** laminate/universal edge

Step 6. Top Cap Material

**A** painted architectural top cap
**P** painted standard top cap

Prices for Steps 1-6.

| | | | 24LA | 24LP | 24UA | 24UP | 30LA | 30LP |
|---|---|---|---|---|---|---|---|---|
| **FZ120.** | **22** | **20** | $608 | 578 | 608 | 578 | 655 | 622 |
| | | **24** | $644 | 612 | 644 | 612 | 690 | 656 |
| | **29** | **13** | $557 | 530 | 557 | 530 | 604 | 575 |
| | | **17** | $608 | 578 | 608 | 578 | 641 | 610 |

| | | | 30UA | 30UP | 36LA | 36LP | 36UA | 36UP |
|---|---|---|---|---|---|---|---|---|
| **FZ120.** | **22** | **20** | $655 | 622 | 701 | 660 | 701 | 660 |
| | | **24** | $690 | 656 | 737 | 693 | 737 | 693 |

| | | | | | | | |
|---|---|---|---|---|---|---|---|
| **29** | **13** | $604 | 575 | 624 | 588 | 624 | 588 |
| | **17** | $641 | 610 | 675 | 635 | 675 | 635 |

| | | **42LA** | **42LP** | **42UA** | **42UP** | **48LA** | **48LP** |
|---|---|---|---|---|---|---|---|
| **FZ120. 22** | **20** | $748 | 703 | 748 | 703 | 795 | 740 |
| | **24** | $783 | 737 | 783 | 737 | 830 | 772 |
| **29** | **13** | $658 | 619 | 658 | 619 | 691 | 644 |
| | **17** | $708 | 667 | 708 | 667 | 742 | 690 |

| | | **48UA** | **48UP** | **54LA** | **54LP** | **54UA** | **54UP** |
|---|---|---|---|---|---|---|---|
| **FZ120. 22** | **20** | $795 | 740 | 841 | 782 | 841 | 782 |
| | **24** | $830 | 772 | 877 | 816 | 877 | 816 |
| **29** | **13** | $691 | 644 | 725 | 674 | 725 | 674 |
| | **17** | $742 | 690 | 775 | 722 | 775 | 722 |

| | | **60LA** | **60LP** | **60UA** | **60UP** | **66LA** | **66LP** |
|---|---|---|---|---|---|---|---|
| **FZ120. 22** | **20** | $887 | 825 | 887 | 825 | 907 | 844 |
| | **24** | $923 | 859 | 923 | 859 | 943 | 878 |
| **29** | **13** | $758 | 705 | 758 | 705 | 791 | 737 |
| | **17** | $809 | 753 | 809 | 753 | 842 | 783 |

| | | **66UA** | **66UP** | **72LA** | **72LP** | **72UA** | **72UP** |
|---|---|---|---|---|---|---|---|
| **FZ120. 22** | **20** | $907 | 844 | 927 | 862 | 927 | 862 |
| | **24** | $943 | 878 | 964 | 897 | 964 | 897 |
| **29** | **13** | $791 | 737 | 825 | 768 | 825 | 768 |
| | **17** | $842 | 783 | 876 | 815 | 876 | 815 |

### Step 7. Grain Direction

*For 24" wide (24), 30" wide (30), 36" wide (36), 42" wide (42), 48" wide (48), 54" wide (54), or 60" wide (60)*

| | | |
|---|---|---|
| **HRG** | horizontal grain | +$0 |
| **VTG** | vertical grain | +$0 |

*For 66" wide (66) or 72" wide (72)*

| | | |
|---|---|---|
| **HRG** | horizontal grain | +$0 |

### Step 8. Top Cap Finish

Metallic Paint

| | | |
|---|---|---|
| **CN** | metallic champagne | +$0 |
| **EH** | metallic bronze | +$0 |
| **MS** | metallic silver | +$0 |

Sand Texture Paint

| | | |
|---|---|---|
| **8Q** | folkstone grey | +$0 |
| **91** | white | +$0 |
| **98** | studio white | +$0 |
| **BK** | black | +$0 |
| **CL** | cool grey neutral | +$0 |
| **G1** | graphite | +$0 |
| **WL** | sandstone | +$0 |
| **WN** | warm grey neutral | +$0 |

### Step 9. Surface Finish

| | | |
|---|---|---|
| **76** | light brown walnut | +$0 |
| **8Q** | folkstone grey | +$0 |
| **91** | white | +$0 |
| **98** | studio white | +$0 |
| **CL** | cool grey neutral | +$0 |
| **HM** | natural maple | +$0 |
| **HP** | light anigre | +$0 |
| **HX** | aged cherry | +$0 |
| **HY** | walnut on cherry | +$0 |
| **LA** | light ash | +$0 |
| **LBA** | clear on ash | +$0 |
| **LBB** | oak on ash | +$0 |
| **LBC** | walnut on ash | +$0 |
| **LBD** | dark brown walnut | +$0 |
| **LBE** | medium red walnut | +$0 |
| **LBF** | neutral twill | +$0 |
| **LBG** | sarum twill | +$0 |
| **LBH** | earthen twill | +$0 |
| **LBJ** | graphite twill | +$0 |
| **LBK** | pewter mesh | +$0 |
| **LBL** | steel mesh | +$0 |
| **LBM** | crisp linen | +$0 |
| **LBN** | classic linen | +$0 |
| **LBP** | casual linen | +$0 |
| **LBQ** | white twill | +$0 |
| **LU** | soft white | +$0 |
| **WL** | sandstone | +$0 |
| **WN** | warm grey neutral | +$0 |

### Step 10. Edge Finish

*For laminate/thermoplastic edge (L)*

| | | |
|---|---|---|
| **76** | light brown walnut | +$0 |
| **8Q** | folkstone grey | +$0 |
| **91** | white | +$0 |
| **98** | studio white | +$0 |

# Laminate Screen, Frame Top

*continued*

| | | |
|---|---|---|
| **BU** | black umber | +$0 |
| **CL** | cool grey neutral | +$0 |
| **HF** | inner tone light | +$0 |
| **HM** | natural maple | +$0 |
| **HP** | light anigre | +$0 |
| **HX** | aged cherry | +$0 |
| **HY** | walnut on cherry | +$0 |
| **LA** | light ash | +$0 |
| **LBA** | clear on ash | +$0 |
| **LBB** | oak on ash | +$0 |
| **LBC** | walnut on ash | +$0 |
| **LBD** | dark brown walnut | +$0 |
| **LBE** | medium red walnut | +$0 |
| **LBF** | neutral twill | +$0 |
| **LBG** | sarum twill | +$0 |
| **LBH** | earthen twill | +$0 |
| **LBJ** | graphite twill | +$0 |
| **LBK** | pewter mesh | +$0 |
| **LBL** | steel mesh | +$0 |
| **LBM** | crisp linen | +$0 |
| **LBN** | classic linen | +$0 |
| **LBP** | casual linen | +$0 |
| **LBQ** | white twill | +$0 |
| **LBR** | phantom ecru | +$0 |
| **LBS** | phantom cocoa | +$0 |
| **LBU** | medium matte walnut | +$0 |
| **LBV** | warm grey teak | +$0 |
| **LU** | soft white | +$0 |
| **MT** | medium tone | +$0 |
| **WL** | sandstone | +$0 |
| **WN** | warm grey neutral | +$0 |

*For laminate/universal edge (U)*

| | | |
|---|---|---|
| **PLY** | plywood edge | +$50 |

# Index by Product Name




| Canvas Office Landscape® Channel | |
|---|---|
| 90° Connector Cover | page(s) 20 |
| 90° Connector Cover, Architectural | 21 |
| 90° Connector Top Cap | 29 |
| 90° Connector Top Cap, Architectural | 31 |
| 90° Universal Connector | 18 |
| 120° Connector Cover | 22 |
| 120° Connector Top Cap | 32 |
| 120° Universal Connector | 19 |
| Controlled Receptacle, 4-Circuit, 15 amp (package of 6) | 51 |
| Controlled Receptacle, 4-Circuit, 20 amp | 54 |
| Counterweight | 7 |
| Dual USB Charging Module, 2 Amp | 55 |
| Finished End | 23 |
| Finished End, Architectural | 24 |
| Flat Edge Screen, Frame Top | 60 |
| Frame | 5 |
| Frame-to-Frame Connection Hardware | 17 |
| Gallery Panel, Channel Attached | 8 |
| Glass Screen, Frame Top | 64 |
| Laminate Screen, Frame Top | 67 |
| Non-Structural Foot | 13 |
| Open Base Tile | 34 |
| Pari Screen, Frame Top | 56 |
| Power Entry - Ceiling | 46 |
| Power Entry, External Direct Connect | 44 |
| Power Entry, Internal Direct Connect - Floor | 43 |
| Power Entry, New York - Floor | 45 |
| Power Harness | 47 |
| Power Jumper | 48 |
| Receptacle, 4-Circuit, 15 amp (package of 6) | 49 |
| Receptacle, 4-Circuit, 20 amp | 53 |
| Structural Foot | 15 |
| Top Cap | 25 |
| Top Cap, Architectural | 27 |
| To-The-Floor Tiles | 38 |

# Index by Product Number


| | | |
|---|---|---|
| FW15U. | Dual USB Charging Module, 2 Amp | page(s) 55 |
| FZ11A. | Top Cap, Architectural | 27 |
| FZ12A. | 90° Connector Top Cap, Architectural | 31 |
| FZ12B. | 90° Connector Cover, Architectural | 21 |
| FZ16A. | Finished End, Architectural | 24 |
| FZ19D. | Counterweight | 7 |
| FZ110. | Frame | 5 |
| FZ112. | Top Cap | 25 |
| FZ113. | Gallery Panel, Channel Attached | 8 |
| FZ114. | Glass Screen, Frame Top | 64 |
| FZ115. | Pari Screen, Frame Top | 56 |
| FZ116. | Flat Edge Screen, Frame Top | 60 |
| FZ117. | Non-Structural Foot | 13 |
| FZ119. | Structural Foot | 15 |
| FZ120. | Laminate Screen, Frame Top | 67 |
| FZ121. | 90° Universal Connector | 18 |
| FZ123. | 90° Connector Cover | 20 |
| FZ126. | 90° Connector Top Cap | 29 |
| FZ128. | Frame-to-Frame Connection Hardware | 17 |
| FZ131. | 120° Universal Connector | 19 |
| FZ133. | 120° Connector Cover | 22 |
| FZ136. | 120° Connector Top Cap | 32 |
| FZ140. | Power Entry, External Direct Connect | 44 |
| FZ141. | Power Entry, New York - Floor | 45 |
| FZ142. | Power Entry - Ceiling | 46 |
| FZ144. | Power Entry, Internal Direct Connect - Floor | 43 |
| FZ150. | Power Harness | 47 |
| FZ152M | Controlled Receptacle, 4-Circuit, 15 amp (package of 6) | 51 |
| FZ152. | Receptacle, 4-Circuit, 15 amp (package of 6) | 49 |
| FZ153M | Controlled Receptacle, 4-Circuit, 20 amp | 54 |
| FZ153. | Receptacle, 4-Circuit, 20 amp | 53 |
| FZ154. | Power Jumper | 48 |
| FZ160. | Finished End | 23 |
| FZ170. | Open Base Tile | 34 |
| FZ375. | To-The-Floor Tiles | 38 |

# 20-Day or Less/Assigned Lead-Time Order Information



## 20-Day or Less and Assigned Lead-Time Programs

20-day or less and assigned lead-time products are designed for established Herman Miller dealers with pre-approved credit.

Products are distributed from multiple manufacturing facilities across the United States. All products and options not designated by an Assigned Lead-Time icon A will ship in 20 business days or less after being acknowledged by Herman Miller. Products and options designated by an A are on the assigned lead-time program and will ship in 20 days, less than 20 days, or more than 20 days from order acknowledgement.

## Ordering Procedure

Please place orders through Order Manager. If this is not available to you, place orders through mail or fax. Verbal purchase orders will not be accepted.

Order Entry fax number for Passage®, 5000 Series, and Meridian®
Filing and Storage: (616) 846 9236.
Order Entry fax number for all other products:
(616) 654 3085.

For more information, contact your Customer Care representative at: (866) 854 3048 EXT 3400.

## Shipments and Delivery

Per Herman Miller Terms and Conditions.

## Changes and Cancellation

Per Herman Miller Terms and Conditions.

## Stain-to-Match Program

### Program Overview

The Stain-to-Match program gives you the option of using veneer finishes that are not listed in the standard offering. The program allows Herman Miller to match a customer's existing recut or natural veneer, or create a new finish that is unique to an installation.

Specific information on approval, ordering, pricing, and warranty for the Stain-to-Match program is listed below. Questions and requests for assistance may be directed to Herman Miller Options at:

(800) 654 3910

### Stain-to-Match Process

1. Fill out the Options Stain-to-Match Request Form and send along with a color sample (2" x 3" minimum) to the Herman Miller Options Applications Team at the address provided on the form. The form can be found on Omni.
2. Within 7-10 working days, Herman Miller Options will send a sample of the color-matched stain on Herman Miller veneer to the requester for the customer's signed approval.
3. If the sample meets the customer 's approval, sign the reverse side of the sample, scan and email the approval to:
   options@hermanmiller.com.
4. After the stain has been approved, a formal quotation with special number and pricing can be provided, or the product can be specified through the Vary Easy program, if available. Work with the Options team on final product needs and how to specify.
5. A purchase order can then be placed.

### Stain-to-Match Warranty

Herman Miller warrants its products to be free from defects in craftsmanship from the date of delivery for the applicable warranty period. Herman Miller is responsible for the physical properties of the veneers available through the Stain-to-Match program, which include:

STA: Stain-to-Match on Recut Ash
STB: Stain-to-Match on Beech
STC: Stain-to-Match on Cherry
STD: Stain-to-Match on Oak
STK: Stain-to-Match on Reltech Anigre (Geiger)
STM: Stain-to-Match on Recut Mahogany
STP: Stain-to-Match on Maple
STU: Stain-to-Match on Walnut (Geiger)

See your specification tool for product specific finish offering limitations.

# Customer's Own Material Order Information — Workspaces



## Customer's Own Material

### Program Overview

The Customer's Own Material (COM) program gives you the option of using textiles other than those listed. Herman Miller will test textiles for application to Herman Miller products and will process orders for those with approved COM textiles only. COM textiles are on assigned lead times.

Omni lists an overview of fabrics that have been tested and indicates whether or not they were approved for application to Herman Miller products.

Specific information on the terms and conditions, testing, approval, and ordering process for COM is listed below. Questions about the COM program and requests for assistance may be directed to your COM representative at:
(616) 654 3400
(866) 854 3048 EXT 6543400

### Customer's Own Material Warranty

Herman Miller does not warrant COM textiles. COM textiles are tested for application only; they are not tested for performance. The Herman Miller warranty does apply to the underlying products.

Suppliers of COM textiles are responsible for color consistency within commercial tolerances, UV stability, and resistance to soiling and perspiration.

### Customer's Own Material Pricing

COM is a Category 1 fabric. There are no application charges for COM fabrics.

Ordering and payment for COM textile yardage are the responsibility of the customer and the textile supplier.

If desired, Herman Miller will purchase COM textiles directly from True Textiles, C.F. Stinson, Luna Textiles, Maharam, and Momentum Textiles to simplify ordering and shipment. For this service, refer to the Supplier Connection program.

### Application Note

Herman Miller does not guarantee that Customer's Own Material (COM) fabric patterns will align across panels/tiles or from one screen to the next. We also do not guarantee that COM fabric designs will be positioned consistently in the same location across several panels, tiles, or screens.

### Textile Approval

1. Select a COM textile and a Herman Miller product.
2. If your textile is not listed in Omni, obtain a test number from a COM representative at (616) 654 3400. You can also submit your request within Omni. Please have the following information ready before calling: textile name, number, pattern, and the product you will apply it to.
3. Herman Miller will notify you of approval or disapproval within 4 days from receipt of the test yardage.

### Ordering Products with COM

1. Refer to the specific products to determine the yardage required for COM textiles.
2. If your textile is not listed in Omni, call a COM representative at (616) 654 3400 or (866) 854 3048 EXT 6543400. The representative will assign an identification number for your textile (ID#) and will verify yardage requirements for your order.
   *Note: Yardage requirements are based on nondirectional, 54"-wide textiles. 66"-wide textiles are needed for application on 60"-wide products. Additional yardage may be needed due to the unique characteristics of a textile.*
3. Enter your order on Order Manager in Omni.
4. Upon receipt of your purchase order, Herman Miller will send you a PO acknowledgment.
5. Arrangements must be made for the textiles to be shipped from the supplier to Herman Miller for application to the Herman Miller products. Textiles must be tagged with the assigned identification number and the roll yardage quantity. See Omni for shipping procedures and current shipping addresses or contact a COM representative at (616) 654 3400 or (866) 854 3048 EXT 6543400.

   Products will be scheduled for production when COM textiles are received at Herman Miller. Standard lead times in effect at that time will apply.

   *Note: If textiles are to be purchased directly by Herman Miller through the Supplier Connection program, Herman Miller will handle the ordering and shipping process and will schedule your order for production upon receipt of your purchase order (dependent on textile availability). Refer to the Supplier Connection program for more information.*

## Supplier Connection

### Program Overview

The Supplier Connection program is a service offered by Herman Miller to purchase approved COM textiles directly from True Textiles, C.F. Stinson, Luna Textiles, Maharam, and Momentum Textiles. When you select a textile through this program, Herman Miller will facilitate the ordering, scheduling, and shipment of the textile directly with the supplier.

Suppliers included in the Supplier Connection program keep an active inventory of textiles that are pre-approved for application to Herman Miller products. Pre-approval applies only to the suitability of a textile for manufacturing and application to a Herman Miller product. Omni provides an overview of fabrics that have been tested and indicates whether or not they were approved for application to Herman Miller products.

Specific information on the terms and conditions, testing, approval, and ordering process for the Supplier Connection program is listed below. Questions and requests for assistance may be directed to your COM representative at:
(616) 654 3400
(866) 854 3048 EXT 6543400

### Supplier Connection Warranty

Textiles purchased by Herman Miller through the Supplier Connection program are COM and are not warranted by Herman Miller. COM textiles are tested for application only; they are not tested for performance. The Herman Miller warranty does apply to the underlying products.

Suppliers of COM textiles are responsible for color consistency within commercial tolerances, UV stability, and resistance to soiling and perspiration.

### Supplier Connection Pricing

Textiles purchased by Herman Miller through the Supplier Connection program are COM. COM is a Category 1 fabric. There are no application charges for COM fabrics.

Payment for textiles purchased by Herman Miller through the Supplier Connection program is the responsibility of the customer or dealer. Herman Miller will invoice the order at the supplier's prices published at the time of the order.

### Textile Approval

1. Refer to Omni to identify the approval status of the textile. If your textile is not listed, contact the COM Department to request testing for application to Herman Miller products.
2. Herman Miller will notify you of approval or disapproval in approximately 4 days from receipt of the test yardage. If the textile is approved, it will be assigned a COM identification number.

### Ordering Products with Supplier Connection COM

1. Identify and include the following information on your purchase order:
   - Product number and option
   - Herman Miller's COM identification number
2. Enter your order on Order Manager in Omni.
3. Upon receipt of the purchase order, Herman Miller will process your order and send you a PO acknowledgment. Herman Miller will determine the yardage required to produce your product and will order and schedule for delivery the required textile. Standard lead times in effect at the time the textile is allocated at the supplier will apply to products ordered through this program.

# Proprietary Textiles Application Chart — Workspaces

• *Available*

A *Assigned lead-time textile.*

*See page 3 for exception notes.*

| | Action Office® Panels/Connectors | Action Office/Ethospace® B-Style Storage | Action Office B-Style Tackboards | Action Office/Ethospace E-Style Storage | Ethospace Tiles/Connectors | Ethospace Work Surface-Attached Screens | Ethospace/Canvas Office Landscape® Privacy Doors | Canvas Tiles/Extended Width Tiles/Channel Tiles | Canvas B-/E-Style Storage | Canvas Standing Screen and Team Wall Infill | Canvas Tackboards | Canvas Vista™ Movable Insert and Display Unit | Layout Studio® Framed Screen | Locale® Display Tackboard | Locale Freestanding Screen and Workbase Screen | Locale L-Desk/D-Desk Screens | Overlay™ Performance Wall Cladding | Pari™ Screens/Flat Edge Screens/Channel Screens | Prospect™ Exterior Acoustic Pad | Public Office Landscape® Screen/Desk Top Divider | Renew™ Link Screens | Resolve® Boundary Screens/Flags | Resolve Display Screens | Resolve Rolling Screens/Canopies | Exclave® Tackable Boards and Stowage Tackable Backdrop | Exclave Video-Friendly Tackable Boards and Stowage Tackable Backdrop | Intersect® Screens | Personal Side Screen | Tu® Wood Storage Cubby Tackboard | Seating |
|---|---|---|---|---|---|---|---|---|---|---|---|---|---|---|---|---|---|---|---|---|---|---|---|---|---|---|---|---|---|---|
| **Price Category 1** | | | | | | | | | | | | | | | | | | | | | | | | | | | | | | |
| COM Customer's Own Material A | 1 | 1 | 1 | 1 | 1 | | 1 | 1 | 1 | 1 | • | | 1 | 1 | 1 | | | 1 | | 1 | 1 | 1 | | | | | 1 | 1 | | 1 |
| 8A_ _ Bubbletack™ | | | | | | | | | | | | | | | | | | | | | | | • | | | | | | | |
| 2V_ _ Chain | • | • | • | • | • | | • | 22 | • | • | • | • | • | • | • | | • | • | | • | • | | | | | | • | | • | |
| 8T_ _ Crossing (85_ _) | 2 | 2 | 2 | • | • | | • | • | 2 | • | • | | • | • | • | • | • | • | • | • | • | | | | • | 8 | • | | • | 18 |
| 3DE_ _ Dex | 6 | 2 | 2 | • | • | | • | • | 2 | • | • | | • | • | • | • | • | • | | • | • | | | | • | | • | • | • | • |
| 95_ _ Gem | 2 | 2 | 2 | • | • | | • | • | 2 | • | • | | • | • | | | • | | | | | | | | | | • | • | • | • |
| 2I_ _ Grasscloth | • | • | • | • | • | | • | • | • | • | • | • | | • | • | • | • | • | • | • | • | | | | | | • | • | • | |
| 1MN_ _ Monologue | 2 | 2 | 2 | • | • | | • | • | 2 | • | • | • | • | • | • | • | • | • | | • | • | | | | | | • | • | • | • |
| 8B_ _ Multiscrim™ | | | | | | • | | | | | | | | | | | | | | | | • | | • | | | | | | |
| 5T_ _ Resonance | • | • | • | • | • | | • | • | • | • | • | • | • | • | | | • | | | | | | | | | | • | • | • | |
| 8C_ _ Scrim Trim | | | | | | | | | | | | | | | | | | | | | | | | • | | | | | | |
| 2M_ _ Silkworm | • | • | • | • | • | | • | • | • | • | • | • | • | • | | | • | | | | | | | | | | • | • | • | |
| 22F_ _ Slant | 6 | | • | | • | | • | • | | • | • | • | • | • | | | • | | | | | | | | | | • | | • | |
| 235_ _ Tailored A | • | • | | • | • | | • | 8 | • | • | • | • | | • | | | • | | | | | | | | | | • | | • | • |
| 1WS_ _ Whisper | 2 | 2 | 2 | • | • | | • | • | 2 | • | • | • | • | • | • | • | • | • | • | • | • | | | | • | | • | • | | • |
| **Price Category 2** | | | | | | | | | | | | | | | | | | | | | | | | | | | | | | |
| 3AR_ _ Aristo | 2 | 2 | 2 | • | • | | • | • | 2 | • | • | | • | • | • | • | • | • | | • | • | | | | • | | • | • | • | • |
| 1CD_ _ Code | • | • | • | • | • | | • | • | • | • | • | • | • | • | | | • | | | | | | | | • | | • | | | |
| 51_ _ Cord | • | • | • | • | • | | • | • | • | • | • | • | • | • | | | • | | | | | | | | | | • | | • | |
| 92_ _ Crepe | 2 | • | • | • | • | | • | • | • | • | • | • | • | • | | | • | | • | | | | | | • | 8 | • | • | | • |
| 3EP_ _ Epic | 2 | 2 | 2 | • | • | | • | • | 2 | • | • | | • | • | • | • | • | • | | • | • | | | | • | | • | • | • | • |
| 22Q_ _ Fish Net | | 2 | 2 | • | • | | • | • | 2 | • | | • | • | | | | • | • | • | | • | | | | | | | | | • |
| 57_ _ Frost | • | • | • | • | • | | • | • | • | • | • | • | • | • | • | | • | • | | • | • | | | | | | • | • | • | |
| 84_ _ Grosgrain | 4 | • | • | • | • | | • | 8 | • | • | | • | • | 19 | | | • | | | | | | | | | | • | 19 | • | |
| 4N_ _ Horizon | 2 | 2 | 2 | • | • | | • | • | • | • | • | • | • | • | | | • | | | | | | | | | | • | • | • | |
| 1LM_ _ Loom | 2 | 2 | 2 | • | | | • | • | • | | • | | • | • | • | | • | • | | • | • | | | | • | | • | | | • |
| 1HA_ _ Medley | 2 | 2 | 2 | • | • | | • | • | • | • | • | • | • | • | • | • | • | • | • | • | • | | | | • | 8 | • | • | | • |
| 3A_ _ Moiré | | 2 | 2 | • | • | | • | 22 | 2 | • | • | • | • | • | • | | • | • | | • | • | | | | | | | | • | • |
| 1RV_ _ Rivet | 2 | 2 | 2 | • | • | | • | • | 2 | • | • | • | | | • | | • | • | • | • | • | | | | | | | • | • | • |
| 3SL_ _ Sequel | | 2 | | | | | | | 2 | | | | | | | | | | | | | | | | | | | | | • |
| 8R_ _ Twist (5S_ _) | 5 | 2 | 2 | • | • | | • | • | 2 | • | • | • | • | • | • | • | • | • | • | • | • | | | | | | • | • | • | 18 |
| 22T_ _ Well Suited | | 2 | | • | • | | | • | 2 | • | | • | | | | | • | | | | | | | | | | | | | • |

*continued on next page*

# Proprietary Textiles Application Chart — Workspaces

*continued*

| | Action Office® Panels/Connectors | Action Office/Ethospace® B-Style Storage | Action Office B-Style Tackboards | Action Office/Ethospace E-Style Storage | Ethospace Tiles/Connectors | Ethospace Work Surface-Attached Screens | Ethospace/Canvas Office Landscape® Privacy Doors | Canvas Tiles/Extended Width Tiles/Channel Tiles | Canvas B-/E-Style Storage | Canvas Standing Screen and Team Wall Infill | Canvas Tackboards | Canvas Vista™ Movable Insert and Display Unit | Layout Studio® Framed Screen | Locale® Display Tackboard | Locale Freestanding Screen and Workbase Screen | Locale L-Desk/D-Desk Screens | Overlay™ Performance Wall Cladding | Pari™ Screens/Flat Edge Screens/Channel Screens | Prospect™ Exterior Acoustic Pad | Public Office Landscape® Screen/Desk Top Divider | Renew™ Link Screens | Resolve® Boundary Screens/Flags | Resolve Display Screens | Resolve Rolling Screens/Canopies | Exclave® Tackable Boards and Stowage Tackable Backdrop | Exclave Video-Friendly Tackable Boards and Stowage Tackable Backdrop | Intersect® Screens | Personal Side Screen | Tu® Wood Storge Cubby Tackboard | Seating |
|---|---|---|---|---|---|---|---|---|---|---|---|---|---|---|---|---|---|---|---|---|---|---|---|---|---|---|---|---|---|---|
| **Price Category 3** | | | | | | | | | | | | | | | | | | | | | | | | | | | | | | |
| 70_ _ Bento | 2 | 2 | 2 | • | | | | • | 2 | • | • | • | | • | • | | • | • | | • | • | | | | | | • | | • | • |
| 1FB _ Connection | • | • | • | • | • | | • | • | • | • | • | • | • | • | • | | | | | • | | | | | | | • | • | • | |
| 1FC _ Current | • | • | • | • | • | | • | • | • | • | • | • | • | • | • | | | | | • | | | | | | | • | • | • | |
| 8Z_ _ Glaze | • | • | • | • | • | | • | • | • | • | • | • | • | • | | | • | | | | | | | | | | • | • | • | |
| 47_ _ Ground Cloth® | • | • | • | • | • | | • | • | • | • | • | • | • | • | • | | • | • | | • | • | 14 | | | • | 8 | • | • | • | |
| 5D_ _ Kira 2 | 2 | 2 | 2 | • | • | | • | • | 2 | • | • | • | • | • | • | | • | • | | • | • | 14 | | | | | • | • | • | |
| 22R_ _ Pins and Needles | 2 | 2 | | • | • | | • | • | 2 | • | • | • | • | • | | | • | | | | | | | | | | • | | | • |
| 8L_ _ Savannah | • | 20 | • | • | • | | • | • | • | • | • | • | • | • | | | • | | • | | | 14 | | | | | | | • | |
| 8W_ _ Strands | • | • | • | • | • | | • | • | • | • | • | | • | • | • | | • | • | | • | • | | | | | | • | • | • | |
| 22V_ _ String Plaid | 2 | 2 | 2 | • | | | • | • | 2 | • | • | • | • | • | • | | • | • | | • | • | | | | | | • | | | • |
| **Price Category 4** | | | | | | | | | | | | | | | | | | | | | | | | | | | | | | |
| 2X_ _ Glisten | • | • | • | • | • | | • | • | • | • | • | • | • | • | | | • | | | | • | | | | | | • | | • | |
| 22L_ _ Loft [A] | | 2 | 2 | • | • | | • | • | 2 | • | • | • | • | • | • | • | • | • | • | • | • | | | | • | 8 | • | • | • | |
| 6S_ _ Quilty | 2 | 2 | 2 | • | • | | • | • | 2 | | | | • | • | | | • | | | | | | | | | | • | • | | • |
| **Price Category 5** | | | | | | | | | | | | | | | | | | | | | | | | | | | | | | |
| 14A_ _Hopsak | 2 | 2 | 2 | • | • | | | • | 2 | • | • | • | • | • | | | • | | | | | | | | • | | • | | • | • |
| **Price Category 6** | | | | | | | | | | | | | | | | | | | | | | | | | | | | | | |
| No fabrics available at this time. | | | | | | | | | | | | | | | | | | | | | | | | | | | | | | |

1 *Refer to price book appendices and Omni for COM information.*

2 *Available on all products except 54" and 60" wide.*

4 *Not available on Action Office (AO®) acoustical panels.*

5 *(8R_ _), (8T_ _), (85_ _), and (5S_ _) not available on AO acoustical panels and not available on 54"- or 60"-wide products.*

6 *Not available on Action Office (AO®) connectors, cable management, and spacers.*

8 *Available in select colors. See the "Proprietary Textile Colors — Workspaces" appendix.*

14 *Not available on Resolve flags.*

18 *Available on seating products in select colors. See the "Proprietary Textile Colors — Seating" appendix.*

19 *Not available in Grosgrain (84_ _) fabric colors 8401, 8405, and 8413.*

20 *Available only on Ethospace B-Style.*

22 *Not available as railroaded application option for* Chain *(2V00) and* Moiré *(3A00) on Canvas Extended Width Tiles.*

*Application Note: Herman Miller cannot guarantee material/pattern alignment in adjacent products. For example, a fabric's pattern may not align from one screen to the next, or from one panel to the next.*

**Price Category 1**

| Customer's Own Material | |
|---|---|
| See Order Information in Appendices. | |
| Assigned lead-time textile. A | |

| Bubbletack™ | |
|---|---|
| 100% polyester | |
| 8A01 | Seashell White |
| 8A02 | Pearl Grey |
| 8A19 | Spa Blue |
| 8A24 | Sable Grey |
| 8A27 | Summer White |
| 8A28 | Moth Grey |
| 8A30 | Blue Grey |
| 8A31 | Dusty Bronze |
| 8A32 | Slate Blue |
| 8A35 | Studio White |
| 8A36 | Blush Grey |
| 8A37 | Shale |
| 8A38 | Slate |
| 8A39 | Eggnog |
| 8A40 | Persimmon |
| 8A41 | Bud |

| Chain | |
|---|---|
| 66" wide | |
| 100% recycled polyester | |
| 2V01 | Pearl |
| 2V02 | Oyster |
| 2V03 | Wheat |
| 2V04 | Linen |
| 2V05 | Wicker |
| 2V06 | Bamboo |
| 2V07 | Sage |
| 2V08 | Spring Wood |
| 2V09 | Iceberg |

| Crossing | |
|---|---|
| 54" wide | |
| 86% antimony-free polyester | |
| 14% polyester | |
| 8T03 | Wicker * |
| 8T04 | Porcelain * |
| 8T05 | Warm Grey * |
| 8T06 | Sepia |
| 8T07 | Pumpkin |
| 8T08 | Copper |
| 8T09 | Cranberry |
| 8T10 | Tomato |
| 8T11 | Mulberry |
| 8T12 | Plum |
| 8T13 | Green Apple |
| 8T14 | Loden |
| 8T15 | Spruce |
| 8T16 | Periwinkle |
| 8T17 | Cerulean |
| 8T18 | Indigo |
| 8T19 | Shale * |
| 8T20 | Brownstone |
| 8T21 | Bark |
| 8T22 | Tin * |
| 8T23 | Graphite |
| 8T24 | Black |

| Crossing | |
|---|---|
| For workspaces products only. | |
| 54" wide | |
| 86% antimony-free polyester | |
| 14% polyester | |
| 8501 | Ivory * |
| 8502 | Oyster * |

* Colors available on Exclave® Video-friendly Tackable Boards and Stowage Tackable Backdrop

| Dex | |
|---|---|
| 54" wide | |
| 50% recycled polyester | |
| 50% polyester | |
| 3DE01 | Frost |
| 3DE02 | Silver Pine |
| 3DE03 | Stone |
| 3DE04 | Shale |
| 3DE05 | Charcoal |

| Gem | |
|---|---|
| 54" wide | |
| 100% antimony-free polyester | |
| 9502 | Tangerine |
| 9503 | Red |
| 9507 | Twilight |
| 9508 | Bayou |
| 9510 | Berry Blue |
| 9511 | Aqua Green |
| 9512 | Green Apple |
| 9514 | Black |
| 9515 | Slate Grey |
| 9516 | Fog |

| Grasscloth | |
|---|---|
| 66" wide | |
| 100% recycled polyester | |
| 2I01 | Silver Birch |
| 2I02 | Pampas |
| 2I03 | Sedge |
| 2I07 | Lea |
| 2I08 | Taro |
| 2I09 | Steam Grey |
| 2I10 | Cayenne |
| 2I11 | Bottle Green |
| 2I12 | Surf |
| 2I13 | Gravel |

| Monologue | |
|---|---|
| 54" wide | |
| 56% recycled polyester | |
| 44% polyester | |
| 1MN01 | Linen |
| 1MN02 | Alabaster |
| 1MN03 | Truffle |
| 1MN04 | Folkstone |
| 1MN05 | Silver Pine |
| 1MN06 | Slate |
| 1MN07 | Seed |
| 1MN08 | Yellow Oxide |
| 1MN09 | Persimmon |
| 1MN10 | Tundra |
| 1MN11 | Meadow |
| 1MN12 | Blue Sky |
| 1MN13 | Blue Spruce |
| 1MN14 | Deep Sea |

| Multiscrim™ | |
|---|---|
| 60" wide | |
| 100% polyester | |
| 8B01 | Seashell White |
| 8B02 | Pearl Grey |
| 8B19 | Spa Blue |
| 8B24 | Sable Grey |
| 8B27 | Summer White |
| 8B28 | Moth Grey |
| 8B30 | Blue Grey |
| 8B31 | Dusty Bronze |
| 8B32 | Slate Blue |
| 8B35 | Studio White |
| 8B36 | Blush Grey |
| 8B37 | Shale |
| 8B38 | Slate |
| 8B39 | Eggnog |
| 8B40 | Persimmon |
| 8B41 | Bud |

*Price category 1 continued on next page*

**Price Category 1**
*continued*

**Price Category 2**



| Resonance | |
|---|---|
| 66” wide | |
| 100% polyester | |
| 5T04 | Greige |
| 5T05 | Porcelain |
| 5T06 | Alabaster |
| 5T15 | Iris |
| 5T28 | Sugar |
| 5T47 | Tobacco |
| 5T54 | Saltbush |
| 5T57 | Seed |
| 5T58 | Sepia |
| 5T60 | Iceberg |
| 5T65 | Red |
| 5T67 | Boysenberry |
| 5T68 | Pistachio |
| 5T69 | Green Apple |
| 5T71 | Jade |
| 5T72 | Blue Green |
| 5T74 | Twilight |

| Scrim Trim | |
|---|---|
| 61” wide | |
| 82% polyester | |
| 18% spandex | |
| 8C01 | Seashell White |
| 8C02 | Pearl Grey |
| 8C22 | Winter Grey |
| 8C24 | Sable Grey |

| Silkworm | |
|---|---|
| 66” wide | |
| 58% recycled polyester | |
| 42% polyester | |
| 2M01 | Cocoon |
| 2M02 | Pongee |
| 2M03 | Saffron |
| 2M04 | Tussah |
| 2M05 | Ceylon |
| 2M06 | Jasmine |
| 2M07 | Shale |
| 2M08 | Monsoon |

| Slant | |
|---|---|
| 66” wide | |
| 51% polyester | |
| 49% recycled polyester | |
| 22F04 | Pesto |
| 22F06 | Neptune |
| 22F07 | Blueberry |
| 22F10 | Pumpkin |
| 22F12 | Silver Birch |
| 22F13 | Bluestone |
| 22F15 | Shale |

| Tailored | |
|---|---|
| Assigned lead-time textile. A | |
| 54” wide | |
| 56% polyester | |
| 44% recycled polyester | |
| 23501 | Studio White * |
| 23502 | Sugar |
| 23503 | Tomato |
| 23504 | Orchid |
| 23505 | Boysenberry |
| 23506 | Chive |
| 23507 | Bluegrass |
| 23508 | Cobalt |
| 23509 | Cadet |
| 23510 | Fog |
| 23511 | Graphite |
| 23512 | Black |
| 23513 | Coffee |

* Color not available on Canvas Tiles.

| Whisper | |
|---|---|
| 54” wide | |
| 73% recycled polyester | |
| 27% polyester | |
| 1WS01 | Sand Dollar |
| 1WS02 | Pebble |
| 1WS03 | Silver Birch |
| 1WS04 | Iceberg |
| 1WS05 | Silver Pine |
| 1WS06 | Carbon |
| 1WS07 | Cumin |
| 1WS08 | Adobe |
| 1WS09 | Strawberry |
| 1WS10 | Blush |
| 1WS11 | Eggplant |
| 1WS12 | Willow |
| 1WS13 | Sea Grass |
| 1WS14 | Pool |
| 1WS15 | Blueberry |

| Aristo | |
|---|---|
| 54” wide | |
| 88% recycled polyester | |
| 12% polyester | |
| Acrylic backing | |
| 3AR01 | Forest Moss |
| 3AR02 | Light Brindle |
| 3AR03 | Mink |
| 3AR04 | Copper |
| 3AR05 | Adobe |
| 3AR06 | Cherry |
| 3AR07 | Lilac |
| 3AR08 | Green Apple |
| 3AR09 | Surf |
| 3AR10 | Waterfall |
| 3AR11 | Cadet |
| 3AR12 | Tin |
| 3AR13 | Pewter |
| 3AR14 | Grey Brindle |
| 3AR15 | Grey Black |

| Code | |
|---|---|
| 66” wide | |
| 100% Repreve recycled polyester | |
| 1CD01 | Linen |
| 1CD02 | Khaki |
| 1CD03 | Iceberg |
| 1CD04 | Zinc |
| 1CD05 | Blue Black |

*Price category 2 continued on next page*

**Price Category 2**
*continued*

| Cord | |
|---|---|
| 66” wide | |
| 51% antimony-free polyester | |
| 49% polyester | |
| 5101 | Ivory |
| 5102 | White Ash |
| 5103 | Linen |
| 5104 | Bamboo |
| 5105 | Sepia |
| 5106 | Wicker |
| 5107 | Sesame |
| 5108 | Kiwi Green |
| 5109 | Bayou |
| 5110 | Shade |
| 5111 | Spring Wood |
| 5112 | Summer White |

| Crepe | |
|---|---|
| 54” wide | |
| 100% recycled polyester | |
| 9201 | Licorice |
| 9203 | Smoke |
| 9207 | Cherry |
| 9209 | Claret |
| 9212 | Raisin |
| 9218 | Aquamarine |
| 9223 | Cadet |
| 9241 | Beachglass |
| 9243 | Midnight |
| 9244 | Artichoke |
| 9248 | Warm White * |
| 9249 | Stone * |
| 9250 | Earth |
| 9251 | Fog * |
| 9252 | Slate Grey |
| 9253 | Yellow Dark |
| 9254 | Coral |
| 9255 | Blush Grey * |
| 9256 | Wild Berry |
| 9257 | Clover |
| 9258 | Caribbean |
| 9259 | Cerulean |
| 9260 | Brownstone |
| 9261 | Shale |
| 9262 | Graphite |
| 9263 | Tomato |
| 9264 | Green Apple |

* Colors available on Exclave® Video-friendly Tackable Boards and Stowage Tackable Backdrop.

| Epic | |
|---|---|
| 54” wide | |
| 56% recycled polyester | |
| 44% polyester | |
| Acrylic backing | |
| 3EP01 | Alabaster |
| 3EP02 | Smoke |
| 3EP03 | Falcon |
| 3EP04 | Citrus Spring |
| 3EP05 | Copper |
| 3EP06 | Urban Orange |
| 3EP07 | Poppy |
| 3EP08 | Wild Plum |
| 3EP09 | Sugar Plum |
| 3EP10 | Clover |
| 3EP11 | Loden |
| 3EP12 | Everglade |
| 3EP13 | Mist |
| 3EP14 | Peacock |
| 3EP15 | Cadet |
| 3EP16 | Indigo |
| 3EP17 | Spring Wood |
| 3EP18 | Grey Brindle |
| 3EP19 | Seed |
| 3EP20 | Carbon Dark |

| Fish Net | |
|---|---|
| 55” wide | |
| 100% recycled polyester | |
| 22Q01 | Oyster |
| 22Q02 | Stone |
| 22Q03 | Citrus |
| 22Q04 | Curry |
| 22Q05 | Chipotle |
| 22Q06 | Cherry |
| 22Q07 | Fuschia |
| 22Q08 | Claret |
| 22Q09 | Purple |
| 22Q10 | Clover |
| 22Q11 | Pesto |
| 22Q12 | Peacock |
| 22Q13 | Lagoon |
| 22Q14 | Twilight |
| 22Q15 | Bluestone |
| 22Q16 | Storm |
| 22Q17 | Black |
| 22Q18 | Cocoa |

| Frost | |
|---|---|
| 66” wide | |
| 100% recycled polyester | |
| 5703 | Porcelain |
| 5704 | Honey |
| 5705 | Iceberg |
| 5706 | Sage |
| 5710 | Sable Grey |

*Price category 2 continued on next page*

**Price Category 2**
*continued*



**Grosgrain**
66” wide
100% recycled polyester

| | |
|---|---|
| 8401 | Pearl * ** |
| 8402 | White Ash |
| 8403 | Warm Grey |
| 8404 | Khaki |
| 8405 | Oyster * |
| 8406 | Celadon |
| 8408 | Spa Blue |
| 8409 | Bud |
| 8410 | Kiwi Green |
| 8411 | Bayou |
| 8412 | Tin |
| 8413 | Iceberg * |

* Colors not available on Canvas Dock Mounted Screens, Locale® Workbase Screen, Public Office Landscape® Screen/Desk Top Divider, and Thrive® Personal Side Screen.
** Color not available on Canvas Tiles.

**Horizon**
54” wide
65% antimony-free polyester
35% polyester

| | |
|---|---|
| 4N01 | Rye Grass |
| 4N02 | Sugar Pine |
| 4N03 | Silver Pine |
| 4N04 | White Ash |
| 4N05 | Spring Wood |
| 4N06 | Tamarack |
| 4N07 | Mushroom |
| 4N08 | Haystack |
| 4N09 | Oat Grass |
| 4N10 | Forest Moss |
| 4N11 | Hickory |
| 4N12 | Beech Nut |
| 4N13 | Pine Cone |
| 4N14 | Poplar |
| 4N15 | Elderberry |

**Loom**
54” wide
100% polyester

| | |
|---|---|
| 1LM01 | Linen |
| 1LM02 | Brown Sugar and Spice |
| 1LM03 | Brick and Mortar |
| 1LM04 | Salt and Pepper |
| 1LM05 | Black |
| 1LM06 | Lemongrass |
| 1LM07 | Poppy |
| 1LM08 | Wild Berry |
| 1LM09 | Loden |
| 1LM10 | Jade |
| 1LM11 | Deep Sea |

**Medley**
54” wide
100% polyester

| | |
|---|---|
| 1HA01 | Stone * |
| 1HA02 | Trail |
| 1HA03 | Charcoal |
| 1HA04 | Cinder |
| 1HA05 | Citrus |
| 1HA06 | Papaya |
| 1HA07 | Chutney |
| 1HA08 | Tundra |
| 1HA09 | Feather Grey * |
| 1HA10 | Chartreuse |
| 1HA11 | Loden |
| 1HA12 | Peacock |
| 1HA13 | Bayou * |
| 1HA14 | Blue Grotto |
| 1HA15 | Blueberry |
| 1HA22 | Khaki |
| 1HA23 | Pewter |
| 1HA24 | Yellow Oxide |
| 1HA25 | Vintage Rose |
| 1HA26 | Raspberry |
| 1HA27 | Acai Berry |

* Colors available on Exclave® Video-friendly Tackable Boards and Stowage Tackable Backdrop

**Moiré**
54” wide
100% recycled polyester

| | |
|---|---|
| 3A01 | Concrete |
| 3A02 | Biscotti |
| 3A03 | Rattan |
| 3A04 | Chambray |
| 3A05 | Fern |
| 3A08 | Violet |
| 3A09 | Zin |
| 3A10 | Curry |
| 3A11 | Spice |
| 3A12 | Cork |

**Rivet**
54” wide
100% recycled polyester

| | |
|---|---|
| 1RV01 | Twig |
| 1RV02 | Deep Clay |
| 1RV03 | Woodrose |
| 1RV04 | Otter |
| 1RV05 | Hemlock |
| 1RV06 | Olive |
| 1RV07 | Lagoon |
| 1RV08 | Deep Sea |
| 1RV09 | Charcoal |
| 1RV10 | Grey Brindle |

**Sequel**
54” wide
100% vinyl
100% polyester knit backing
Resilience® finish

| | |
|---|---|
| 3SL01 | White |
| 3SL02 | Pebble |
| 3SL03 | Mushroom |
| 3SL04 | Stone |
| 3SL05 | Chestnut |
| 3SL06 | Rattan |
| 3SL07 | Black Cherry |
| 3SL08 | Tundra |
| 3SL09 | Seal |
| 3SL10 | Blue Fog |
| 3SL11 | Folkstone |
| 3SL12 | Shale |
| 3SL13 | Slate Grey |
| 3SL14 | Charcoal |
| 3SL15 | Carbon Dark |

**Twist**
54” wide
80% antimony-free polyester
13% recycled polyester
7% polyester

| | |
|---|---|
| 8R05 | Wicker |
| 8R10 | Poppy |
| 8R14 | Tin |
| 8R15 | Shale |
| 8R16 | Graphite |
| 8R17 | Birch |
| 8R18 | Sepia |
| 8R22 | Blueberry |
| 8R23 | Green Apple |
| 8R26 | Gunmetal |
| 8R27 | Cinder |
| 8R28 | Citrus |
| 8R29 | Pekoe |
| 8R30 | Tangerine |
| 8R31 | Red Plum |
| 8R32 | Wisteria |
| 8R33 | Forest |
| 8R34 | Jade Dark |
| 8R35 | Waterfall |
| 8R36 | Midnight Blue |
| 8R37 | Carbon Dark |

**Twist**
For workspaces products only.
54” wide
80% antimony-free polyester
13% recycled polyester
7% polyester

| | |
|---|---|
| 5S01 | Pearl |
| 5S02 | Ivory |
| 5S03 | Oyster |

*Price category 2 continued on next page*

**Price Category 2**
*continued*

| Well Suited | |
|---|---|
| 55” wide | |
| 79% polyester | |
| 21% recycled polyester | |
| 22T01 | Oyster |
| 22T02 | Raffia |
| 22T03 | Peppermint |
| 22T08 | Cool Grey |
| 22T16 | Jade |
| 22T17 | Peacock |
| 22T18 | Blueberry |

**Price Category 3**

| Bento | |
|---|---|
| 54” wide | |
| 100% antimony-free polyester | |
| 7001 | Frost |
| 7002 | Linen |
| 7003 | Khaki |
| 7004 | Truffle |
| 7005 | Grey Black |
| 7006 | Pumpkin |
| 7007 | Cranberry |
| 7008 | Everglade |
| 7009 | Cobalt |

| Connection | |
|---|---|
| 66” wide | |
| 100% antimony-free polyester | |
| 1FB1 | Oyster |
| 1FB2 | Linen |
| 1FB3 | Iceberg |
| 1FB4 | Silver Pine |
| 1FB5 | Apricot |
| 1FB6 | Cumin |
| 1FB7 | Green Apple |
| 1FB8 | Slate Blue |
| 1FB9 | Metal |

| Current | |
|---|---|
| 66” wide | |
| 100% antimony-free polyester | |
| 1FC1 | Oyster |
| 1FC2 | Linen |
| 1FC3 | Iceberg |
| 1FC4 | Silver Pine |
| 1FC5 | Apricot |
| 1FC6 | Cumin |
| 1FC7 | Green Apple |
| 1FC8 | Slate Blue |
| 1FC9 | Metal |

| Glaze | |
|---|---|
| 66” wide | |
| 100% recycled polyester | |
| 8Z01 | Wicker |
| 8Z02 | Honey |
| 8Z03 | Porcelain |
| 8Z04 | Celadon |
| 8Z06 | Rye |
| 8Z07 | Frost |
| 8Z08 | Silver Birch |

| Ground Cloth® | |
|---|---|
| 66” wide | |
| 100% polyester | |
| 4701 | Vapor Grey |
| 4721 | Warm White * |
| 4722 | Fog * |
| 4723 | Straw * |
| 4724 | Red Orange * |
| 4725 | Wild Berry * |
| 4726 | Green Apple * |
| 4727 | Caribbean * |
| 4728 | Midnight * |
| 4729 | Cappuccino * |

* Colors available on Exclave® Video-friendly Tackable Boards and Stowage Tackable Backdrop

| Kira 2 | |
|---|---|
| 54” wide | |
| 100% recycled polyester | |
| 5D11 | Flaxen |
| 5D12 | Papyrus |
| 5D13 | Oasis |
| 5D14 | Incense |
| 5D15 | Ash |
| 5D16 | Falcon |

| Pins and Needles | |
|---|---|
| 58” wide | |
| 76% recycled polyester | |
| 24% polyester | |
| 22R01 | Day and Night |
| 22R02 | Night and Day |

| Savannah | |
|---|---|
| 66” wide | |
| 76% recycled polyester | |
| 24% polypropylene | |
| 8L01 | Pearl |
| 8L02 | Oyster |
| 8L03 | Wheat |
| 8L04 | Jute |
| 8L05 | Bamboo |
| 8L06 | Metal |
| 8L07 | Linen |
| 8L08 | Celadon |
| 8L09 | Moss |
| 8L10 | Frost |
| 8L11 | Shale |
| 8L12 | Pewter |

*Price category 3 continued on next page*

**Price Category 3**
*continued*

| Strands | |
|---|---|
| 66” wide | |
| 100% recycled polyester | |
| 8W01 | Pebble |
| 8W02 | Porcelain |
| 8W03 | Taupe |
| 8W04 | Honey |
| 8W05 | Khaki |
| 8W06 | Rye |
| 8W07 | Wicker |
| 8W08 | Tin |
| 8W09 | Cool Grey |

| String Plaid | |
|---|---|
| 54” wide | |
| 100% recycled polyester | |
| 22V01 | Warm White on Khaki |
| 22V02 | Mint on Yellow Green |
| 22V03 | Mist on Blue Grey |
| 22V04 | Sky Blue on Red |
| 22V05 | Lime on Magenta |
| 22V06 | Bright Green on Green |
| 22V07 | Aqua Blue on Cerulean |
| 22V08 | Ivory on Black |

**Price Category 4**

| Glisten | |
|---|---|
| 66” wide | |
| 84% polyester | |
| 16% recycled polyester | |
| 2X02 | Rye |
| 2X05 | Iceberg |
| 2X09 | Pewter |
| 2X10 | Ash |

| Loft | |
|---|---|
| Assigned lead-time textile. A | |
| 54” wide | |
| 100% wool | |
| 22L01 | Heathered Light Green |
| 22L02 | Heathered Dark Green |
| 22L03 | Heathered Turquoise |
| 22L04 | Heathered Navy |
| 22L08 | Heathered Grey * |
| 22L09 | Heathered Blue * |
| 22L11 | Heathered Dark Grey |

* Colors available on Exclave®
Video-friendly Tackable
Boards and Stowage Tackable
Backdrop

| Quilty | |
|---|---|
| 56” wide | |
| 100% antimony-free polyester | |
| GreenShield | |
| 6S03 | Khaki |
| 6S04 | Straw |
| 6S07 | Brick |
| 6S10 | Mink |
| 6S11 | Green Apple |
| 6S13 | Indigo |
| 6S14 | Zinc |
| 6S15 | Slate |
| 6S16 | Beachwood |
| 6S17 | Paprika |
| 6S18 | Plum |
| 6S19 | Juniper |
| 6S20 | Grey Black |

**Price Category 5**

| Hopsak | |
|---|---|
| 56” wide | |
| 100% recycled polyester | |
| 14A20 | Black |
| 14A22 | Raw Umber Dark |
| 14A26 | Grey Blue Dark |
| 14A30 | Sepia Dark |
| 14A38 | Emerald Dark |
| 14A39 | Yellow Dark |
| 14A40 | Orange |
| 14A41 | Sienna |
| 14A42 | Olive Green Dark |
| 14A43 | Crimson |
| 14A44 | Crimson Dark Dark |
| 14A45 | Violet Dark |
| 14A46 | Pink Dark Dark |
| 14A47 | Ultramarine Dark |
| 14A48 | Cobalt Blue |
| 14A49 | Terra Cotta |
| 14A50 | Ochre Dark |

For more information about our products and services or to see a list of dealers, please visit us at HermanMiller.com or call (800) 851 1196.

© 2019 Herman Miller, Inc., Zeeland, Michigan

Distribution Rights

Working together since 1956, Herman Miller and Vitra are the authentic sources of designs by Charles and Ray Eames, Alexander Girard, and George Nelson. All the designs shown in this book are protected by law. Herman Miller has obtained all rights to make and sell these designs. Also, Herman Miller holds exclusive worldwide manufacturing and distribution rights for these products with the following exceptions:

Charles and Ray Eames, George Nelson, and Alexander Girard—Worldwide distribution rights for furniture in all areas except Europe and the Middle East. For those areas, please contact Vitra.

Isamu Noguchi—Worldwide distribution rights for the Noguchi Rudder Table. Distribution rights for the Noguchi Table in North America and Central America only. For all other areas, please contact Vitra.

Magis—Exclusive distribution rights in the US and Canada. For all other areas, please contact Magis.

Mattiazzi—Exclusive distribution rights in the US and Canada. For all other areas, please contact Mattiazzi.

® HermanMiller, ⓗ, 3D Intelligent, AO, Action Office, Aeron, ArcSpan, Aside, Avall, Avive, Bubble Lamps, Canvas Office Landscape, Caper, Celle, Co/Struc, Daisyone, Distil, Eames, Eco-Dematerialized, Embody, Envelop, Equa 2, Ergon 3, Ethospace, Exclave, Fine-Tune, FlexFront, Flo, Formcoat, Formwork, Ground Cloth, Herman Miller for the Home, Herman Miller for Healthcare, Intersect, Kinemat, Lapjack, Layout Studio, Lifework, Limerick, Live Unframed, Living Office, Locale, Maharam, Meridian, Mirra, Motia, Passage, Pellicle, Perspectives, Plex, PostureFit, Public Office Landscape, Resolve, Rodney, Sayl, Setu, Thrive, Tu, Wishbone, and Y-Tower are among the registered trademarks of Herman Miller, Inc., and its owned subsidiaries.

™ 8Z Pellicle, About Face, AireWeave, Albert, Backfit, Bubbletack, Burdick Group, Butterfly Back, Celeste, Cellular Suspension, Clam, Compass, Connect, Cosm, Cubert, DOT, Duracare, Durawrap, Eames Soft Pad, EnhancedAccess, Everywhere, Flex-Edge, Flute, Harmonic, Herman Miller Select, Hopsak 2, Intent, Iota, Jaw, Keyless Entry, Keyn Chair Group by Herman Miller, Latitude, Lino, Locale, Logic Mini, Logic Power Access Solutions, Live Platform, Loop, Lyris, Lyris 2, Made-to-Measure Storage, Metaform Portfolio, Mora, Multiscrim, Nelson, Nevi, Overlay, Pari, Pixelated Support, PostureFit SL, Prospect, Q, Renew, Sense, Soft Pad, Stackable, Stackable Storage, Striad, Swoop, Tone, TriFlex, Twist, Ubi, Verus, Vista and Wireframe are among the trademarks of Herman Miller, Inc., and its owned subsidiaries.

SM Herman Miller Options is among the service marks of Herman Miller, Inc.

AAP™ is a trademark of Extron Electronics.

Alexander Girard® is a registered trademark of The Alexander Girard Estate.

Chemsurf® is a registered trademark of Wilsonart International.

Corian® is a registered trademark of E. I. du Pont de Nemours and Company Corporation.

Crypton® is a registered trademark of Crypton, Inc.

DACRON® is a registered trademark of INVISTA S.a r.l.

Decora® is a registered trademark of Leviton Manufacturing Co., Inc.

Edelman® Leather is a registered trademark of Edelman Leather, Inc.

Extron® is a registered trademark of RGB Systems, Inc.

FENIX NTM® is a registered trademark of Arpa Industriale S.p.A.

FLEXNET™ is a trademark of Milliken & Company.

Floor Saver Glide® is a registered trademark of Carpin Manufacturing, Inc.

Geiger® is a registered trademark, and Bumper™, Saiba™, and Ward Bennett™ are trademarks, of Geiger International.

Goetz™ is a trademark of Mark W. Goetz.

Hang-It-All® is a registered trademark of Lucia Eames Demetrios, d.b.a. Eames Office.

Holophane® is a registered trademark of Holophane.

Ingeo™ is a trademark of Cargill Dow LLC.

iPad® is a registered trademark of Apple, Inc.

Leviton® is a registered trademark of Leviton Manufacturing Co., Inc.

LifeSize® is a registered trademark of LifeSize Communications, Inc.

Magis®, Bombo®, and Me Too® are registered trademarks of Magis S.p.A.

Microsoft® and Natural® Keyboard are registered trademarks of Microsoft Corporation.

Noguchi® and the Noguchi table configuration (trade dress) are registered trademarks, and Rudder Table™ is a trademark, of The Isamu Noguchi Foundation and Garden Museum.

Place Textiles® is a registered trademark of Place Textiles.

SuperSeat™ is a trademark of Dahti Seating, a division of ITW.