Prices effective September 3, 2019
Published October 2019

Geiger® Axon™ Tables

Introduction	**page 2**
Geiger® Axon™ Tables	**3**
Round Tables	5
Rectangular Tables	15
Video Conference Tables	36
Power	48
Conference Caddy	62
Indices	**63**
By Name	63
By Number	65
Appendices	
20-Day or Less/Assigned Lead-Time Order Information	

For the latest materials information, refer to the Materials pages on HermanMiller.com.

Introduction

A Note on the Organization of This Book

There are a few signals that will help you understand the organization of this book. Once you know them, you should be able to find your way around easily.

Like a newspaper, this book is formatted with columns of text and illustrations that run vertically.

Information wraps from one column to the next and continues for as many pages as it needs to.

Black bars are clues.

A black bar at the top of a page signals the start of information about a product.

This information is divided into two sections, each signaled by a black bar. Product Information includes a description, additional notes, and dimensional drawings. Specification Information, which always begins at the top of a column, includes a series of steps. Each step represents a decision you need to make in order to complete your product number. Steps must be followed sequentially. The number of pages needed to complete information on a product varies; some will be complete in one page; others may fill three or four pages. Just continue going through the steps until you run into the next product, signaled by the black bar at the top of the page.

Black tabs running along the outside edge of the page help you locate what section you are in or what section you want to go to. You can thumb forwards or backwards to find a section; tabs and text appear on both sides of the page.

The additional pages in the back of the book include the appendices and indices. They are signaled by a long black bar running along the outside edge of the page.

The index is presented two ways.

The first index is in alphabetical order by product name. It can be helpful if you are new to the products and numbering scheme or if you are looking for a type of product, such as work chair or round table.
The second index is by product number. It lists, in alphanumeric order, the base product number, typically a five-digit number.

General Information

This book is effective September 3, 2019, subject to change without notice. Products may be purchased from authorized Herman Miller dealers who will quote prices upon request. For more information about our products and services or to see a list of dealers, visit www.HermanMiller.com.

All prices are list prices. Additional services, such as planning services, design, storage, and installation, are not included and must be added to these prices when the additional services are requested.

Illustrations, specifications, and prices are based on the latest information at the time of publication. The right is reserved to make changes at any time without notice in prices, fabrics, finishes, materials, specifications, and models, and also to discontinue models and finishes.

Dimensions shown in the drawings are engineering drawing dimensions rounded up to the nearest 1/8". Product is shipped set up or knocked down. Products that include "Shipped knocked down" in the description require some assembly. If this statement does not appear in the description, the product is shipped assembled.

Service problems are normally handled by a Herman Miller authorized dealer. Where this cannot be accomplished on a local level, service problems should be referred to the Customer Care Representative for your region, Herman Miller, Inc., Zeeland, Michigan 49464.

20-Day or Less/Assigned Lead-Time Shipments

All products and options in this price book not designated by an Assigned Program icon A will ship in **20 business days or less** after being acknowledged by Herman Miller.

Products and options designated by an A are on the assigned lead-time program and may ship in 20 days, less than 20 days, or more than 20 days from order acknowledgement.

Axon round table, glass top KTCG-

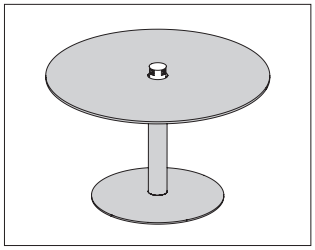

Product Information

Description

These round Axon™ tables come in 5 diameters and 4 heights. Glass tops are 1/2″-thick tempered low-iron back-painted glass with satin etched surface.

Notes

Table understructure finish matches specified base finish.

When specifying table with round power cutout (PCR) option, order round power module (KPR1) separately. Each module provides 3 simplex receptacles and 1 dual USB port.

All tables include 3 knockouts on underside at edge of table to accept edge USB power modules. Order edge USB power modules (KUSBx) separately.

Seating capacity of round tables:

36″ diameter—4
42″ diameter—4
48″ diameter—5
54″ diameter—6
60″ diameter—6

Dimensions

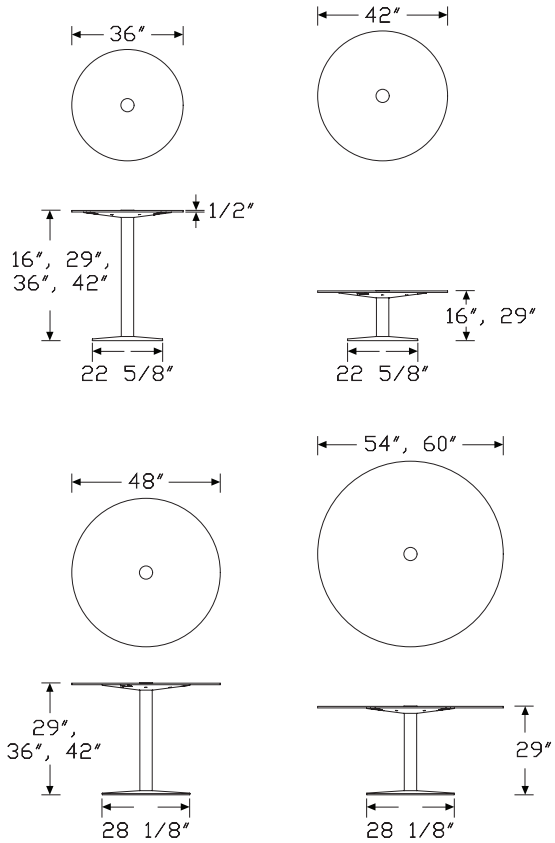

Specification Information

Step 1.

KTCG- A

Step 2. Diameter

36	36″ diameter	A
42	42″ diameter	A
48	48″ diameter	A
54	54″ diameter	A
60	60″ diameter	A

Step 3. Height

For 36″ diameter (36)

16	16″ high	A
29	29″ high	A
36	36″ high	A
42	42″ high	A

For 42″ diameter (42)

16	16″ high	A
29	29″ high	A

For 48″ diameter (48)

29	29″ high	A
36	36″ high	A
42	42″ high	A

For 54″ diameter (54) or 60″ diameter (60)

29	29″ high	A

Prices for Steps 1-3.

		16	29	36	42
KTCG-	**36**	$4005	4344	4493	4608
	42	$4566	4879	—	—
	48	—	$5942	6393	6822
	54	—	$7085	—	—
	60	—	$7915	—	—

Step 4. Top Finish

GKB	black back painted, satin etched	A	+$0
GKF	folkstone grey back painted, satin etched	A	+$0
GKN	warm grey neutral back painted, satin etched	A	+$0
GKW	white back painted, satin etched	A	+$0

Step 5. Base Finish

8Q	folkstone grey	A	+$0
91	white	A	+$0
BK	black	A	+$0

Step 6. Power Cutout

PCR	round power cutout	A	+$175
PCN	no power cutout	A	+$0

Step 7. Bezel Finish

For round power cutout (PCR)

91	white	A	+$0
BK	black	A	+$0
XT	titanium	A	+$0

Axon round table, laminate top KTCL-

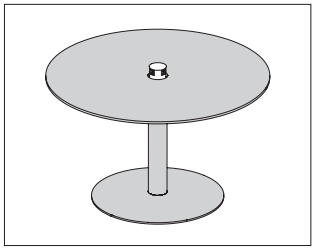

Product Information

Description

These round Axon™ tables come in 5 diameter sizes and 4 height options. Laminate tops are 5/8"-thick high-pressure laminate with matching eased edge banding.

Notes

Table understructure finish matches specified base finish.

When specifying table with round power cutout (PCR) option, order round power module (KPR1) separately. Each module provides 3 simplex receptacles and 1 dual USB port.

All tables include 3 knockouts on underside at edge of table to accept edge USB power modules. Order edge USB power modules (KUSBx) separately.

Seating capacity of round tables:

36" diameter—4
42" diameter—4
48" diameter—5
54" diameter—6
60" diameter—6

Dimensions

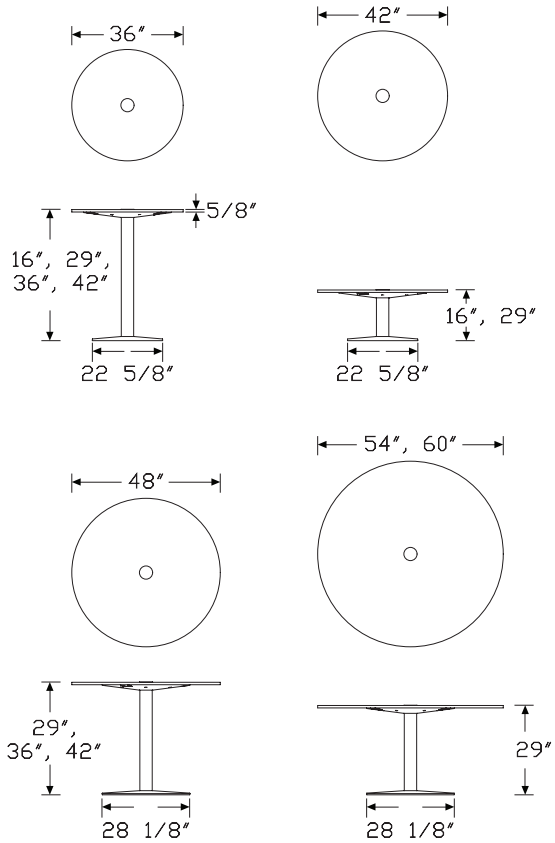

Axon round table, laminate top

continued

Specification Information

Step 1.

KTCL- A

Step 2. Diameter

36	36" diameter A
42	42" diameter A
48	48" diameter A
54	54" diameter A
60	60" diameter A

Step 3. Height

For 36" diameter (36)

16	16" high A
29	29" high A
36	36" high A
42	42" high A

For 42" diameter (42)

16	16" high A
29	29" high A

For 48" diameter (48)

29	29" high A
36	36" high A
42	42" high A

For 54" diameter (54) or 60" diameter (60)

29	29" high A

Prices for Steps 1-3.

		16	29	36	42
KTCL-	**36**	$2437	2643	2734	2815
	42	$2618	2797	—	—
	48	—	$3320	3641	3886
	54	—	$4138	—	—
	60	—	$4280	—	—

Step 4. Top Finish

		36	42	48	54	60
8Q	folkstone grey A	+$0	0	0	0	0
91	white A	+$0	0	0	0	0
98	studio white A	+$0	0	0	0	0
CL	cool grey neutral A	+$0	0	0	0	0
WL	sandstone A	+$0	0	0	0	0
WN	warm grey neutral A	+$0	0	0	0	0
X1	chalk white A	+$0	0	0	0	0
		36	**42**	**48**	**54**	**60**
LS1	soft touch brite white A	+$533	533	1000	1000	1000
LS2	soft touch neutral white A	+$533	533	1000	1000	1000
LS3	soft touch folkstone grey A	+$533	533	1000	1000	1000
LS4	soft touch fog A	+$533	533	1000	1000	1000
LS5	soft touch storm A	+$533	533	1000	1000	1000
LS6	soft touch black A	+$533	533	1000	1000	1000
LS7	soft touch earth A	+$533	533	1000	1000	1000

Step 5. Edge Type

KL1	eased edge on laminate top A	+$0

Step 6. Base Finish

8Q	folkstone grey A	+$0
91	white A	+$0
BK	black A	+$0

Step 7. Power Cutout

PCR	round power cutout A	+$44
PCN	no power cutout A	+$0

Step 8. Bezel Finish

For round power cutout (PCR)

91	white A	+$0
BK	black A	+$0
XT	titanium A	+$0

Axon round table, stone top KTCS-

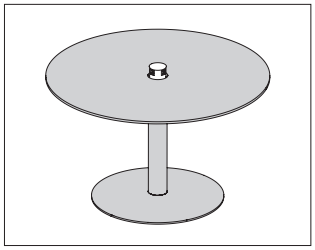

Product Information

Description

These round Axon™ tables come in 5 diameters and 4 heights. Stone tops are 13/16"-thick with eased edge.

Notes

Table understructure finish matches specified base finish.

When specifying table with round power cutout (PCR) option, order round power module (KPR1) separately. Each module provides 3 simplex receptacles and 1 dual USB port.

All tables include 3 knockouts on underside at edge of table to accept edge USB power modules. Order edge USB power modules (KUSBx) separately.

Seating capacity of round tables:

36" diameter—4
42" diameter—4
48" diameter—5
54" diameter—6
60" diameter—6

Dimensions

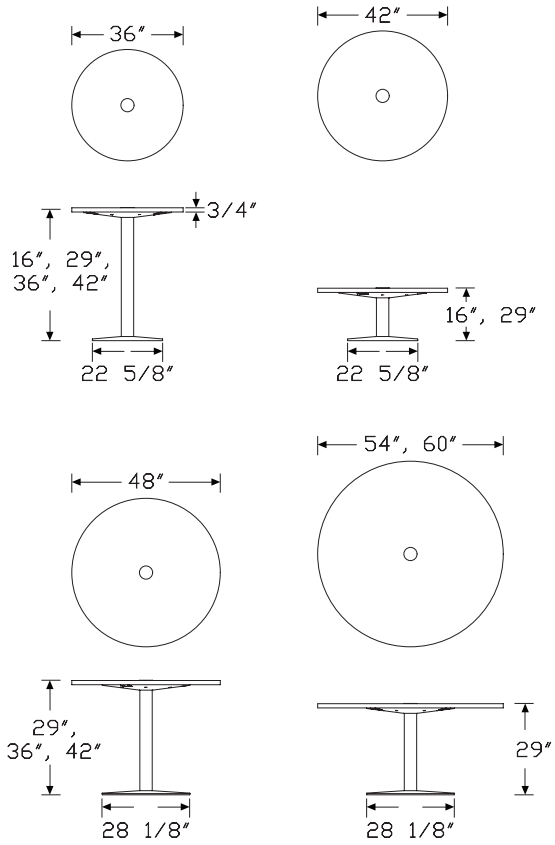

Axon round table, stone top

continued

Specification Information

Step 1.

KTCS- A

Step 2. Diameter

36	36" diameter A
42	42" diameter A
48	48" diameter A
54	54" diameter A
60	60" diameter A

Step 3. Height

For 36" diameter (36)

16	16" high A
29	29" high A
36	36" high A
42	42" high A

For 42" diameter (42)

16	16" high A
29	29" high A

For 48" diameter (48)

29	29" high A
36	36" high A
42	42" high A

For 54" diameter (54) or 60" diameter (60)

29	29" high A

Prices for Steps 1-3.

		16	29	36	42
KTCS-	**36**	$5092	5443	5599	5717
	42	$6359	6709	—	—
	48	—	$8731	9240	9747
	54	—	$10977	—	—
	60	—	$13091	—	—

Step 4. Top Finish

		36	42	48	54	60
5UH	georgia grey honed marble A	+$0	0	0	0	0
96H	white carrara honed marble A	+$0	0	0	0	0
QBE	Cambria® berwyn matte quartz A	+$2132	1820	1430	1004	526
QBK	Cambria® blackwood matte quartz A	+$2132	1820	1430	1004	526
QCA	Cambria® carrick matte quartz A	+$2132	1820	1430	1004	526
QCL	Cambria® clareanne matte quartz A	+$2132	1820	1430	1004	526

Step 5. Base Finish

8Q	folkstone grey A	+$0
91	white A	+$0
BK	black A	+$0

Step 6. Power Cutout

PCR	round power cutout A	+$219
PCN	no power cutout A	+$0

Step 7. Bezel Finish

For round power cutout (PCR)

91	white A	+$0
BK	black A	+$0
XT	titanium A	+$0

Axon round table, wood top KTCW-

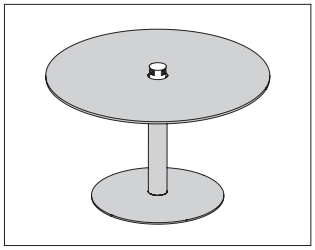

Product Information

Description

These round Axon™ tables come in 5 diameters and 4 heights. Wood tops are 5/8″-thick with veneer and matching eased edge banding.

Notes

Table understructure finish matches specified base finish.

When specifying table with round power cutout (PCR) option, order round power module (KPR1) separately. Each module provides 3 simplex receptacles and 1 dual USB port.

All tables include 3 knockouts on underside at edge of table to accept edge USB power modules. Order edge USB power modules (KUSBx) separately.

Seating capacity of round tables:

36″ diameter—4
42″ diameter—4
48″ diameter—5
54″ diameter—6
60″ diameter—6

Dimensions

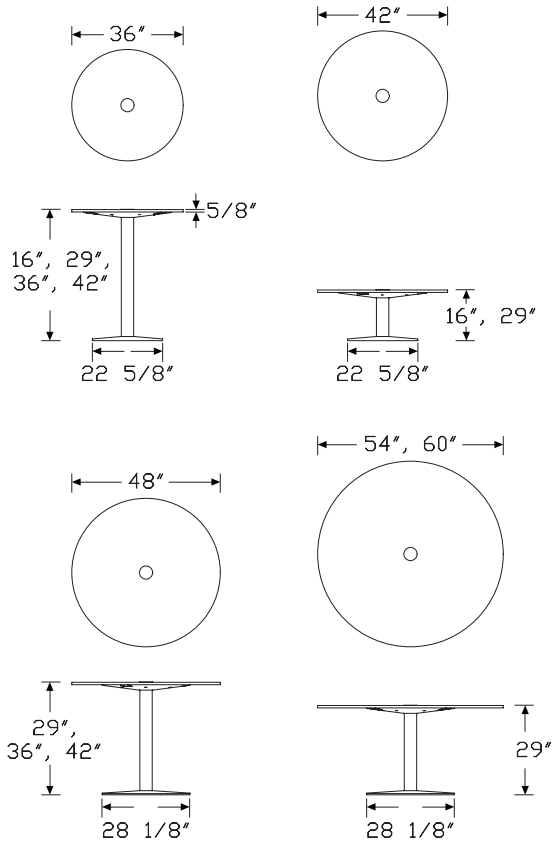

Axon round table, wood top

continued

Specification Information

Step 1.

KTCW- A

Step 2. Diameter

36	36″ diameter A
42	42″ diameter A
48	48″ diameter A
54	54″ diameter A
60	60″ diameter A

Step 3. Height

For 36″ diameter (36)

16	16″ high A
29	29″ high A
36	36″ high A
42	42″ high A

For 42″ diameter (42)

16	16″ high A
29	29″ high A

For 48″ diameter (48)

29	29″ high A
36	36″ high A
42	42″ high A

For 54″ diameter (54) or 60″ diameter (60)

29	29″ high A

Prices for Steps 1-3.

		16	29	36	42
KTCW-	**36**	$2336	2534	2621	2700
	42	$2503	2674	—	—
	48	—	$3264	3581	3589
	54	—	$3815	—	—
	60	—	$4074	—	—

Step 4. Top Finish

		36	42	48	54	60
911	champagne maple, flat cut, low sheen A	+$0	0	0	0	0
941	natural beech, flat cut, low sheen A	+$0	0	0	0	0
942	sundance cherry, flat cut, low sheen A	+$0	0	0	0	0
943	caramel cherry, flat cut, low sheen A	+$0	0	0	0	0
946	cocoa cherry, flat cut, low sheen A	+$0	0	0	0	0
956	cocoa sapele, quarter cut, low sheen A	+$0	0	0	0	0
962	toasted walnut, flat cut, low sheen A	+$0	0	0	0	0
963	charred walnut, flat cut, low sheen A	+$0	0	0	0	0
964	bronzed walnut, flat cut, low sheen A	+$0	0	0	0	0
965	smoked walnut, flat cut, low sheen A	+$0	0	0	0	0
966	coffee walnut, flat cut, low sheen A	+$0	0	0	0	0
977	chocolate ash, flat cut, low sheen A	+$0	0	0	0	0
978	natural oak, flat cut, low sheen A	+$0	0	0	0	0
981	champagne hickory, flat cut, low sheen A	+$0	0	0	0	0
991	champagne ash, flat cut, low sheen A	+$0	0	0	0	0
998	ebony ash, flat cut, low sheen A	+$0	0	0	0	0
9A1	white ash, quarter cut, low sheen A	+$0	0	0	0	0
9K1	rift oak, rift cut, low sheen A	+$0	0	0	0	0
9K6	burnt oak, rift cut, low sheen A	+$0	0	0	0	0
ED	aged cherry, flat cut, low sheen A	+$0	0	0	0	0
EK	medium red walnut, flat cut, low sheen A	+$0	0	0	0	0
G2U	light brown walnut, flat cut, low sheen A	+$0	0	0	0	0

Axon round table, wood top

continued

G40	dark brown walnut, flat cut, low sheen A	+$0	0	0	0	0
UX	walnut on cherry, flat cut, low sheen A	+$0	0	0	0	0

		36	42	48	54	60
GOU	natural walnut, flat cut, matte sheen A	+$0	0	0	0	0
662	toasted walnut, flat cut, matte sheen A	+$0	0	0	0	0
663	charred walnut, flat cut, matte sheen A	+$0	0	0	0	0
664	bronzed walnut, flat cut, matte sheen A	+$0	0	0	0	0
665	smoked walnut, flat cut, matte sheen A	+$0	0	0	0	0
666	coffee walnut, flat cut, matte sheen A	+$0	0	0	0	0
677	chocolate ash, flat cut, matte sheen A	+$0	0	0	0	0
678	natural oak, flat cut, matte sheen A	+$0	0	0	0	0
6A1	white ash, quarter cut, matte sheen A	+$0	0	0	0	0
6K1	rift oak, rift cut, matte sheen A	+$0	0	0	0	0
6K6	burnt oak, rift cut, matte sheen A	+$0	0	0	0	0

		36	42	48	54	60
66A	recograin frosty ash A	+$0	0	0	0	0
66G	recograin wenge A	+$0	0	0	0	0
68R	recograin rosewood, flat cut, matte sheen A	+$0	0	0	0	0
68W	recograin walnut, flat cut, matte sheen A	-$11	-11	-20	-20	-20
69A	recograin frosty ash, quarter cut, matte sheen A	+$0	0	0	0	0
69G	recograin wenge, quarter cut, matte sheen A	-$11	-11	-20	-20	-20
69K	recograin oak, quarter cut, matte sheen A	-$11	-11	-20	-20	-20
69R	recograin rosewood, quarter cut, matte sheen A	+$0	0	0	0	0
69T	recograin teak, quarter cut, matte sheen A	+$0	0	0	0	0
69W	recograin walnut, quarter cut, matte sheen A	-$11	-11	-20	-20	-20
ET	clear on ash, quarter cut, matte sheen A	+$0	0	0	0	0
EU	oak on ash, quarter cut, matte sheen A	+$0	0	0	0	0
EV	walnut on ash, quarter cut, matte sheen A	+$0	0	0	0	0

Axon round table, wood top

continued

		36	42	48	54	60
98R	recograin rosewood, flat cut, low sheen A	+$0	0	0	0	0
98W	recograin walnut, flat cut, low sheen A	-$11	-11	-20	-20	-20
99A	recograin frosty ash, quarter cut, low sheen A	+$0	0	0	0	0
99G	recograin wenge, quarter cut, low sheen A	-$11	-11	-20	-20	-20
99K	recograin oak, quarter cut, low sheen A	-$11	-11	-20	-20	-20
99R	recograin rosewood, quarter cut, low sheen A	+$0	0	0	0	0
99T	recograin teak, quarter cut, low sheen A	+$0	0	0	0	0
99W	recograin walnut, quarter cut, low sheen A	-$11	-11	-20	-20	-20

		36	42	48	54	60
967	smoked paldao, quarter cut, low sheen A	+$21	21	41	41	41
969	warm paldao, quarter cut, low sheen A	+$21	21	41	41	41

		36	42	48	54	60
667	smoked paldao, quarter cut, matte sheen A	+$21	21	41	41	41
669	warm paldao, quarter cut, matte sheen A	+$21	21	41	41	41

		36	42	48	54	60
951	natural anigre, quarter cut, low sheen A	+$169	169	324	324	324
968	figured sycamore, quarter cut, low sheen A	+$169	169	324	324	324
668	figured sycamore, quarter cut, matte sheen A	+$169	169	324	324	324

		36	42	48	54	60
ST0	stain-to-match, price group 0 A	+$0	0	0	0	0
ST1	stain-to-match, price group 1 A	+$21	21	41	41	41
ST2	stain-to-match, price group 2 A	+$42	42	81	81	81
ST3	stain-to-match, price group 3 A	+$85	85	162	162	162
ST4	stain-to-match, price group 4 A	+$127	127	243	243	243
ST5	stain-to-match, price group 5 A	+$169	169	324	324	324
ST6	stain-to-match, price group 6 A	+$254	254	486	486	486
ST7	stain-to-match, price group 7 A	+$380	380	729	729	729
ST8	stain-to-match, price group 8 A	-$11	-11	-20	-20	-20

Step 5. Edge Type		
KW1	eased edge on wood top A	+$0

Step 6. Base Finish		
8Q	folkstone grey A	+$0
91	white A	+$0
BK	black A	+$0

Step 7. Power Cutout		
PCR	round power cutout A	+$40
PCN	no power cutout A	+$0

Step 8. Bezel Finish *For round power cutout (PCR)*		
91	white A	+$0
BK	black A	+$0
XT	titanium A	+$0

Axon rectangular table, glass top KTRG-

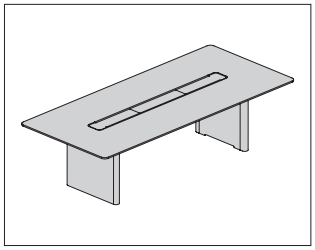

Product Information

Description

The rectangular Axon™ table comes in 3 depths and several widths ranging from 72″ wide to 240″ wide. Glass tops are 1/2″-thick tempered low-iron back-painted glass with satin etched surface.

Notes

Table understructure finish matches specified base finish.

Base type A is a pair of 2 3/4″ diameter × 26″ high metal post legs.

Base type B is 2 3/4″ deep × 28 1/4″ wide × 26″ high.

Base type C is 7 1/8″ deep × 28 1/4″ wide × 26″ high.

When specifying table with oval power cutout (1C1, 2C2, 3C2, 3C3, 4C3, 4C4) option, order oval power modules (KPV1, KPV2) separately. Each module provides 3 simplex receptacles and 1 dual USB port.

When specifying table with trough power lids (1L1, 2L2, 2L3, 4L3, 4L4, 6L4) option, table includes 6 5/8″ deep × 5 3/4″ high trough with removable metal cover between bidirectional flip-up metal power module lids. Includes trough bezel and lids. Order trough power modules (KPT1, KPT2) separately.

Table includes knockouts on underside at edge of table to accept edge USB power modules. Order edge USB power modules (KUSBx) separately.

Dimensions

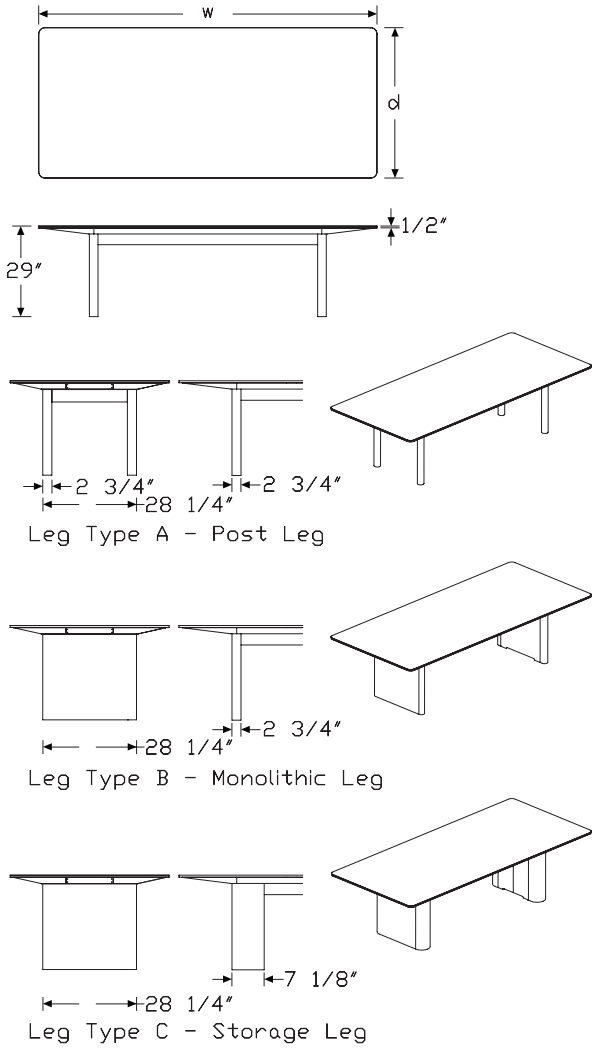

Axon rectangular table, glass top

continued

Specification Information

Step 1.

KTRG- A

Step 2. Depth

48	48" deep	A
54	54" deep	A
60	60" deep	A

Step 3. Width

For 48" deep (48)

72	72" wide	A
84	84" wide	A
96	96" wide	A
108	108" wide	A
120	120" wide	A

For 54" deep (54) or 60" deep (60)

120	120" wide	A
132	132" wide	A
144	144" wide	A
156	156" wide	A
168	168" wide	A
180	180" wide	A
192	192" wide	A
204	204" wide	A
216	216" wide	A
240	240" wide	A

Step 4. Height

29	29" high	A

Prices for Steps 1-4.

			29
KTRG-	**48**	**72**	$16877
		84	$17205
		96	$17538
		108	$18497
		120	$19375
	54	**120**	$23129
		132	$23582
		144	$24166
		156	$26095
		168	$27330
		180	$28584
		192	$29945
		204	$31496
		216	$32996
		240	$34571
	60	**120**	$23582
		132	$24044
		144	$24637
		156	$26599
		168	$27860
		180	$29140
		192	$30528
		204	$32108
		216	$33638
		240	$35246

Step 5. Top Finish

GKB	black back painted, satin etched A	+$0
GKF	folkstone grey back painted, satin etched A	+$0
GKN	warm grey neutral back painted, satin etched A	+$0
GKW	white back painted, satin etched A	+$0

Step 6. Base Type

For 72" wide (72), 84" wide (84), 96" wide (96), 108" wide (108), 120" wide (120), 132" wide (132), or 144" wide (144)

2BB	2 bases, types B-B A	+$1398
2CC	2 bases, types C-C A	+$2609

For 156" wide (156), 168" wide (168), 180" wide (180), 192" wide (192), 204" wide (204), 216" wide (216), or 240" wide (240)

3BCB	3 bases, types B-C-B A	+$1398
3CCC	3 bases, types C-C-C A	+$2609

Step 7. Base Finish

8Q	folkstone grey A	+$0
91	white A	+$0
BK	black A	+$0

Axon rectangular table, glass top

continued

Step 8. Power		
For 72" wide (72) or 84" wide (84)		
1C1	1-piece top, 1 oval power cutout A	+$154
1PN	1-piece top, no power cutouts or trough A	+$0
4L1	4-piece top, 1 trough power lid A	+$822
For 96" wide (96)		
2C2	2-piece top, 2 oval power cutouts A	+$307
2PN	2-piece top, no power cutouts or lids A	+$0
4L1	4-piece top, 1 trough power lid A	+$822
For 108" wide (108) or 120" wide (120)		
2C2	2-piece top, 2 oval power cutouts A	+$307
2PN	2-piece top, no power cutouts or lids A	+$0
4L2	4-piece top, 2 trough power lids A	+$1184
For 132" wide (132)		
3C2	3-piece top, 2 oval power cutouts A	+$439
3PN	3-piece top, no power cutouts or lids A	+$0
4L2	4-piece top, 2 trough power lids A	+$1184
For 144" wide (144) or 156" wide (156)		
3C3	3-piece top, 3 oval power cutouts A	+$439
3PN	3-piece top, no power cutouts or lids A	+$0
4L3	4-piece top, 3 trough power lids A	+$1546
For 168" wide (168) or 180" wide (180)		
3C3	3-piece top, 3 oval power cutouts A	+$439
3PN	3-piece top, no power cutouts or lids A	+$0
6L3	6-piece top, 3 trough power lids A	+$1546
For 192" wide (192)		
4C3	4-piece top, 3 oval power cutouts A	+$439
6L3	6-piece top, 3 trough power lids A	+$1546
3PN	3-piece top, no power cutouts or lids A	+$0
For 204" wide (204)		
4C3	4-piece top, 3 oval power cutouts A	+$439
4PN	4-piece top, no power cutouts or lids A	+$0
6L4	6-piece top, 4 trough power lids A	+$1908
For 216" wide (216) or 240" wide (240)		
4C4	4-piece top, 4 oval power cutouts A	+$439
4PN	4-piece top, no power cutouts or lids A	+$0
6L4	6-piece top, 4 trough power lids A	+$1908

Step 9. Trough Cover/Bezel Finish		
For 6-piece top, 3 trough power lids (6L3), 4-piece top, 1 trough power lid (4L1), 4-piece top, 2 trough power lids (4L2), 4-piece top, 3 trough power lids (4L3), or 6-piece top, 4 trough power lids (6L4)		
T99	white trough cover and bezel A	+$0
TBX	black trough cover, titanium bezel A	+$0
T9X	white trough cover, titanium bezel A	+$0
TBB	black trough cover and bezel A	+$0
TXX	titanium trough cover and bezel A	+$0

Axon rectangular table, laminate top KTRL-

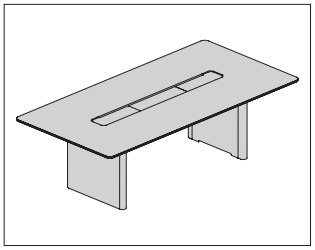

Product Information

Description

The rectangular Axon™ table comes in 3 depths and several widths ranging from 72″ wide to 240″ wide. Laminate tops are 5/8″-thick high-pressure laminate with matching eased edge banding.

Notes

Table understructure finish matches specified base finish.

Base type A is a pair of 2 3/4″ diameter × 26″ high metal post legs.

Base type B is 2 3/4″ deep × 28 1/4″ wide × 26″ high.

Base type C is 7 1/8″ deep × 28 1/4″ wide × 26″ high.

When specifying table with oval power cutout (1C1, 2C2, 2C3, 3C3, 4C4) option, order oval power modules (KPV1, KPV2) separately. Each module provides 3 simplex receptacles and 1 dual USB port.

When specifying table with trough power lids (1L1, 2L2, 2L3, 4L3, 4L4, 6L4) option, table includes 6 5/8″ deep × 5 3/4″ high trough with removable metal cover between bidirectional flip-up metal power module lids. Includes trough bezel and lids. Order trough power modules (KPT1, KPT2) separately.

Table includes knockouts on underside at edge of table to accept edge USB power modules. Order edge USB power modules (KUSBx) separately.

Dimensions

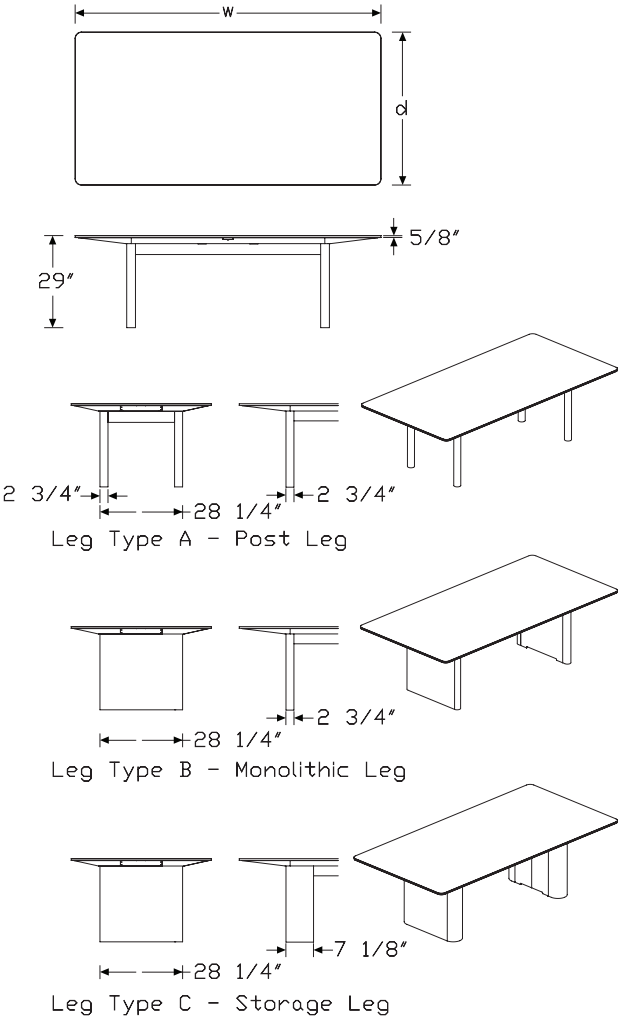

Axon rectangular table, laminate top *continued*

Specification Information

Step 1.

KTRL- A

Step 2. Depth

48	48" deep A
54	54" deep A
60	60" deep A

Step 3. Width

For 48" deep (48)

72	72" wide A
84	84" wide A
96	96" wide A
108	108" wide A
120	120" wide A

For 54" deep (54) or 60" deep (60)

120	120" wide A
132	132" wide A
144	144" wide A
156	156" wide A
168	168" wide A
180	180" wide A
192	192" wide A
204	204" wide A
216	216" wide A
240	240" wide A

Step 4. Height

29	29" high A

Prices for Steps 1-4.

			29
KTRL-	**48**	**72**	$11711
		84	$11934
		96	$12162
		108	$12506
		120	$12738
	54	**132**	$15995
		144	$16417
		156	$17785
		120	$15693
		168	$18610
		180	$19880
		192	$20811
		204	$21901
		216	$22927
		240	$24004
	60	**132**	$16304
		144	$16732
		156	$18121
		120	$15995
		168	$18964
		180	$21949
		192	$22977
		204	$24179
		216	$25313
		240	$26504

Step 5. Top Finish

For 72" wide (72) or 84" wide (84)

8Q	folkstone grey A	+$0
91	white A	+$0
98	studio white A	+$0
CL	cool grey neutral A	+$0
WL	sandstone A	+$0
WN	warm grey neutral A	+$0
X1	chalk white A	+$0

For 72" wide (72) or 84" wide (84)

LS1	soft touch brite white A	+$583
LS2	soft touch neutral white A	+$583
LS3	soft touch folkstone grey A	+$583
LS4	soft touch fog A	+$583
LS5	soft touch storm A	+$583
LS6	soft touch black A	+$583
LS7	soft touch earth A	+$583

Axon rectangular table, laminate top *continued*

For 96" wide (96) or 108" wide (108)

8Q	folkstone grey A	+$0
91	white A	+$0
98	studio white A	+$0
CL	cool grey neutral A	+$0
WL	sandstone A	+$0
WN	warm grey neutral A	+$0
X1	chalk white A	+$0

For 96" wide (96) or 108" wide (108)

LS1	soft touch brite white A	+$1094
LS2	soft touch neutral white A	+$1094
LS3	soft touch folkstone grey A	+$1094
LS4	soft touch fog A	+$1094
LS5	soft touch storm A	+$1094
LS6	soft touch black A	+$1094
LS7	soft touch earth A	+$1094

For 120" wide (120) or 132" wide (132)

8Q	folkstone grey A	+$0
91	white A	+$0
98	studio white A	+$0
CL	cool grey neutral A	+$0
WL	sandstone A	+$0
WN	warm grey neutral A	+$0
X1	chalk white A	+$0

For 120" wide (120) or 132" wide (132)

LS1	soft touch brite white A	+$1066
LS2	soft touch neutral white A	+$1066
LS3	soft touch folkstone grey A	+$1066
LS4	soft touch fog A	+$1066
LS5	soft touch storm A	+$1066
LS6	soft touch black A	+$1066
LS7	soft touch earth A	+$1066

For 144" wide (144) or 156" wide (156)

8Q	folkstone grey A	+$0
91	white A	+$0
98	studio white A	+$0
CL	cool grey neutral A	+$0
WL	sandstone A	+$0
WN	warm grey neutral A	+$0
X1	chalk white A	+$0

For 144" wide (144) or 156" wide (156)

LS1	soft touch brite white A	+$2045
LS2	soft touch neutral white A	+$2045
LS3	soft touch folkstone grey A	+$2045
LS4	soft touch fog A	+$2045
LS5	soft touch storm A	+$2045
LS6	soft touch black A	+$0
LS6	soft touch black A	+$2045
LS7	soft touch earth A	+$2045

For 168" wide (168) or 180" wide (180)

8Q	folkstone grey A	+$0
91	white A	+$0
98	studio white A	+$0
CL	cool grey neutral A	+$0
WL	sandstone A	+$0
WN	warm grey neutral A	+$0
X1	chalk white A	+$0

For 168" wide (168) or 180" wide (180)

LS1	soft touch brite white A	+$2071
LS2	soft touch neutral white A	+$2071
LS3	soft touch folkstone grey A	+$0
LS3	soft touch folkstone grey A	+$2071
LS4	soft touch fog A	+$2071
LS5	soft touch storm A	+$2071
LS6	soft touch black A	+$2071
LS7	soft touch earth A	+$2071

For 192" wide (192) or 204" wide (204)

8Q	folkstone grey A	+$0
91	white A	+$0
98	studio white A	+$0
CL	cool grey neutral A	+$0
WL	sandstone A	+$0
WN	warm grey neutral A	+$0
X1	chalk white A	+$0

For 192" wide (192) or 204" wide (204)

LS1	soft touch brite white A	+$2096
LS2	soft touch neutral white A	+$2096
LS3	soft touch folkstone grey A	+$2096
LS4	soft touch fog A	+$2096
LS5	soft touch storm A	+$0
LS5	soft touch storm A	+$2096
LS6	soft touch black A	+$2096
LS7	soft touch earth A	+$2096

Axon rectangular table, laminate top *continued*

For 216" wide (216) or 240" wide (240)

8Q	folkstone grey A	+$0
91	white A	+$0
98	studio white A	+$0
CL	cool grey neutral A	+$0
WL	sandstone A	+$0
WN	warm grey neutral A	+$0
X1	chalk white A	+$0

For 216" wide (216) or 240" wide (240)

LS1	soft touch brite white A	+$2134
LS2	soft touch neutral white A	+$0
LS2	soft touch neutral white A	+$2134
LS3	soft touch folkstone grey A	+$2134
LS4	soft touch fog A	+$2134
LS5	soft touch storm A	+$2134
LS6	soft touch black A	+$2134
LS7	soft touch earth A	+$2134

Step 6. Edge Type

KL1	eased edge on laminate top A	+$0

Step 7. Base Type

For 120" wide (120), 72" wide (72), 132" wide (132), 84" wide (84), 144" wide (144), 96" wide (96), or 108" wide (108)

2BB	2 bases, types B-B A	+$1398
2CC	2 bases, types C-C A	+$2609

For 156" wide (156), 168" wide (168), 180" wide (180), 192" wide (192), 204" wide (204), 216" wide (216), or 240" wide (240)

3BCB	3 bases, types B-C-B A	+$1398
3CCC	3 bases, types C-C-C A	+$2609

Step 8. Base Finish

8Q	folkstone grey A	+$0
91	white A	+$0
BK	black A	+$0

Step 9. Power

For 72" wide (72), 84" wide (84), or 96" wide (96)

1C1	1-piece top, 1 oval power cutout A	+$88
1PN	1-piece top, no power cutouts or trough A	+$0
2L1	2-piece top, 1 trough power lid A	+$641

For 120" wide (120) or 108" wide (108)

2C2	2-piece top, 2 oval power cutouts A	+$175
2L2	2-piece top, 2 trough power lids A	+$1013
2PN	2-piece top, no power cutouts or lids A	+$0

For 144" wide (144)

2C3	2-piece top, 3 oval power cutouts A	+$263
2L3	2-piece top, 3 trough power lids A	+$1375
2PN	2-piece top, no power cutouts or lids A	+$0

For 132" wide (132)

2C2	2-piece top, 2 oval power cutouts A	+$175
2L2	2-piece top, 2 trough power lids A	+$1013
2PN	2-piece top, no power cutouts or lids A	+$0

For 156" wide (156), 168" wide (168), 180" wide (180), or 192" wide (192)

3C3	3-piece top, 3 oval power cutouts A	+$263
3PN	3-piece top, no power cutouts or lids A	+$0
4L3	4-piece top, 3 trough power lids A	+$1375

For 204" wide (204) or 216" wide (216)

3C3	3-piece top, 3 oval power cutouts A	+$263
3PN	3-piece top, no power cutouts or lids A	+$0
4L4	4-piece top, 4 trough power lids A	+$1786

For 240" wide (240)

4C4	4-piece top, 4 oval power cutouts A	+$351
4PN	4-piece top, no power cutouts or lids A	+$0
6L4	6-piece top, 4 trough power lids A	+$1786

Step 10. Trough Cover/Bezel Finish

For 2-piece top, 2 trough power lids (2L2), 2-piece top, 3 trough power lids (2L3), 2-piece top, 1 trough power lid (2L1), 4-piece top, 3 trough power lids (4L3), 4-piece top, 4 trough power lids (4L4), or 6-piece top, 4 trough power lids (6L4)

T99	white trough cover and bezel A	+$0
TBX	black trough cover, titanium bezel A	+$0
T9X	white trough cover, titanium bezel A	+$0
TBB	black trough cover and bezel A	+$0
TXX	titanium trough cover and bezel A	+$0

Axon rectangular table, stone top KTRS-

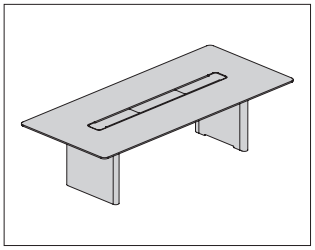

Product Information

Description

The rectangular Axon™ table comes in 3 depths and several widths ranging from 72″ wide to 240″ wide. Stone tops are $^{13}/_{16}$″-thick with eased edge.

Notes

Table understructure finish matches specified base finish.

Base type A is a pair of $2^{3}/_{4}$″ diameter × 26″ high metal post legs.

Base type B is $2^{3}/_{4}$″ deep × $28^{1}/_{4}$″ wide × 26″ high.

Base type C is $7^{1}/_{8}$″ deep × $28^{1}/_{4}$″ wide × 26″ high.

When specifying table with oval power cutout (1C1, 2C2, 3C2, 3C3, 4C3, 4C4) option, order oval power modules (KPV1, KPV2) separately. Each module provides 3 simplex receptacles and 1 dual USB port.

When specifying table with trough power lids (1L1, 2L2, 2L3, 4L3, 4L4, 6L4) option, table includes $6^{5}/_{8}$″ deep × $5^{3}/_{4}$″ high trough with removable metal cover between bidirectional flip-up metal power module lids. Includes trough bezel and lids. Order trough power modules (KPT1, KPT2) separately.

Table includes knockouts on underside at edge of table to accept edge USB power modules. Order edge USB power modules (KUSBx) separately.

Dimensions

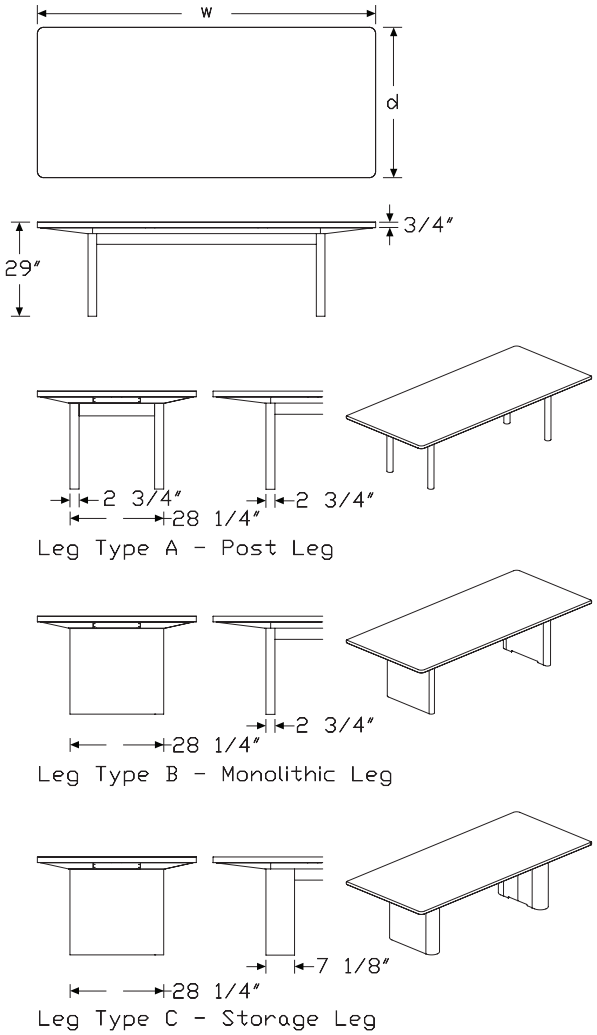

Axon rectangular table, stone top

continued

Specification Information

Step 1.

KTRS- A

Step 2. Depth

48	48" deep A
54	54" deep A
60	60" deep A

Step 3. Width

For 48" deep (48)

72	72" wide A
84	84" wide A
96	96" wide A
108	108" wide A
120	120" wide A

For 54" deep (54) or 60" deep (60)

120	120" wide A
132	132" wide A
144	144" wide A
156	156" wide A
168	168" wide A
180	180" wide A
192	192" wide A
204	204" wide A
216	216" wide A
240	240" wide A

Step 4. Height

29	29" high A

Prices for Steps 1-4.

			29
KTRS-	**48**	**72**	$25836
		84	$27678
		96	$29648
		108	$31551
		120	$32576
	54	**132**	$45043
		144	$47264
		156	$50315
		120	$43141
		168	$54002
		180	$56980
		192	$62195
		204	$63357
		216	$69294
		240	$72538
	60	**132**	$46874
		144	$49240
		156	$53137
		120	$45177
		168	$56189
		180	$59748
		192	$63533
		204	$66468
		216	$70183
		240	$76671

Step 5. Top Finish

		48120	**4872**	**48132**	**4884**	**48144**
5UH	georgia grey honed marble A	+$0	0	0	0	0
96H	white carrara honed marble A	+$0	0	0	0	0

		4896	**48108**	**48156**	**48168**	**48180**
5UH	georgia grey honed marble A	+$0	0	0	0	0
96H	white carrara honed marble A	+$0	0	0	0	0

		48192	**48204**	**48216**	**48240**	**54120**
5UH	georgia grey honed marble A	+$0	0	0	0	0
96H	white carrara honed marble A	+$0	0	0	0	0

		5472	**54132**	**5484**	**54144**	**5496**
5UH	georgia grey honed marble A	+$0	0	0	0	0
96H	white carrara honed marble A	+$0	0	0	0	0

Axon rectangular table, stone top

continued

		54108	54156	54168	54180	54192
5UH	georgia grey honed marble A	+$0	0	0	0	0
96H	white carrara honed marble A	+$0	0	0	0	0

		48120	4872	48132	4884	48144
QBE	Cambria® berwyn matte quartz A	+$3219	3232	2899	3706	3724
QBK	Cambria® blackwood matte quartz A	+$3219	3232	2899	3706	3724
QCA	Cambria® carrick matte quartz A	+$3219	3232	2899	3706	3724
QCL	Cambria® clareanne matte quartz A	+$3219	3232	2899	3706	3724

		4896	48108	48156	48168	48180
QBE	Cambria® berwyn matte quartz A	+$3215	1925	2737	1965	2118
QBK	Cambria® blackwood matte quartz A	+$3215	1925	2737	1965	2118
QCA	Cambria® carrick matte quartz A	+$3215	1925	2737	1965	2118
QCL	Cambria® clareanne matte quartz A	+$3215	1925	2737	1965	2118

		48192	48204	48216	48240	54120
QBE	Cambria® berwyn matte quartz A	+$2004	4566	4588	4868	5083
QBK	Cambria® blackwood matte quartz A	+$2004	4566	4588	4868	5083
QCA	Cambria® carrick matte quartz A	+$2004	4566	4588	4868	5083
QCL	Cambria® clareanne matte quartz A	+$2004	4566	4588	4868	5083

		5472	54132	5484	54144	5496
QBE	Cambria® berwyn matte quartz A	+$4206	2658	2412	0	2461
QBK	Cambria® blackwood matte quartz A	+$4206	2658	2412	2434	2461
QCA	Cambria® carrick matte quartz A	+$4206	2658	2412	2434	2461
QCL	Cambria® clareanne matte quartz A	+$4206	2658	2412	2434	2461

		54108	54156	54168	54180	54192
QBE	Cambria® berwyn matte quartz A	+$2478	4162	4623	5083	5127
QBK	Cambria® blackwood matte quartz A	+$2478	4162	4623	5083	5127
QCA	Cambria® carrick matte quartz A	+$2478	4162	4623	5083	5127
QCL	Cambria® clareanne matte quartz A	+$2478	4162	4623	5083	5127

Step 6. Base Type

For 120" wide (120), 72" wide (72), 132" wide (132), 84" wide (84), 144" wide (144), 96" wide (96), or 108" wide (108)

2BB	2 bases, types B-B A	+$1398
2CC	2 bases, types C-C A	+$2609

For 156" wide (156), 168" wide (168), 180" wide (180), 192" wide (192), 204" wide (204), 216" wide (216), or 240" wide (240)

3BCB	3 bases, types B-C-B A	+$1398
3CCC	3 bases, types C-C-C A	+$2609

Step 7. Base Finish

8Q	folkstone grey A	+$0
91	white A	+$0
BK	black A	+$0

Step 8. Power

For 72" wide (72) or 84" wide (84)

1C1	1-piece top, 1 oval power cutout A	+$219
1PN	1-piece top, no power cutouts or trough A	+$0
4L1	4-piece top, 1 trough power lid A	+$2237

For 96" wide (96)

2C2	2-piece top, 2 oval power cutouts A	+$658
2PN	2-piece top, no power cutouts or lids A	+$0
4L1	4-piece top, 1 trough power lid A	+$2237

For 120" wide (120) or 108" wide (108)

2C2	2-piece top, 2 oval power cutouts A	+$658
2PN	2-piece top, no power cutouts or lids A	+$0
4L2	4-piece top, 2 trough power lids A	+$2599

Axon rectangular table, stone top

continued

For 132" wide (132)		
3C2	3-piece top, 2 oval power cutouts A	+$439
3PN	3-piece top, no power cutouts or lids A	+$0
4L2	4-piece top, 2 trough power lids A	+$2599
For 144" wide (144) or 156" wide (156)		
3C3	3-piece top, 3 oval power cutouts A	+$1228
3PN	3-piece top, no power cutouts or lids A	+$0
4L3	4-piece top, 3 trough power lids A	+$2961
For 168" wide (168) or 180" wide (180)		
3C3	3-piece top, 3 oval power cutouts A	+$1228
3PN	3-piece top, no power cutouts or lids A	+$0
6L3	6-piece top, 3 trough power lids A	+$2961
For 192" wide (192)		
4C3	4-piece top, 3 oval power cutouts A	+$439
6L3	6-piece top, 3 trough power lids A	+$2961
3PN	3-piece top, no power cutouts or lids A	+$0
For 204" wide (204)		
4C3	4-piece top, 3 oval power cutouts A	+$439
4PN	4-piece top, no power cutouts or lids A	+$0
6L4	6-piece top, 4 trough power lids A	+$2961
For 216" wide (216) or 240" wide (240)		
4C4	4-piece top, 4 oval power cutouts A	+$1404
4PN	4-piece top, no power cutouts or lids A	+$0
6L4	6-piece top, 4 trough power lids A	+$2961

Step 9. Trough Cover/Bezel Finish

For 6-piece top, 3 trough power lids (6L3), 4-piece top, 1 trough power lid (4L1), 4-piece top, 2 trough power lids (4L2), 4-piece top, 3 trough power lids (4L3), or 6-piece top, 4 trough power lids (6L4)

T99	white trough cover and bezel A	+$0
TBX	black trough cover, titanium bezel A	+$0
T9X	white trough cover, titanium bezel A	+$0
TBB	black trough cover and bezel A	+$0
TXX	titanium trough cover and bezel A	+$0

Axon rectangular table, wood top KTRW-

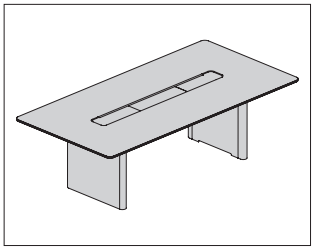

Product Information

Description

The rectangular Axon™ table comes in 3 depths and several widths ranging from 72″ wide to 240″ wide. Wood tops are 5/8″-thick with veneer and matching eased edge banding.

Notes

Table understructure finish matches specified base finish.

Base type A is a pair of 2 3/4″ diameter × 26″ high metal post legs.

Base type B is 2 3/4″ deep × 28 1/4″ wide × 26″ high.

Base type C is 7 1/8″ deep × 28 1/4″ wide × 26″ high.

When specifying table with oval power cutout (1C1, 2C2, 2C3, 3C3, 4C4) option, order oval power modules (KPV1, KPV2) separately. Each module provides 3 simplex receptacles and 1 dual USB port.

When specifying table with trough power lids (1L1, 2L2, 2L3, 4L3, 4L4, 6L4) option, table includes 6 5/8″ deep × 5 3/4″ high trough with removable metal cover between bidirectional flip-up metal power module lids. Includes trough bezel and lids. Order trough power modules (KPT1, KPT2) separately.

Table includes knockouts on underside at edge of table to accept edge USB power modules. Order edge USB power modules (KUSBx) separately.

Dimensions

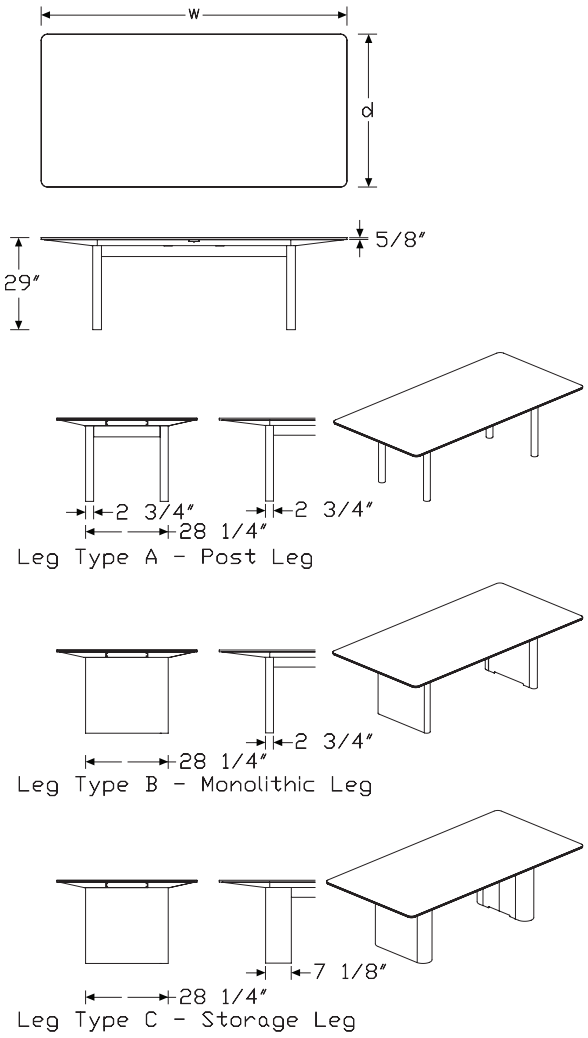

Axon rectangular table, wood top

continued

Specification Information

Step 1.

KTRW- A

Step 2. Depth

48	48" deep A
54	54" deep A
60	60" deep A

Step 3. Width

For 48" deep (48)

72	72" wide A
84	84" wide A
96	96" wide A
108	108" wide A
120	120" wide A

For 54" deep (54) or 60" deep (60)

120	120" wide A
132	132" wide A
144	144" wide A
156	156" wide A
168	168" wide A
180	180" wide A
192	192" wide A
204	204" wide A
216	216" wide A
240	240" wide A

Step 4. Height

29	29" high A

Prices for Steps 1-4.

			29
KTRW-	**48**	**72**	$12037
		84	$12266
		96	$12500
		108	$12851
		120	$13090
	54	**132**	$15381
		144	$15789
		156	$17113
		120	$15091
		168	$17905
		180	$18509
		192	$19372
		204	$20389
		216	$21340
		240	$22337
	60	**132**	$15677
		144	$16092
		156	$17436
		120	$15381
		168	$18245
		180	$20433
		192	$21385
		204	$22508
		216	$23559
		240	$24662

Step 5. Top Finish

For 72" wide (72) or 84" wide (84)

68R	recograin rosewood, flat cut, matte sheen A	+$0
68W	recograin walnut, flat cut, matte sheen A	-$29
69A	recograin frosty ash, quarter cut, matte sheen A	+$0
69G	recograin wenge, quarter cut, matte sheen A	-$29
69K	recograin oak, quarter cut, matte sheen A	-$29
69R	recograin rosewood, quarter cut, matte sheen A	+$0
69T	recograin teak, quarter cut, matte sheen A	+$0
69W	recograin walnut, quarter cut, matte sheen A	-$29
ET	clear on ash, quarter cut, matte sheen A	+$0
EU	oak on ash, quarter cut, matte sheen A	+$0
EV	walnut on ash, quarter cut, matte sheen A	+$0

For 72" wide (72) or 84" wide (84)

98R	recograin rosewood, flat cut, low sheen A	+$0
98W	recograin walnut, flat cut, low sheen A	-$29
99A	recograin frosty ash, quarter cut, low sheen A	+$0
99G	recograin wenge, quarter cut, low sheen A	-$29
99K	recograin oak, quarter cut, low sheen A	-$29
99R	recograin rosewood, quarter cut, low sheen A	+$0
99T	recograin teak, quarter cut, low sheen A	+$0
99W	recograin walnut, quarter cut, low sheen A	-$29

Axon rectangular table, wood top

continued

For 72" wide (72) or 84" wide (84)

911	champagne maple, flat cut, low sheen A	+$0
941	natural beech, flat cut, low sheen A	+$0
942	sundance cherry, flat cut, low sheen A	+$0
943	caramel cherry, flat cut, low sheen A	+$0
946	cocoa cherry, flat cut, low sheen A	+$0
956	cocoa sapele, quarter cut, low sheen A	+$0
962	toasted walnut, flat cut, low sheen A	+$0
963	charred walnut, flat cut, low sheen A	+$0
964	bronzed walnut, flat cut, low sheen A	+$0
965	smoked walnut, flat cut, low sheen A	+$0
966	coffee walnut, flat cut, low sheen A	+$0
977	chocolate ash, flat cut, low sheen A	+$0
978	natural oak, flat cut, low sheen A	+$0
981	champagne hickory, flat cut, low sheen A	+$0
991	champagne ash, flat cut, low sheen A	+$0
998	ebony ash, flat cut, low sheen A	+$0
9A1	white ash, quarter cut, low sheen A	+$0
9K1	rift oak, rift cut, low sheen A	+$0
9K6	burnt oak, rift cut, low sheen A	+$0
ED	aged cherry, flat cut, low sheen A	+$0
EK	medium red walnut, flat cut, low sheen A	+$0
G2U	light brown walnut, flat cut, low sheen A	+$0
G40	dark brown walnut, flat cut, low sheen A	+$0
UX	walnut on cherry, flat cut, low sheen A	+$0

For 72" wide (72) or 84" wide (84)

662	toasted walnut, flat cut, matte sheen A	+$0
663	charred walnut, flat cut, matte sheen A	+$0
664	bronzed walnut, flat cut, matte sheen A	+$0
665	smoked walnut, flat cut, matte sheen A	+$0
666	coffee walnut, flat cut, matte sheen A	+$0
677	chocolate ash, flat cut, matte sheen A	+$0
678	natural oak, flat cut, matte sheen A	+$0
6A1	white ash, quarter cut, matte sheen A	+$0
6K1	rift oak, rift cut, matte sheen A	+$0
6K6	burnt oak, rift cut, matte sheen A	+$0
GOU	natural walnut, flat cut, matte sheen A	+$0

For 72" wide (72) or 84" wide (84)

967	smoked paldao, quarter cut, low sheen A	+$117
969	warm paldao, quarter cut, low sheen A	+$117

For 72" wide (72) or 84" wide (84)

667	smoked paldao, quarter cut, matte sheen A	+$117
669	warm paldao, quarter cut, matte sheen A	+$117

For 72" wide (72) or 84" wide (84)

951	natural anigre, quarter cut, low sheen A	+$468
968	figured sycamore, quarter cut, low sheen A	+$468

For 72" wide (72) or 84" wide (84)

668	figured sycamore, quarter cut, matte sheen A	+$468

For 72" wide (72) or 84" wide (84)

ST0	stain-to-match, price group 0 A	+$0
ST1	stain-to-match, price group 1 A	+$59
ST2	stain-to-match, price group 2 A	+$117
ST3	stain-to-match, price group 3 A	+$234
ST4	stain-to-match, price group 4 A	+$351
ST5	stain-to-match, price group 5 A	+$468
ST6	stain-to-match, price group 6 A	+$702
ST7	stain-to-match, price group 7 A	+$1053
ST8	stain-to-match, price group 8 A	-$29

For 96" wide (96) or 108" wide (108)

68R	recograin rosewood, flat cut, matte sheen A	+$0
68W	recograin walnut, flat cut, matte sheen A	-$38
69A	recograin frosty ash, quarter cut, matte sheen A	+$0
69G	recograin wenge, quarter cut, matte sheen A	-$38
69K	recograin oak, quarter cut, matte sheen A	-$38
69R	recograin rosewood, quarter cut, matte sheen A	+$0
69T	recograin teak, quarter cut, matte sheen A	+$0
69W	recograin walnut, quarter cut, matte sheen A	-$38
ET	clear on ash, quarter cut, matte sheen A	+$0
EU	oak on ash, quarter cut, matte sheen A	+$0
EV	walnut on ash, quarter cut, matte sheen A	+$0

For 96" wide (96) or 108" wide (108)

98R	recograin rosewood, flat cut, low sheen A	+$0
98W	recograin walnut, flat cut, low sheen A	-$38
99A	recograin frosty ash, quarter cut, low sheen A	+$0
99G	recograin wenge, quarter cut, low sheen A	-$38
99K	recograin oak, quarter cut, low sheen A	-$38
99R	recograin rosewood, quarter cut, low sheen A	+$0
99T	recograin teak, quarter cut, low sheen A	+$0
99W	recograin walnut, quarter cut, low sheen A	-$38

Axon rectangular table, wood top

continued

For 96" wide (96) or 108" wide (108)

911	champagne maple, flat cut, low sheen A	+$0
941	natural beech, flat cut, low sheen A	+$0
942	sundance cherry, flat cut, low sheen A	+$0
943	caramel cherry, flat cut, low sheen A	+$0
946	cocoa cherry, flat cut, low sheen A	+$0
956	cocoa sapele, quarter cut, low sheen A	+$0
962	toasted walnut, flat cut, low sheen A	+$0
963	charred walnut, flat cut, low sheen A	+$0
964	bronzed walnut, flat cut, low sheen A	+$0
965	smoked walnut, flat cut, low sheen A	+$0
966	coffee walnut, flat cut, low sheen A	+$0
977	chocolate ash, flat cut, low sheen A	+$0
978	natural oak, flat cut, low sheen A	+$0
981	champagne hickory, flat cut, low sheen A	+$0
991	champagne ash, flat cut, low sheen A	+$0
998	ebony ash, flat cut, low sheen A	+$0
9A1	white ash, quarter cut, low sheen A	+$0
9K1	rift oak, rift cut, low sheen A	+$0
9K6	burnt oak, rift cut, low sheen A	+$0
ED	aged cherry, flat cut, low sheen A	+$0
EK	medium red walnut, flat cut, low sheen A	+$0
G2U	light brown walnut, flat cut, low sheen A	+$0
G40	dark brown walnut, flat cut, low sheen A	+$0
UX	walnut on cherry, flat cut, low sheen A	+$0

For 96" wide (96) or 108" wide (108)

662	toasted walnut, flat cut, matte sheen A	+$0
663	charred walnut, flat cut, matte sheen A	+$0
664	bronzed walnut, flat cut, matte sheen A	+$0
665	smoked walnut, flat cut, matte sheen A	+$0
666	coffee walnut, flat cut, matte sheen A	+$0
677	chocolate ash, flat cut, matte sheen A	+$0
678	natural oak, flat cut, matte sheen A	+$0
6A1	white ash, quarter cut, matte sheen A	+$0
6K1	rift oak, rift cut, matte sheen A	+$0
6K6	burnt oak, rift cut, matte sheen A	+$0
GOU	natural walnut, flat cut, matte sheen A	+$0

For 96" wide (96) or 108" wide (108)

967	smoked paldao, quarter cut, low sheen A	+$153
969	warm paldao, quarter cut, low sheen A	+$153

For 96" wide (96) or 108" wide (108)

667	smoked paldao, quarter cut, matte sheen A	+$153
669	warm paldao, quarter cut, matte sheen A	+$153

For 96" wide (96) or 108" wide (108)

951	natural anigre, quarter cut, low sheen A	+$612
968	figured sycamore, quarter cut, low sheen A	+$612

For 96" wide (96) or 108" wide (108)

668	figured sycamore, quarter cut, matte sheen A	+$612

For 96" wide (96) or 108" wide (108)

ST0	stain-to-match, price group 0 A	+$0
ST1	stain-to-match, price group 1 A	+$77
ST2	stain-to-match, price group 2 A	+$153
ST3	stain-to-match, price group 3 A	+$306
ST4	stain-to-match, price group 4 A	+$459
ST5	stain-to-match, price group 5 A	+$612
ST6	stain-to-match, price group 6 A	+$918
ST7	stain-to-match, price group 7 A	+$1377
ST8	stain-to-match, price group 8 A	-$38

For 120" wide (120) or 132" wide (132)

68R	recograin rosewood, flat cut, matte sheen A	+$0
68W	recograin walnut, flat cut, matte sheen A	-$47
69A	recograin frosty ash, quarter cut, matte sheen A	+$0
69G	recograin wenge, quarter cut, matte sheen A	-$47
69K	recograin oak, quarter cut, matte sheen A	-$47
69R	recograin rosewood, quarter cut, matte sheen A	+$0
69T	recograin teak, quarter cut, matte sheen A	+$0
69W	recograin walnut, quarter cut, matte sheen A	-$47
ET	clear on ash, quarter cut, matte sheen A	+$0
EU	oak on ash, quarter cut, matte sheen A	+$0
EV	walnut on ash, quarter cut, matte sheen A	+$0

For 120" wide (120) or 132" wide (132)

98R	recograin rosewood, flat cut, low sheen A	+$0
98W	recograin walnut, flat cut, low sheen A	-$47
99A	recograin frosty ash, quarter cut, low sheen A	+$0
99G	recograin wenge, quarter cut, low sheen A	-$47
99K	recograin oak, quarter cut, low sheen A	-$47
99R	recograin rosewood, quarter cut, low sheen A	+$0
99T	recograin teak, quarter cut, low sheen A	+$0
99W	recograin walnut, quarter cut, low sheen A	-$47

Axon rectangular table, wood top

continued

For 120" wide (120) or 132" wide (132)

911	champagne maple, flat cut, low sheen A	+$0
941	natural beech, flat cut, low sheen A	+$0
942	sundance cherry, flat cut, low sheen A	+$0
943	caramel cherry, flat cut, low sheen A	+$0
946	cocoa cherry, flat cut, low sheen A	+$0
956	cocoa sapele, quarter cut, low sheen A	+$0
962	toasted walnut, flat cut, low sheen A	+$0
963	charred walnut, flat cut, low sheen A	+$0
964	bronzed walnut, flat cut, low sheen A	+$0
965	smoked walnut, flat cut, low sheen A	+$0
966	coffee walnut, flat cut, low sheen A	+$0
977	chocolate ash, flat cut, low sheen A	+$0
978	natural oak, flat cut, low sheen A	+$0
981	champagne hickory, flat cut, low sheen A	+$0
991	champagne ash, flat cut, low sheen A	+$0
998	ebony ash, flat cut, low sheen A	+$0
9A1	white ash, quarter cut, low sheen A	+$0
9K1	rift oak, rift cut, low sheen A	+$0
9K6	burnt oak, rift cut, low sheen A	+$0
ED	aged cherry, flat cut, low sheen A	+$0
EK	medium red walnut, flat cut, low sheen A	+$0
G2U	light brown walnut, flat cut, low sheen A	+$0
G40	dark brown walnut, flat cut, low sheen A	+$0
UX	walnut on cherry, flat cut, low sheen A	+$0

For 120" wide (120) or 132" wide (132)

GOU	natural walnut, flat cut, matte sheen A	+$0
662	toasted walnut, flat cut, matte sheen A	+$0
663	charred walnut, flat cut, matte sheen A	+$0
664	bronzed walnut, flat cut, matte sheen A	+$0
665	smoked walnut, flat cut, matte sheen A	+$0
666	coffee walnut, flat cut, matte sheen A	+$0
677	chocolate ash, flat cut, matte sheen A	+$0
678	natural oak, flat cut, matte sheen A	+$0
6A1	white ash, quarter cut, matte sheen A	+$0
6K1	rift oak, rift cut, matte sheen A	+$0
6K6	burnt oak, rift cut, matte sheen A	+$0

For 120" wide (120) or 132" wide (132)

967	smoked paldao, quarter cut, low sheen A	+$189
969	warm paldao, quarter cut, low sheen A	+$189

For 120" wide (120) or 132" wide (132)

667	smoked paldao, quarter cut, matte sheen A	+$189
669	warm paldao, quarter cut, matte sheen A	+$189

For 120" wide (120) or 132" wide (132)

951	natural anigre, quarter cut, low sheen A	+$756
968	figured sycamore, quarter cut, low sheen A	+$756

For 120" wide (120) or 132" wide (132)

668	figured sycamore, quarter cut, matte sheen A	+$756

For 120" wide (120) or 132" wide (132)

ST0	stain-to-match, price group 0 A	+$0
ST1	stain-to-match, price group 1 A	+$95
ST2	stain-to-match, price group 2 A	+$189
ST3	stain-to-match, price group 3 A	+$378
ST4	stain-to-match, price group 4 A	+$567
ST5	stain-to-match, price group 5 A	+$756
ST6	stain-to-match, price group 6 A	+$1134
ST7	stain-to-match, price group 7 A	+$1701
ST8	stain-to-match, price group 8 A	-$47

For 144" wide (144) or 156" wide (156)

68R	recograin rosewood, flat cut, matte sheen A	+$0
68W	recograin walnut, flat cut, matte sheen A	-$56
69A	recograin frosty ash, quarter cut, matte sheen A	+$0
69G	recograin wenge, quarter cut, matte sheen A	-$56
69K	recograin oak, quarter cut, matte sheen A	-$56
69R	recograin rosewood, quarter cut, matte sheen A	+$0
69T	recograin teak, quarter cut, matte sheen A	+$0
69W	recograin walnut, quarter cut, matte sheen A	-$56
ET	clear on ash, quarter cut, matte sheen A	+$0
EU	oak on ash, quarter cut, matte sheen A	+$0
EV	walnut on ash, quarter cut, matte sheen A	+$0

For 144" wide (144) or 156" wide (156)

98R	recograin rosewood, flat cut, low sheen A	+$0
98W	recograin walnut, flat cut, low sheen A	-$56
99A	recograin frosty ash, quarter cut, low sheen A	+$0
99G	recograin wenge, quarter cut, low sheen A	-$56
99K	recograin oak, quarter cut, low sheen A	-$56
99R	recograin rosewood, quarter cut, low sheen A	+$0
99T	recograin teak, quarter cut, low sheen A	+$0
99W	recograin walnut, quarter cut, low sheen A	-$56

Axon rectangular table, wood top

continued

For 144" wide (144) or 156" wide (156)

911	champagne maple, flat cut, low sheen A	+$0
941	natural beech, flat cut, low sheen A	+$0
942	sundance cherry, flat cut, low sheen A	+$0
943	caramel cherry, flat cut, low sheen A	+$0
946	cocoa cherry, flat cut, low sheen A	+$0
956	cocoa sapele, quarter cut, low sheen A	+$0
962	toasted walnut, flat cut, low sheen A	+$0
963	charred walnut, flat cut, low sheen A	+$0
964	bronzed walnut, flat cut, low sheen A	+$0
965	smoked walnut, flat cut, low sheen A	+$0
966	coffee walnut, flat cut, low sheen A	+$0
977	chocolate ash, flat cut, low sheen A	+$0
978	natural oak, flat cut, low sheen A	+$0
981	champagne hickory, flat cut, low sheen A	+$0
991	champagne ash, flat cut, low sheen A	+$0
998	ebony ash, flat cut, low sheen A	+$0
9A1	white ash, quarter cut, low sheen A	+$0
9K1	rift oak, rift cut, low sheen A	+$0
9K6	burnt oak, rift cut, low sheen A	+$0
ED	aged cherry, flat cut, low sheen A	+$0
EK	medium red walnut, flat cut, low sheen A	+$0
G2U	light brown walnut, flat cut, low sheen A	+$0
G40	dark brown walnut, flat cut, low sheen A	+$0
UX	walnut on cherry, flat cut, low sheen A	+$0

For 144" wide (144) or 156" wide (156)

662	toasted walnut, flat cut, matte sheen A	+$0
663	charred walnut, flat cut, matte sheen A	+$0
664	bronzed walnut, flat cut, matte sheen A	+$0
665	smoked walnut, flat cut, matte sheen A	+$0
666	coffee walnut, flat cut, matte sheen A	+$0
677	chocolate ash, flat cut, matte sheen A	+$0
678	natural oak, flat cut, matte sheen A	+$0
6A1	white ash, quarter cut, matte sheen A	+$0
6K1	rift oak, rift cut, matte sheen A	+$0
6K6	burnt oak, rift cut, matte sheen A	+$0
GOU	natural walnut, flat cut, matte sheen A	+$0

For 144" wide (144) or 156" wide (156)

967	smoked paldao, quarter cut, low sheen A	+$225
969	warm paldao, quarter cut, low sheen A	+$225

For 144" wide (144) or 156" wide (156)

667	smoked paldao, quarter cut, matte sheen A	+$225
669	warm paldao, quarter cut, matte sheen A	+$225

For 144" wide (144) or 156" wide (156)

951	natural anigre, quarter cut, low sheen A	+$900
968	figured sycamore, quarter cut, low sheen A	+$900

For 144" wide (144) or 156" wide (156)

668	figured sycamore, quarter cut, matte sheen A	+$900

For 144" wide (144) or 156" wide (156)

ST0	stain-to-match, price group 0 A	+$0
ST1	stain-to-match, price group 1 A	+$113
ST2	stain-to-match, price group 2 A	+$225
ST3	stain-to-match, price group 3 A	+$450
ST4	stain-to-match, price group 4 A	+$675
ST5	stain-to-match, price group 5 A	+$900
ST6	stain-to-match, price group 6 A	+$1350
ST7	stain-to-match, price group 7 A	+$2025
ST8	stain-to-match, price group 8 A	-$56

For 168" wide (168) or 180" wide (180)

68R	recograin rosewood, flat cut, matte sheen A	+$0
68W	recograin walnut, flat cut, matte sheen A	-$65
69A	recograin frosty ash, quarter cut, matte sheen A	+$0
69G	recograin wenge, quarter cut, matte sheen A	-$65
69K	recograin oak, quarter cut, matte sheen A	-$65
69R	recograin rosewood, quarter cut, matte sheen A	+$0
69T	recograin teak, quarter cut, matte sheen A	+$0
69W	recograin walnut, quarter cut, matte sheen A	-$65
ET	clear on ash, quarter cut, matte sheen A	+$0
EU	oak on ash, quarter cut, matte sheen A	+$0
EV	walnut on ash, quarter cut, matte sheen A	+$0

For 168" wide (168) or 180" wide (180)

98R	recograin rosewood, flat cut, low sheen A	+$0
98W	recograin walnut, flat cut, low sheen A	-$65
99A	recograin frosty ash, quarter cut, low sheen A	+$0
99G	recograin wenge, quarter cut, low sheen A	-$65
99K	recograin oak, quarter cut, low sheen A	-$65
99R	recograin rosewood, quarter cut, low sheen A	+$0
99T	recograin teak, quarter cut, low sheen A	+$0
99W	recograin walnut, quarter cut, low sheen A	-$65

Axon rectangular table, wood top

continued

For 168" wide (168) or 180" wide (180)

911	champagne maple, flat cut, low sheen A	+$0
941	natural beech, flat cut, low sheen A	+$0
942	sundance cherry, flat cut, low sheen A	+$0
943	caramel cherry, flat cut, low sheen A	+$0
946	cocoa cherry, flat cut, low sheen A	+$0
956	cocoa sapele, quarter cut, low sheen A	+$0
962	toasted walnut, flat cut, low sheen A	+$0
963	charred walnut, flat cut, low sheen A	+$0
964	bronzed walnut, flat cut, low sheen A	+$0
965	smoked walnut, flat cut, low sheen A	+$0
966	coffee walnut, flat cut, low sheen A	+$0
977	chocolate ash, flat cut, low sheen A	+$0
978	natural oak, flat cut, low sheen A	+$0
981	champagne hickory, flat cut, low sheen A	+$0
991	champagne ash, flat cut, low sheen A	+$0
998	ebony ash, flat cut, low sheen A	+$0
9A1	white ash, quarter cut, low sheen A	+$0
9K1	rift oak, rift cut, low sheen A	+$0
9K6	burnt oak, rift cut, low sheen A	+$0
ED	aged cherry, flat cut, low sheen A	+$0
EK	medium red walnut, flat cut, low sheen A	+$0
G2U	light brown walnut, flat cut, low sheen A	+$0
G40	dark brown walnut, flat cut, low sheen A	+$0
UX	walnut on cherry, flat cut, low sheen A	+$0

For 168" wide (168) or 180" wide (180)

662	toasted walnut, flat cut, matte sheen A	+$0
663	charred walnut, flat cut, matte sheen A	+$0
664	bronzed walnut, flat cut, matte sheen A	+$0
665	smoked walnut, flat cut, matte sheen A	+$0
666	coffee walnut, flat cut, matte sheen A	+$0
677	chocolate ash, flat cut, matte sheen A	+$0
678	natural oak, flat cut, matte sheen A	+$0
6A1	white ash, quarter cut, matte sheen A	+$0
6K1	rift oak, rift cut, matte sheen A	+$0
6K6	burnt oak, rift cut, matte sheen A	+$0
GOU	natural walnut, flat cut, matte sheen A	+$0

For 168" wide (168) or 180" wide (180)

967	smoked paldao, quarter cut, low sheen A	+$261
969	warm paldao, quarter cut, low sheen A	+$261

For 168" wide (168) or 180" wide (180)

667	smoked paldao, quarter cut, matte sheen A	+$261
669	warm paldao, quarter cut, matte sheen A	+$261

For 168" wide (168) or 180" wide (180)

951	natural anigre, quarter cut, low sheen A	+$1044
968	figured sycamore, quarter cut, low sheen A	+$1044

For 168" wide (168) or 180" wide (180)

668	figured sycamore, quarter cut, matte sheen A	+$1044

For 168" wide (168) or 180" wide (180)

ST0	stain-to-match, price group 0 A	+$0
ST1	stain-to-match, price group 1 A	+$131
ST2	stain-to-match, price group 2 A	+$261
ST3	stain-to-match, price group 3 A	+$522
ST4	stain-to-match, price group 4 A	+$783
ST5	stain-to-match, price group 5 A	+$1044
ST6	stain-to-match, price group 6 A	+$1566
ST7	stain-to-match, price group 7 A	+$2349
ST8	stain-to-match, price group 8 A	-$65

For 192" wide (192) or 204" wide (204)

68R	recograin rosewood, flat cut, matte sheen A	+$0
68W	recograin walnut, flat cut, matte sheen A	-$74
69A	recograin frosty ash, quarter cut, matte sheen A	+$0
69G	recograin wenge, quarter cut, matte sheen A	-$74
69K	recograin oak, quarter cut, matte sheen A	-$74
69R	recograin rosewood, quarter cut, matte sheen A	+$0
69T	recograin teak, quarter cut, matte sheen A	+$0
69W	recograin walnut, quarter cut, matte sheen A	-$74
ET	clear on ash, quarter cut, matte sheen A	+$0
EU	oak on ash, quarter cut, matte sheen A	+$0
EV	walnut on ash, quarter cut, matte sheen A	+$0

For 192" wide (192) or 204" wide (204)

98R	recograin rosewood, flat cut, low sheen A	+$0
98W	recograin walnut, flat cut, low sheen A	-$74
99A	recograin frosty ash, quarter cut, low sheen A	+$0
99G	recograin wenge, quarter cut, low sheen A	-$74
99K	recograin oak, quarter cut, low sheen A	-$74
99R	recograin rosewood, quarter cut, low sheen A	+$0
99T	recograin teak, quarter cut, low sheen A	+$0
99W	recograin walnut, quarter cut, low sheen A	-$74

Axon rectangular table, wood top

continued

For 192" wide (192) or 204" wide (204)		
911	champagne maple, flat cut, low sheen A	+$0
941	natural beech, flat cut, low sheen A	+$0
942	sundance cherry, flat cut, low sheen A	+$0
943	caramel cherry, flat cut, low sheen A	+$0
946	cocoa cherry, flat cut, low sheen A	+$0
956	cocoa sapele, quarter cut, low sheen A	+$0
962	toasted walnut, flat cut, low sheen A	+$0
963	charred walnut, flat cut, low sheen A	+$0
964	bronzed walnut, flat cut, low sheen A	+$0
965	smoked walnut, flat cut, low sheen A	+$0
966	coffee walnut, flat cut, low sheen A	+$0
977	chocolate ash, flat cut, low sheen A	+$0
978	natural oak, flat cut, low sheen A	+$0
981	champagne hickory, flat cut, low sheen A	+$0
991	champagne ash, flat cut, low sheen A	+$0
998	ebony ash, flat cut, low sheen A	+$0
9A1	white ash, quarter cut, low sheen A	+$0
9K1	rift oak, rift cut, low sheen A	+$0
9K6	burnt oak, rift cut, low sheen A	+$0
ED	aged cherry, flat cut, low sheen A	+$0
EK	medium red walnut, flat cut, low sheen A	+$0
G2U	light brown walnut, flat cut, low sheen A	+$0
G40	dark brown walnut, flat cut, low sheen A	+$0
UX	walnut on cherry, flat cut, low sheen A	+$0

For 192" wide (192) or 204" wide (204)		
GOU	natural walnut, flat cut, matte sheen A	+$0
662	toasted walnut, flat cut, matte sheen A	+$0
663	charred walnut, flat cut, matte sheen A	+$0
664	bronzed walnut, flat cut, matte sheen A	+$0
665	smoked walnut, flat cut, matte sheen A	+$0
666	coffee walnut, flat cut, matte sheen A	+$0
677	chocolate ash, flat cut, matte sheen A	+$0
678	natural oak, flat cut, matte sheen A	+$0
6A1	white ash, quarter cut, matte sheen A	+$0
6K1	rift oak, rift cut, matte sheen A	+$0
6K6	burnt oak, rift cut, matte sheen A	+$0

For 192" wide (192) or 204" wide (204)		
967	smoked paldao, quarter cut, low sheen A	+$297
969	warm paldao, quarter cut, low sheen A	+$297

For 192" wide (192) or 204" wide (204)		
667	smoked paldao, quarter cut, matte sheen A	+$297
669	warm paldao, quarter cut, matte sheen A	+$297

For 192" wide (192) or 204" wide (204)		
951	natural anigre, quarter cut, low sheen A	+$1188
968	figured sycamore, quarter cut, low sheen A	+$1188

For 192" wide (192) or 204" wide (204)		
668	figured sycamore, quarter cut, matte sheen A	+$1188

For 192" wide (192) or 204" wide (204)		
ST0	stain-to-match, price group 0 A	+$0
ST1	stain-to-match, price group 1 A	+$149
ST2	stain-to-match, price group 2 A	+$297
ST3	stain-to-match, price group 3 A	+$594
ST4	stain-to-match, price group 4 A	+$891
ST5	stain-to-match, price group 5 A	+$1188
ST6	stain-to-match, price group 6 A	+$1782
ST7	stain-to-match, price group 7 A	+$2673
ST8	stain-to-match, price group 8 A	-$74

For 216" wide (216) or 240" wide (240)		
68R	recograin rosewood, flat cut, matte sheen A	+$0
68W	recograin walnut, flat cut, matte sheen A	-$86
69A	recograin frosty ash, quarter cut, matte sheen A	+$0
69G	recograin wenge, quarter cut, matte sheen A	-$86
69K	recograin oak, quarter cut, matte sheen A	-$86
69R	recograin rosewood, quarter cut, matte sheen A	+$0
69T	recograin teak, quarter cut, matte sheen A	+$0
69W	recograin walnut, quarter cut, matte sheen A	-$86
ET	clear on ash, quarter cut, matte sheen A	+$0
EU	oak on ash, quarter cut, matte sheen A	+$0
EV	walnut on ash, quarter cut, matte sheen A	+$0

For 216" wide (216) or 240" wide (240)		
98R	recograin rosewood, flat cut, low sheen A	+$0
98W	recograin walnut, flat cut, low sheen A	-$86
99A	recograin frosty ash, quarter cut, low sheen A	+$0
99G	recograin wenge, quarter cut, low sheen A	-$86
99K	recograin oak, quarter cut, low sheen A	-$86
99R	recograin rosewood, quarter cut, low sheen A	+$0
99T	recograin teak, quarter cut, low sheen A	+$0
99W	recograin walnut, quarter cut, low sheen A	-$86

Axon rectangular table, wood top

continued

For 216" wide (216) or 240" wide (240)

911	champagne maple, flat cut, low sheen A	+$0
941	natural beech, flat cut, low sheen A	+$0
942	sundance cherry, flat cut, low sheen A	+$0
943	caramel cherry, flat cut, low sheen A	+$0
946	cocoa cherry, flat cut, low sheen A	+$0
956	cocoa sapele, quarter cut, low sheen A	+$0
962	toasted walnut, flat cut, low sheen A	+$0
963	charred walnut, flat cut, low sheen A	+$0
964	bronzed walnut, flat cut, low sheen A	+$0
965	smoked walnut, flat cut, low sheen A	+$0
966	coffee walnut, flat cut, low sheen A	+$0
977	chocolate ash, flat cut, low sheen A	+$0
978	natural oak, flat cut, low sheen A	+$0
981	champagne hickory, flat cut, low sheen A	+$0
991	champagne ash, flat cut, low sheen A	+$0
998	ebony ash, flat cut, low sheen A	+$0
9A1	white ash, quarter cut, low sheen A	+$0
9K1	rift oak, rift cut, low sheen A	+$0
9K6	burnt oak, rift cut, low sheen A	+$0
ED	aged cherry, flat cut, low sheen A	+$0
EK	medium red walnut, flat cut, low sheen A	+$0
G2U	light brown walnut, flat cut, low sheen A	+$0
G40	dark brown walnut, flat cut, low sheen A	+$0
UX	walnut on cherry, flat cut, low sheen A	+$0

For 216" wide (216) or 240" wide (240)

GOU	natural walnut, flat cut, matte sheen A	+$0
662	toasted walnut, flat cut, matte sheen A	+$0
663	charred walnut, flat cut, matte sheen A	+$0
664	bronzed walnut, flat cut, matte sheen A	+$0
665	smoked walnut, flat cut, matte sheen A	+$0
666	coffee walnut, flat cut, matte sheen A	+$0
677	chocolate ash, flat cut, matte sheen A	+$0
678	natural oak, flat cut, matte sheen A	+$0
6A1	white ash, quarter cut, matte sheen A	+$0
6K1	rift oak, rift cut, matte sheen A	+$0
6K6	burnt oak, rift cut, matte sheen A	+$0

For 216" wide (216) or 240" wide (240)

967	smoked paldao, quarter cut, low sheen A	+$342
969	warm paldao, quarter cut, low sheen A	+$342

For 216" wide (216) or 240" wide (240)

667	smoked paldao, quarter cut, matte sheen A	+$342
669	warm paldao, quarter cut, matte sheen A	+$342

For 216" wide (216) or 240" wide (240)

951	natural anigre, quarter cut, low sheen A	+$1368
968	figured sycamore, quarter cut, low sheen A	+$1368

For 216" wide (216) or 240" wide (240)

668	figured sycamore, quarter cut, matte sheen A	+$1368

For 216" wide (216) or 240" wide (240)

ST0	stain-to-match, price group 0 A	+$0
ST1	stain-to-match, price group 1 A	+$171
ST2	stain-to-match, price group 2 A	+$342
ST3	stain-to-match, price group 3 A	+$684
ST4	stain-to-match, price group 4 A	+$1026
ST5	stain-to-match, price group 5 A	+$1368
ST6	stain-to-match, price group 6 A	+$2052
ST7	stain-to-match, price group 7 A	+$3078
ST8	stain-to-match, price group 8 A	-$86

Step 6. Edge Type

KW1	eased edge on wood top A	+$0

Step 7. Base Type

For 120" wide (120), 72" wide (72), 132" wide (132), 84" wide (84), 144" wide (144), 96" wide (96), or 108" wide (108)

2BB	2 bases, types B-B A	+$1398
2CC	2 bases, types C-C A	+$2609

For 156" wide (156), 168" wide (168), 180" wide (180), 192" wide (192), 204" wide (204), 216" wide (216), or 240" wide (240)

3BCB	3 bases, types B-C-B A	+$1398
3CCC	3 bases, types C-C-C A	+$2609

Step 8. Base Finish

8Q	folkstone grey A	+$0
91	white A	+$0
BK	black A	+$0

Step 9. Power

For 72" wide (72), 84" wide (84), or 96" wide (96)

1C1	1-piece top, 1 oval power cutout A	+$88
1PN	1-piece top, no power cutouts or trough A	+$0
2L1	2-piece top, 1 trough power lid A	+$641

Axon rectangular table, wood top

continued

For 120" wide (120) or 108" wide (108)		
2C2	2-piece top, 2 oval power cutouts A	+$175
2L2	2-piece top, 2 trough power lids A	+$1013
2PN	2-piece top, no power cutouts or lids A	+$0
For 132" wide (132)		
2C2	2-piece top, 2 oval power cutouts A	+$175
2L2	2-piece top, 2 trough power lids A	+$1013
2PN	2-piece top, no power cutouts or lids A	+$0
For 144" wide (144)		
2C3	2-piece top, 3 oval power cutouts A	+$263
2L3	2-piece top, 3 trough power lids A	+$1375
2PN	2-piece top, no power cutouts or lids A	+$0
For 156" wide (156), 168" wide (168), 180" wide (180), or 192" wide (192)		
3C3	3-piece top, 3 oval power cutouts A	+$263
3PN	3-piece top, no power cutouts or lids A	+$0
4L3	4-piece top, 3 trough power lids A	+$1375
For 204" wide (204) or 216" wide (216)		
3C3	3-piece top, 3 oval power cutouts A	+$263
3PN	3-piece top, no power cutouts or lids A	+$0
4L4	4-piece top, 4 trough power lids A	+$1786
For 240" wide (240)		
4C4	4-piece top, 4 oval power cutouts A	+$351
4PN	4-piece top, no power cutouts or lids A	+$0
6L4	6-piece top, 4 trough power lids A	+$1786

Step 10. Trough Cover/Bezel Finish

For 2-piece top, 2 trough power lids (2L2), 2-piece top, 3 trough power lids (2L3), 2-piece top, 1 trough power lid (2L1), 4-piece top, 3 trough power lids (4L3), 4-piece top, 4 trough power lids (4L4), or 6-piece top, 4 trough power lids (6L4)

T99	white trough cover and bezel A	+$0
TBX	black trough cover, titanium bezel A	+$0
T9X	white trough cover, titanium bezel A	+$0
TBB	black trough cover and bezel A	+$0
TXX	titanium trough cover and bezel A	+$0

Axon video conference table, glass top KTVG-

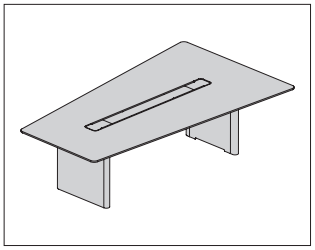

Product Information

Description

The Axon™ video conference table is 48″ deep at 1 end and 60″ deep at the other end. It comes in several widths ranging from 96″ wide to 144″ wide. Glass tops are 1/2″-thick tempered low-iron back-painted glass with satin etched surface.

Notes

Table understructure finish matches specified base finish.

Base type A is a pair of 2 3/4″ diameter × 26″ high metal post legs.

Base type B is 2 3/4″ deep × 28 1/4″ wide × 26″ high.

Base type C is 7 1/8″ deep × 28 1/4″ wide × 26″ high.

When specifying table with trough power lids (4L2, 4L3, 6L3) option, table includes 6 5/8″ deep × 5 3/4″ high trough with removable metal cover between bidirectional flip-up metal power module lids. Includes trough bezel and lids. Order trough power modules (KPT1, KPT2) separately.

Table includes knockouts on underside at edge of table to accept edge USB power modules. Order edge USB power modules (KUSBx) separately.

Dimensions

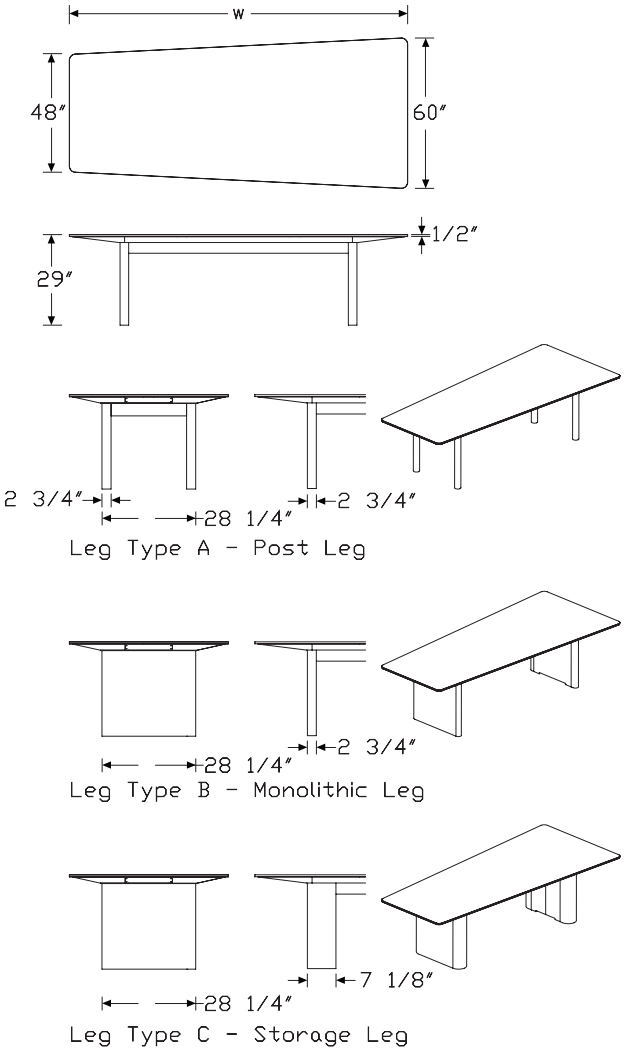

Axon video conference table, glass top *continued*

Specification Information

Step 1.

KTVG- A

Step 2. Depth

60	60" deep A	

Step 3. Width

96	96" wide A	
108	108" wide A	
120	120" wide A	
132	132" wide A	
144	144" wide A	

Step 4. Height

29	29" high A	

Prices for Steps 1-4.

			29
KTVG-	**60**	**96**	$20905
		108	$22073
		120	$23582
		132	$24044
		144	$24638

Step 5. Top Finish

GKB	black back painted, satin etched A	+$0
GKF	folkstone grey back painted, satin etched A	+$0
GKN	warm grey neutral back painted, satin etched A	+$0
GKW	white back painted, satin etched A	+$0

Step 6. Base Type

2BB	2 bases, types B-B A	+$1398
2CC	2 bases, types C-C A	+$2609

Step 7. Base Finish

8Q	folkstone grey A	+$0
91	white A	+$0
BK	black A	+$0

Step 8. Power

For 108" wide (108), 120" wide (120), or 132" wide (132)

4L2	4-piece top, 2 trough power lids A	+$1184

For 144" wide (144)

4L3	4-piece top, 3 trough power lids A	+$1546

For 96" wide (96)

4L1	4-piece top, 1 trough power lid A	+$822

Step 9. Trough Cover/Bezel Finish

For 4-piece top, 1 trough power lid (4L1), 4-piece top, 2 trough power lids (4L2), or 4-piece top, 3 trough power lids (4L3)

T99	white trough cover and bezel A	+$0
TBX	black trough cover, titanium bezel A	+$0
T9X	white trough cover, titanium bezel A	+$0
TBB	black trough cover and bezel A	+$0
TXX	titanium trough cover and bezel A	+$0

Axon video conference table, laminate top KTVL-

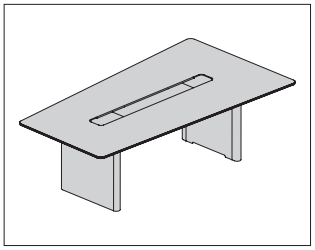

Product Information

Description

The Axon™ video conference table is 48″ deep at 1 end and 60″ deep at the other end. It comes in several widths ranging from 96″ wide to 144″ wide. Laminate tops are 5/8″-thick high-pressure laminate with matching eased edge banding.

Notes

Table understructure finish matches specified base finish.

Base type A is a pair of 2 3/4″ diameter × 26″ high metal post legs.

Base type B is 2 3/4″ deep × 28 1/4″ wide × 26″ high.

Base type C is 7 1/8″ deep × 28 1/4″ wide × 26″ high.

When specifying table with trough power lids (2L2, 2L3, 4L3) option, table includes 6 5/8″ deep × 5 3/4″ high trough with removable metal cover between bidirectional flip-up metal power module lids. Includes trough bezel and lids. Order trough power modules (KPT1, KPT2) separately.

Table includes knockouts on underside at edge of table to accept edge USB power modules. Order edge USB power modules (KUSBx) separately.

Dimensions

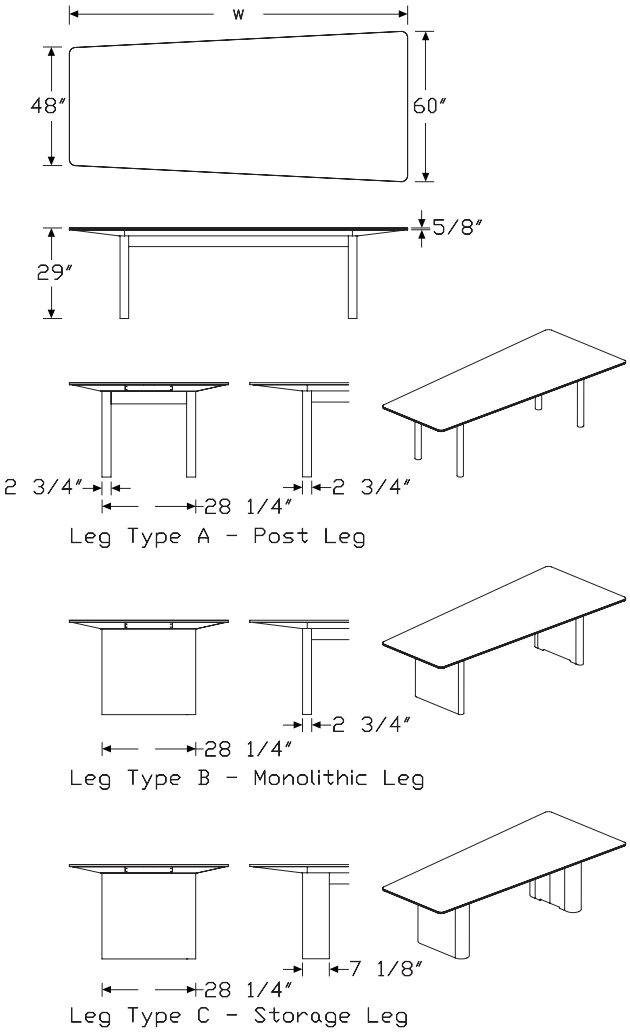

Axon video conference table, laminate top *continued*

Specification Information

Step 1.

KTVL- A

Step 2. Depth

60	60" deep A

Step 3. Width

96	96" wide A
108	108" wide A
120	120" wide A
132	132" wide A
144	144" wide A

Step 4. Height

29	29" high A

Prices for Steps 1-4.

			29
KTVL-	**60**	**96**	$14768
		108	$15274
		120	$15996
		132	$16305
		144	$16733

Step 5. Top Finish

For 108" wide (108), 120" wide (120), or 132" wide (132)

8Q	folkstone grey A	+$0
91	white A	+$0
98	studio white A	+$0
CL	cool grey neutral A	+$0
WL	sandstone A	+$0
WN	warm grey neutral A	+$0
X1	chalk white A	+$0

For 108" wide (108), 120" wide (120), or 132" wide (132)

LS1	soft touch brite white A	+$972
LS1	soft touch brite white A	+$1066
LS2	soft touch neutral white A	+$972
LS2	soft touch neutral white A	+$1066
LS3	soft touch folkstone grey A	+$972
LS3	soft touch folkstone grey A	+$1066
LS4	soft touch fog A	+$972
LS4	soft touch fog A	+$1066
LS5	soft touch storm A	+$972
LS5	soft touch storm A	+$1066
LS6	soft touch black A	+$972
LS6	soft touch black A	+$1066
LS7	soft touch earth A	+$972
LS7	soft touch earth A	+$1066

For 144" wide (144)

8Q	folkstone grey A	+$0
91	white A	+$0
98	studio white A	+$0
CL	cool grey neutral A	+$0
WL	sandstone A	+$0
WN	warm grey neutral A	+$0
X1	chalk white A	+$0

For 144" wide (144)

LS1	soft touch brite white A	+$2045
LS2	soft touch neutral white A	+$2045
LS3	soft touch folkstone grey A	+$2045
LS4	soft touch fog A	+$2045
LS5	soft touch storm A	+$2045
LS6	soft touch black A	+$2045
LS7	soft touch earth A	+$2045

For 96" wide (96)

8Q	folkstone grey A	+$0
91	white A	+$0
98	studio white A	+$0
CL	cool grey neutral A	+$0
WL	sandstone A	+$0
WN	warm grey neutral A	+$0
X1	chalk white A	+$0

Axon video conference table, laminate top *continued*

For 96" wide (96)

LS1	soft touch brite white A	+$972
LS2	soft touch neutral white A	+$972
LS3	soft touch folkstone grey A	+$972
LS4	soft touch fog A	+$972
LS5	soft touch storm A	+$972
LS6	soft touch black A	+$972
LS7	soft touch earth A	+$972

Step 6. Edge Type

KL1	eased edge on laminate top A	+$0

Step 7. Base Type

2BB	2 bases, types B-B A	+$1398
2CC	2 bases, types C-C A	+$2609

Step 8. Base Finish

8Q	folkstone grey A	+$0
91	white A	+$0
BK	black A	+$0

Step 9. Power

For 108" wide (108), 120" wide (120), or 132" wide (132)

2L2	2-piece top, 2 trough power lids A	+$1013

For 144" wide (144)

2L3	2-piece top, 3 trough power lids A	+$1375

For 96" wide (96)

2L1	2-piece top, 1 trough power lid A	+$641

Step 10. Trough Cover/Bezel Finish

For 2-piece top, 1 trough power lid (2L1), 2-piece top, 2 trough power lids (2L2), or 2-piece top, 3 trough power lids (2L3)

T99	white trough cover and bezel A	+$0
TBX	black trough cover, titanium bezel A	+$0
T9X	white trough cover, titanium bezel A	+$0
TBB	black trough cover and bezel A	+$0
TXX	titanium trough cover and bezel A	+$0

Axon video conference table, stone top KTVS-

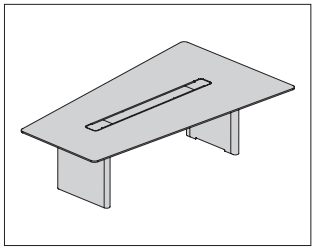

Product Information

Description

The Axon™ video conference table is 48″ deep at 1 end and 60″ deep at the other end. It comes in several widths ranging from 96″ wide to 144″ wide. Stone tops are $^{13}/_{16}$″-thick with eased edge.

Notes

Table understructure finish matches specified base finish.

Base type A is a pair of $2^{3}/_{4}$″ diameter × 26″ high metal post legs.

Base type B is $2^{3}/_{4}$″ deep × $28^{1}/_{4}$″ wide × 26″ high.

Base type C is $7^{1}/_{8}$″ deep × $28^{1}/_{4}$″ wide × 26″ high.

When specifying table with trough power lids (4L2, 4L3, 6L3) option, table includes $6^{5}/_{8}$″ deep × $5^{3}/_{4}$″ high trough with removable metal cover between bidirectional flip-up metal power module lids. Includes trough bezel and lids. Order trough power modules (KPT1, KPT2) separately.

Table includes knockouts on underside at edge of table to accept edge USB power modules. Order edge USB power modules (KUSBx) separately.

Dimensions

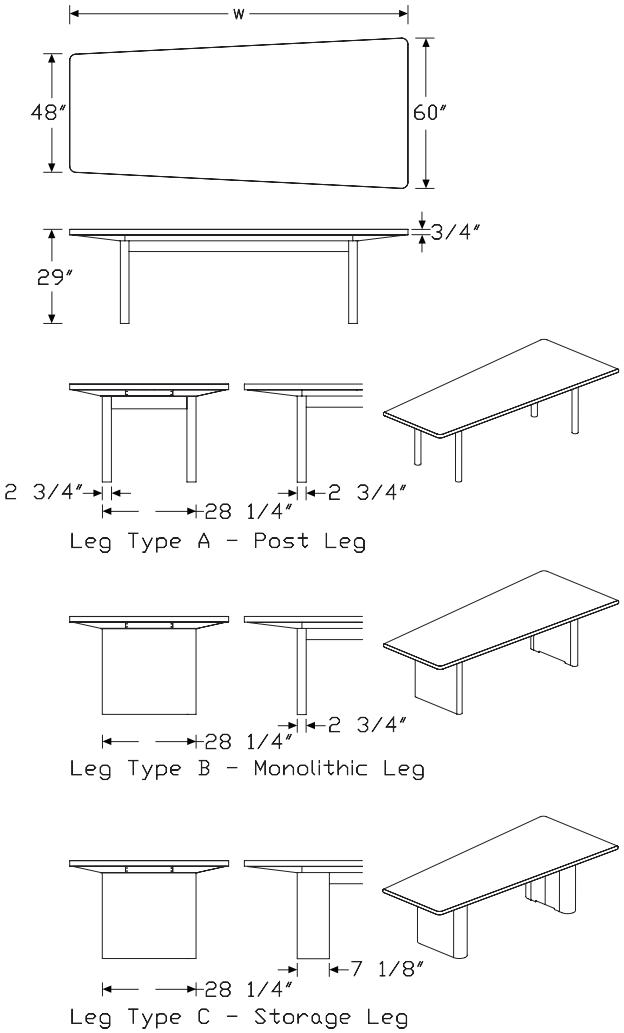

Axon video conference table, stone top *continued*

Specification Information

Step 1.

KTVS- A

Step 2. Depth

60	60" deep A

Step 3. Width

96	96" wide A
108	108" wide A
120	120" wide A
132	132" wide A
144	144" wide A

Step 4. Height

29	29" high A

Prices for Steps 1-4.

			29
KTVS-	**60**	**96**	$39728
		108	$42261
		120	$45177
		132	$46874
		144	$49240

Step 5. Top Finish

		96	**108**	**120**	**132**	**144**
5UH	georgia grey honed marble A	+$0	0	0	0	0
96H	white carrara honed marble A	+$0	0	0	0	0

		96	**108**	**120**	**132**	**144**
QBE	Cambria® berwyn matte quartz A	+$4206	2658	2412	3285	4140
QBK	Cambria® blackwood matte quartz A	+$4206	2658	2412	3285	4140
QCA	Cambria® carrick matte quartz A	+$4206	2658	2412	3285	4140
QCL	Cambria® clareanne matte quartz A	+$4206	2658	2412	3285	4140

Step 6. Base Type

2BB	2 bases, types B-B A	+$1398
2CC	2 bases, types C-C A	+$2609

Step 7. Base Finish

8Q	folkstone grey A	+$0
91	white A	+$0
BK	black A	+$0

Step 8. Power

For 108" wide (108), 120" wide (120), or 132" wide (132)

4L2	4-piece top, 2 trough power lids A	+$0

For 144" wide (144)

4L3	4-piece top, 3 trough power lids A	+$2961

For 96" wide (96)

4L1	4-piece top, 1 trough power lid A	+$2237

Step 9. Trough Cover/Bezel Finish

For 4-piece top, 1 trough power lid (4L1), 4-piece top, 2 trough power lids (4L2), or 4-piece top, 3 trough power lids (4L3)

T99	white trough cover and bezel A	+$0
TBX	black trough cover, titanium bezel A	+$0
T9X	white trough cover, titanium bezel A	+$0
TBB	black trough cover and bezel A	+$0
TXX	titanium trough cover and bezel A	+$0

Axon video conference table, wood top KTVW-

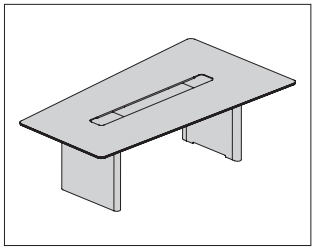

Product Information

Description

The Axon™ video conference table is 48″ deep at 1 end and 60″ deep at the other end. It comes in several widths ranging from 96″ wide to 144″ wide. Wood tops are 5/8″-thick with veneer and matching eased edge banding.

Notes

Table understructure finish matches specified base finish.

Base type A is a pair of 2 3/4″ diameter × 26″ high metal post legs.

Base type B is 2 3/4″ deep × 28 1/4″ wide × 26″ high.

Base type C is 7 1/8″ deep × 28 1/4″ wide × 26″ high.

When specifying table with trough power lids (2L2, 2L3, 4L3) option, table includes 6 5/8″ deep × 5 3/4″ high trough with removable metal cover between bidirectional flip-up metal power module lids. Includes trough bezel and lids. Order trough power modules (KPT1, KPT2) separately.

Table includes knockouts on underside at edge of table to accept edge USB power modules. Order edge USB power modules (KUSBx) separately.

Dimensions

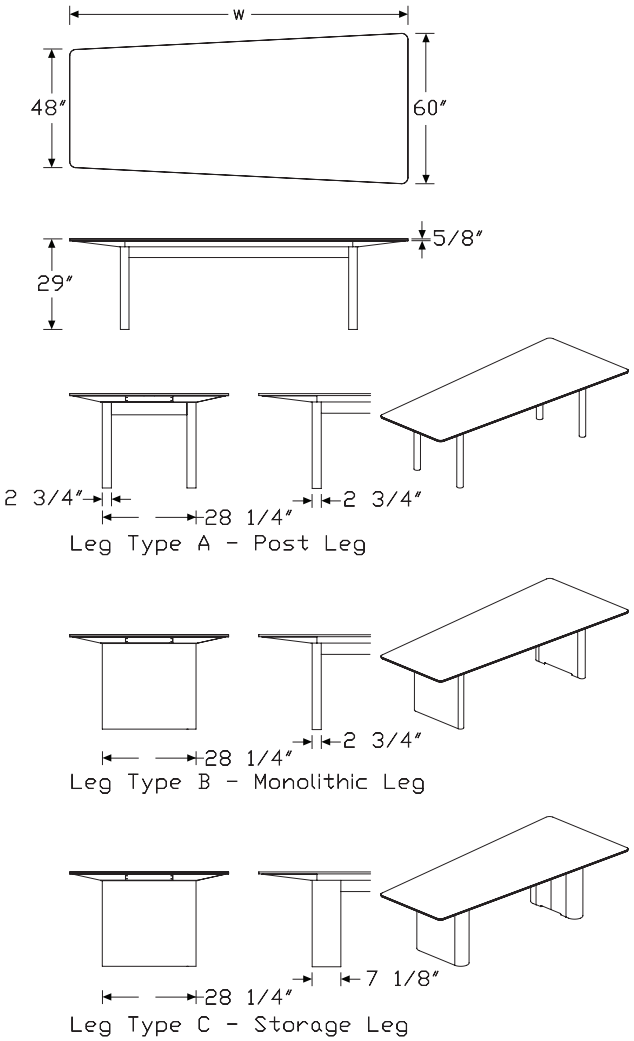

Axon video conference table, wood top *continued*

Specification Information

Step 1.

KTVW- A

Step 2. Depth

60 60″ deep A

Step 3. Width

96 96″ wide A
108 108″ wide A
120 120″ wide A
132 132″ wide A
144 144″ wide A

Step 4. Height

29 29″ high A

Prices for Steps 1-4.

			29
KTVW-	**60**	**96**	$14333
		108	$14799
		120	$15381
		132	$15677
		144	$16092

Step 5. Top Finish

		96	108	120	132	144
68R	recograin rosewood, flat cut, matte sheen A	+$0	0	0	0	0
68W	recograin walnut, flat cut, matte sheen A	-$47	-47	-56	-38	-38
69A	recograin frosty ash, quarter cut, matte sheen A	+$0	0	0	0	0
69G	recograin wenge, quarter cut, matte sheen A	-$47	-47	-56	-38	-38
69K	recograin oak, quarter cut, matte sheen A	-$47	-47	-56	-38	-38
69R	recograin rosewood, quarter cut, matte sheen A	+$0	0	0	0	0
69T	recograin teak, quarter cut, matte sheen A	+$0	0	0	0	0
69W	recograin walnut, quarter cut, matte sheen A	-$47	-47	-56	-38	-38
ET	clear on ash, quarter cut, matte sheen A	+$0	0	0	0	0
EU	oak on ash, quarter cut, matte sheen A	+$0	0	0	0	0
EV	walnut on ash, quarter cut, matte sheen A	+$0	0	0	0	0

Axon video conference table, wood top *continued*

		96	108	120	132	144
98R	recograin rosewood, flat cut, low sheen A	+$0	0	0	0	0
98W	recograin walnut, flat cut, low sheen A	-$47	-47	-56	-38	-38
99A	recograin frosty ash, quarter cut, low sheen A	+$0	0	0	0	0
99G	recograin wenge, quarter cut, low sheen A	-$47	-47	-56	-38	-38
99K	recograin oak, quarter cut, low sheen A	-$47	-47	-56	-38	-38
99R	recograin rosewood, quarter cut, low sheen A	+$0	0	0	0	0
99T	recograin teak, quarter cut, low sheen A	+$0	0	0	0	0
99W	recograin walnut, quarter cut, low sheen A	-$47	-47	-56	-38	-38

		96	108	120	132	144
911	champagne maple, flat cut, low sheen A	+$0	0	0	0	0
941	natural beech, flat cut, low sheen A	+$0	0	0	0	0
942	sundance cherry, flat cut, low sheen A	+$0	0	0	0	0
943	caramel cherry, flat cut, low sheen A	+$0	0	0	0	0
946	cocoa cherry, flat cut, low sheen A	+$0	0	0	0	0
956	cocoa sapele, quarter cut, low sheen A	+$0	0	0	0	0
962	toasted walnut, flat cut, low sheen A	+$0	0	0	0	0
963	charred walnut, flat cut, low sheen A	+$0	0	0	0	0
964	bronzed walnut, flat cut, low sheen A	+$0	0	0	0	0
965	smoked walnut, flat cut, low sheen A	+$0	0	0	0	0
966	coffee walnut, flat cut, low sheen A	+$0	0	0	0	0
977	chocolate ash, flat cut, low sheen A	+$0	0	0	0	0
978	natural oak, flat cut, low sheen A	+$0	0	0	0	0
981	champagne hickory, flat cut, low sheen A	+$0	0	0	0	0
991	champagne ash, flat cut, low sheen A	+$0	0	0	0	0
998	ebony ash, flat cut, low sheen A	+$0	0	0	0	0
9A1	white ash, quarter cut, low sheen A	+$0	0	0	0	0
9K1	rift oak, rift cut, low sheen A	+$0	0	0	0	0
9K6	burnt oak, rift cut, low sheen A	+$0	0	0	0	0
ED	aged cherry, flat cut, low sheen A	+$0	0	0	0	0
EK	medium red walnut, flat cut, low sheen A	+$0	0	0	0	0
G2U		+$0	0	0	0	0

Axon video conference table, wood top *continued*

	light brown walnut, flat cut, low sheen A					
G40	dark brown walnut, flat cut, low sheen A	+$0	0	0	0	0
UX	walnut on cherry, flat cut, low sheen A	+$0	0	0	0	0

		96	108	120	132	144
662	toasted walnut, flat cut, matte sheen A	+$0	0	0	0	0
663	charred walnut, flat cut, matte sheen A	+$0	0	0	0	0
664	bronzed walnut, flat cut, matte sheen A	+$0	0	0	0	0
665	smoked walnut, flat cut, matte sheen A	+$0	0	0	0	0
666	coffee walnut, flat cut, matte sheen A	+$0	0	0	0	0
677	chocolate ash, flat cut, matte sheen A	+$0	0	0	0	0
678	natural oak, flat cut, matte sheen A	+$0	0	0	0	0
6A1	white ash, quarter cut, matte sheen A	+$0	0	0	0	0
6K1	rift oak, rift cut, matte sheen A	+$0	0	0	0	0
6K6	burnt oak, rift cut, matte sheen A	+$0	0	0	0	0
GOU	natural walnut, flat cut, matte sheen A	+$0	0	0	0	0

		96	108	120	132	144
967	smoked paldao, quarter cut, low sheen A	+$189	189	225	153	153
969	warm paldao, quarter cut, low sheen A	+$189	189	225	153	153

		96	108	120	132	144
667	smoked paldao, quarter cut, matte sheen A	+$189	189	225	153	153
669	warm paldao, quarter cut, matte sheen A	+$189	189	225	153	153

		96	108	120	132	144
951	natural anigre, quarter cut, low sheen A	+$756	756	900	612	612
968	figured sycamore, quarter cut, low sheen A	+$756	756	900	612	612

		96	108	120	132	144
668	figured sycamore, quarter cut, matte sheen A	+$756	756	900	612	612

		96	108	120	132	144
ST0	stain-to-match, price group 0 A	+$0	0	0	0	0
ST1	stain-to-match, price group 1 A	+$95	95	113	77	77
ST2	stain-to-match, price group 2 A	+$189	189	225	153	153
ST3	stain-to-match, price group 3 A	+$378	378	450	306	306
ST4	stain-to-match, price group 4 A	+$567	567	675	459	459
ST5	stain-to-match, price group 5 A	+$756	756	900	612	612
ST6	stain-to-match, price group 6 A	+$1134	1134	1350	918	918
ST7	stain-to-match, price group 7 A	+$1701	1701	2025	1377	1377
ST8	stain-to-match, price group 8 A	-$47	-47	-56	-38	-38

Step 6. Edge Type		
KW1	eased edge on wood top A	+$0

Step 7. Base Type		
2BB	2 bases, types B-B A	+$1398
2CC	2 bases, types C-C A	+$2609

Step 8. Base Finish		
8Q	folkstone grey A	+$0
91	white A	+$0
BK	black A	+$0

Axon video conference table, wood top *continued*

Step 9. Power		
For 108" wide (108), 120" wide (120), or 132" wide (132)		
2L2	2-piece top, 2 trough power lids A	+$1013
For 144" wide (144)		
2L3	2-piece top, 3 trough power lids A	+$1375
For 96" wide (96)		
2L1	2-piece top, 1 trough power lid A	+$641

Step 10. Trough Cover/Bezel Finish *For 2-piece top, 1 trough power lid (2L1), 2-piece top, 2 trough power lids (2L2), or 2-piece top, 3 trough power lids (2L3)*		
T99	white trough cover and bezel A	+$0
TBX	black trough cover, titanium bezel A	+$0
T9X	white trough cover, titanium bezel A	+$0
TBB	black trough cover and bezel A	+$0
TXX	titanium trough cover and bezel A	+$0

Axon Oval Power Module, Single KPV1

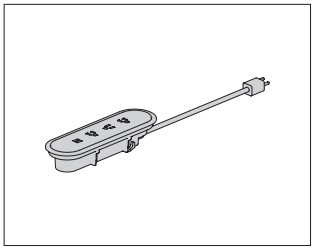

Product Information

Description

This oval power module includes 3 simplex receptacles and dual USB charging ports. Product is UL Listed.

Dimensions

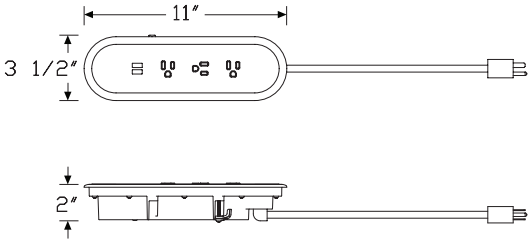

Specification Information

Step 1.

KPV1 A		$786

Step 2. Power Type

H	hardwired A	+$125
P	plug-in A	+$0

Step 3. Cord/Conduit Length

10	10′ cord/conduit A	+$0
16	16′ 6″ cord/conduit A	+$75

Step 4. Finish

91	white bezel, white faceplate A	+$0
BK	black bezel, black faceplate A	+$0
XT91	titanium bezel, white faceplate A	+$0
XTBK	titanium bezel, black faceplate A	+$0

Axon Oval Power Module, Double KPV2

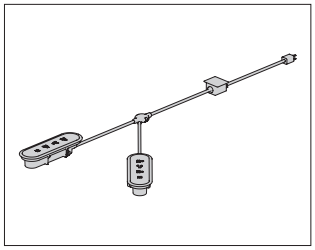

Product Information

Description

This oval power module includes 3 simplex receptacles and dual USB charging ports. Product is UL Listed.

Dimensions

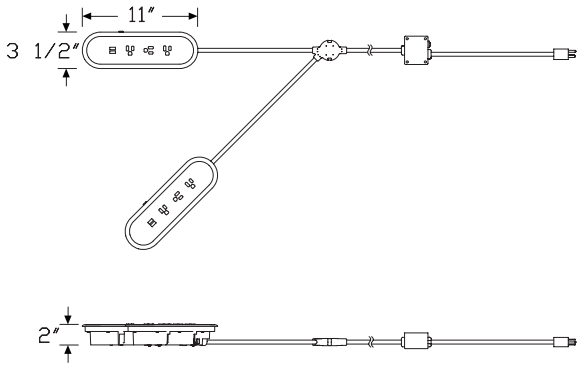

Specification Information

Step 1.

KPV2 A		$1972

Step 2. Power Type

P	plug-in A	+$0

Step 3. Cord Length

10	10′ cord A	+$0
16	16′ 6″ cord/conduit A	+$75

Step 4. Finish

91	white bezel, white faceplate A	+$0
BK	black bezel, black faceplate A	+$0
XT91	titanium bezel, white faceplate A	+$0
XTBK	titanium bezel, black faceplate A	+$0

Axon Round Power Module KPR1

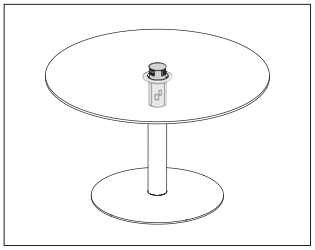

Product Information

Description

This round power module includes 3 simplex receptacles and dual USB-A charging ports around a pop-up column. It is designed for use in round tables. Round power module is UL Listed.

Dimensions

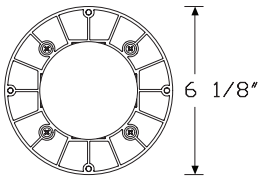

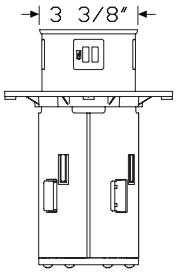

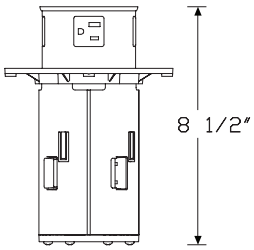

Specification Information

Step 1.

KPR1 A		$800

Step 2. Power Type

H	hardwired A	+$125
P	plug-in A	+$0

Step 3. Cord Length

06	6′ cord A	+$0
10	10′ cord A	+$30

Step 4. Finish

P91	white power lid, white column A	+$0
PBK	black power lid, black column A	+$0
PX91	titanium power lid, white column A	+$0
PXBK	titanium power lid, black column A	+$0

Axon Trough Power Module, Single — KPT1

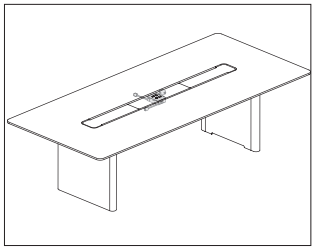

Product Information

Description

This trough power module is a single module with cord and 3-prong plug or hardwire conduit. It is designed for use with rectangular or video conference tables with a trough and power lids. Trough power module includes 3 simplex receptacles, dual USB A charging ports, and 2 data openings. Each data opening accommodates 2 Extron® AAP-100 low profile AAP™ mounting frames. Each mounting frame accepts up to 2 single-space AAP Architectural Adapter Plates. Extron components are not included and must be field supplied. Trough power module is UL Listed.

Dimensions

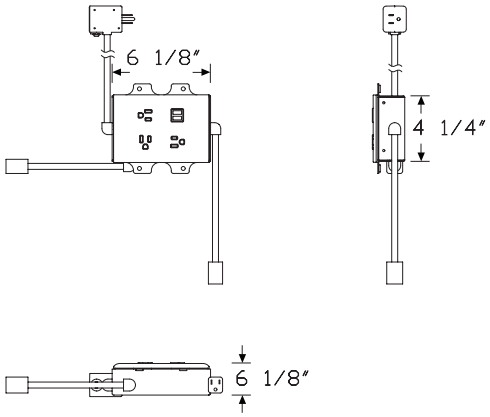

Specification Information

Step 1.		
KPT1 A		$650
Step 2. Power Type		
H	hardwired A	+$79
P	plug-in A	+$0
Step 3. Cord/Conduit Length		
10	10′ cord/conduit A	+$0
16	16′ 6″ cord/conduit A	+$86
Step 4. Finish		
BK	black A	+$0

Axon Trough Power Module, Double

KPT2

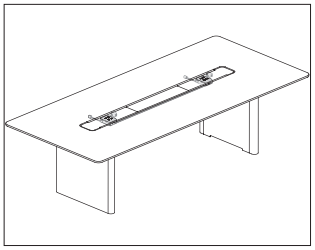

Product Information

Description

This trough power module is a set of 2 interconnected modules with 1 cord. It is designed for use with rectangular or video conference tables with a trough and power lids. Trough power module includes 3 simplex receptacles, dual USB A charging ports, and 2 data openings. Each data opening accommodates up to 4 Extron® AAP-100 faceplates. Extron components are not included and must be field supplied. Trough power modules are UL Listed.

Dimensions

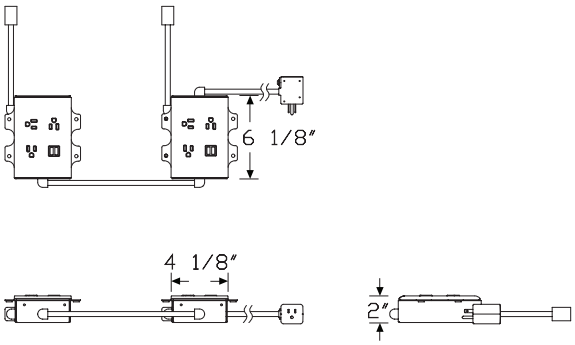

Specification Information

Step 1.

KPT2 A		$1339

Step 2. Power Type

P	plug-in A	+$0

Step 3. Cord Length

10	10′ cord A	+$0
16	16′ 6″ cord/conduit A	+$86

Step 4. Finish

BK	black A	+$0

Axon Cable Retractor Kit, for use in Trough KCRT-

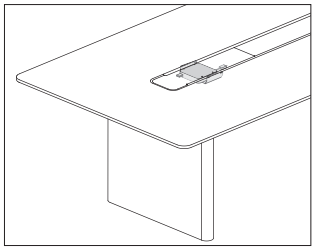

Product Information

Description

This cable retractor is for use in the Axon™ table power trough.

Notes

See Axon planning guide for more information.

Dimensions

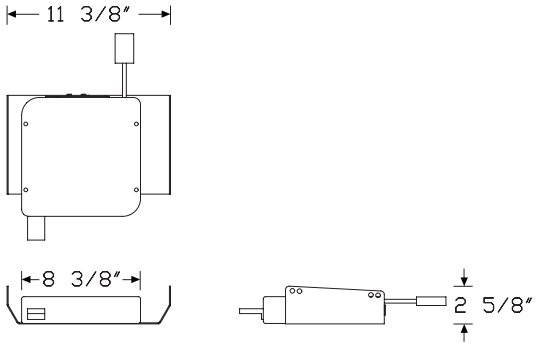

Specification Information

Step 1.

KCRT- A

Step 2. Type

1	legrand cable retractor with bracket, single A	

Prices for Steps 1-2.

KCRT- 1		$670

Step 3. Connector Type

CAT6	Cat6 cable/connector A	+$0
HDMI	HDMI cable/connector A	+$0
VGA	VGA cable/connector A	+$0

Cable retractor kit, for use in C style base or conference caddy

KCRC-

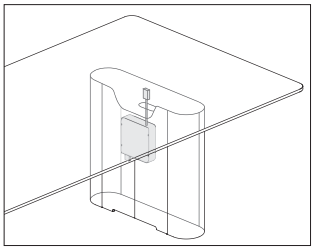

Product Information

Description

These cable retractors are for use in base type C or Conference Caddy. Each base or caddy can accommodate 1 or 2 cable retractors.

Notes

Legrand (1, 2) cable retractor includes different brackets for single or double retractor installation.

FSR (3) cable retractor bracket is the same for single or double retractor installation. Specify 1 bracket per cable retractor. FSR cable retractor must be supplied by the customer.

Dimensions

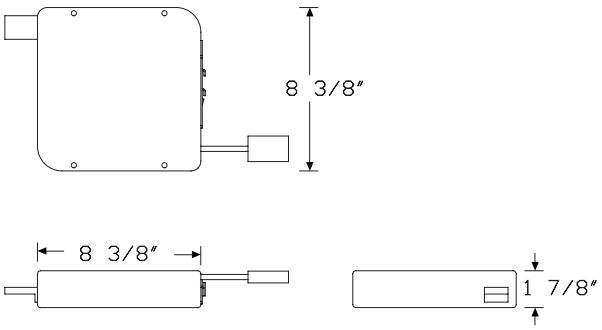

Specification Information

Step 1.

KCRC- A

Step 2. Type

1	legrand cable retractor with bracket, single A	
2	legrand cable retractor with bracket, double A	
3	bracket for FSR cable retractor A	

Prices for Steps 1-2.

KCRC-	**1**	$670
	2	$1340
	3	$112

Step 3. Connector Type

For legrand cable retractor with bracket, single (1) or legrand cable retractor with bracket, double (2)

CAT6	Cat6 cable/connector A	+$0
HDMI	HDMI cable/connector A	+$0
VGA	VGA cable/connector A	+$0

Axon USB Modules, set of 4 KUSB4

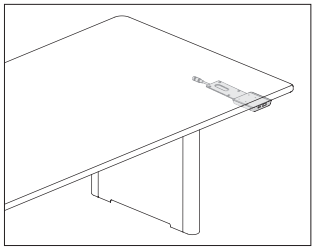

Product Information

Description

This set of 4 USB power modules is for use with Axon™ rectangular and video conference tables 72", 84", and 96" wide. Each USB power module includes 1 USB-A and 1 USB-C port. USB power modules plug into an included plug strip with 6 simplex receptacles. Plug strip can be specified with a 10' cord with 3-prong plug or 10' hardwire conduit.

Dimensions

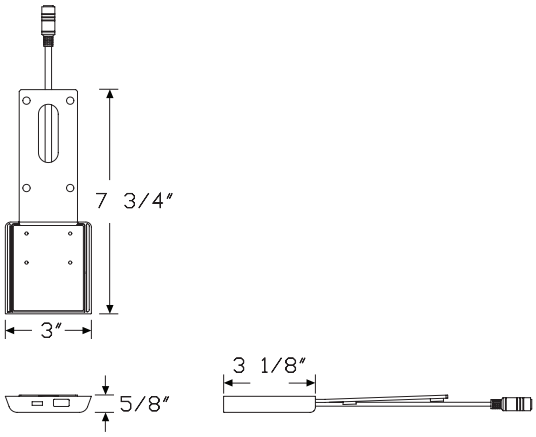

Specification Information

Step 1.

KUSB4 A		$1058

Step 2. Power Type

H	hardwired A	+$200
P	plug-in A	+$0

Step 3. Plug Strip Cord/Conduit Length

10	10' cord/conduit A	+$0

Step 4. Finish

91	white A	+$0
BK	black A	+$0

Axon USB Modules, set of 6 KUSB6

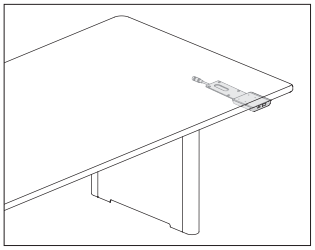

Product Information

Description

This set of 6 USB power modules is for use with Axon™ rectangular and video conference tables 108", 120", 132", and 144" wide. Each USB power module includes 1 USB-A and 1 USB-C port. USB power modules plug into an included plug strip with 6 simplex receptacles. Plug strip can be specified with a 10' cord with 3-prong plug or 10' hardwire conduit.

Dimensions

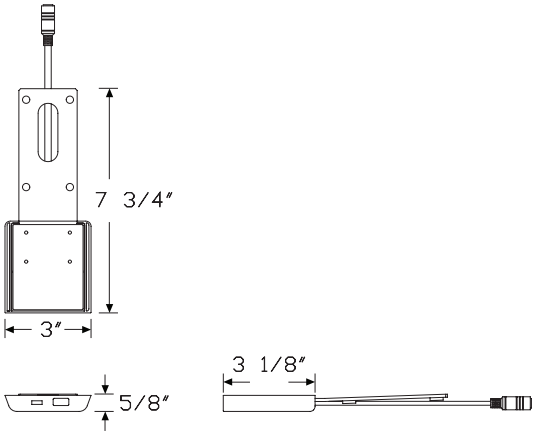

Specification Information

Step 1.

KUSB6 A		$1587

Step 2. Power Type

H	hardwired A	+$200
P	plug-in A	+$0

Step 3. Plug Strip Cord/Conduit Length

10	10' cord/conduit A	+$0

Step 4. Finish

91	white A	+$0
BK	black A	+$0

Axon USB Modules, set of 8 KUSB8

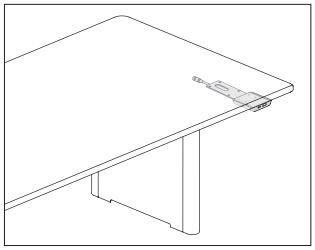

Product Information

Description

This set of 8 USB power modules is for use with Axon™ rectangular and video conference tables 180", 192", and 240" wide. Each USB power module includes 1 USB-A and 1 USB-C port. USB power modules plug into an included plug strip with 6 simplex receptacles. Plug strip can be specified with a 10' cord with 3-prong plug or 10' hardwire conduit.

Dimensions

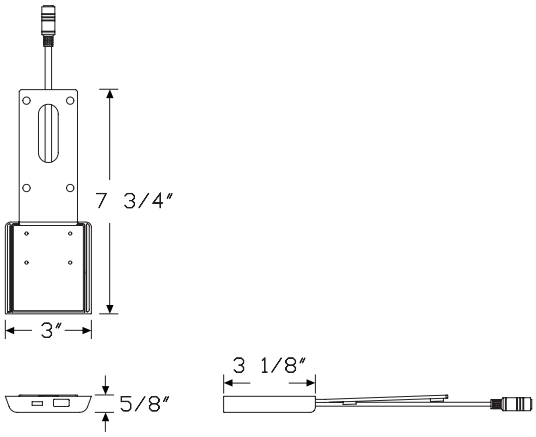

Specification Information

Step 1.

KUSB8 A		$2116

Step 2. Power Type

H	hardwired A	+$200
P	plug-in A	+$0

Step 3. Plug Strip Cord/Conduit Length

10	10' cord/conduit A	+$0

Step 4. Finish

91	white A	+$0
BK	black A	+$0

Axon USB Modules, set of 10 KUSB1

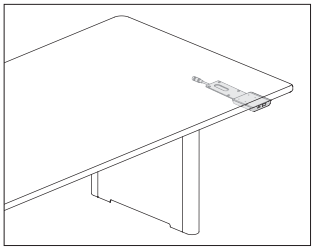

Product Information

Description

This set of 10 USB power modules is for use with Axon™ rectangular and video conference tables 156", 168", 216", and 204" wide. Each USB power module includes 1 USB-A and 1 USB-C port. USB power modules plug into an included plug strip with 6 simplex receptacles. Plug strip can be specified with a 10' cord with 3-prong plug or 10' hardwire conduit.

Dimensions

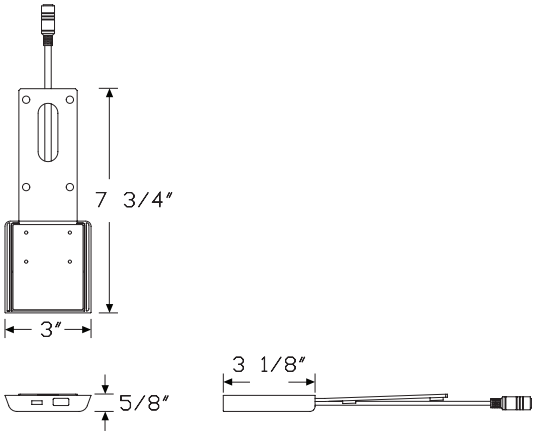

Specification Information

Step 1.

KUSB10 A		$2646

Step 2. Power Type

H	hardwired A	+$200
P	plug-in A	+$0

Step 3. Plug Strip Cord/Conduit Length

10	10' cord/conduit A	+$0

Step 4. Finish

91	white A	+$0
BK	black A	+$0

Axon USB modules, for video conference tables 96" wide

KUSBV

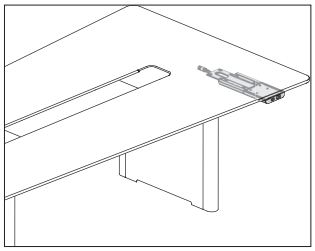

Product Information

Description

This set of 4 edge USB power modules is for use with Axon™ video conference tables 96″ wide. Each USB power module includes 1 USB-A and 1 USB-C port. USB power modules plug into an included plug strip with 6 simplex receptacles. Power strip with hardwired conduit has a metal housing. Corded version of power strip has a plastic housing.

Dimensions

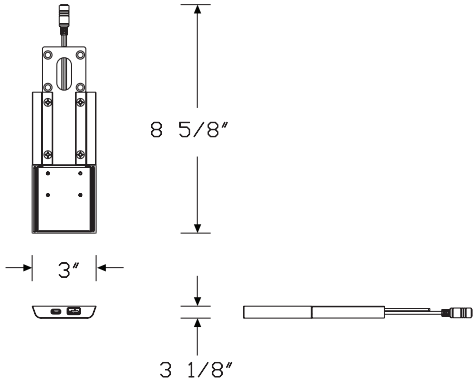

Specification Information

Step 1.

KUSBVA A		$1149

Step 2. Power Type

P	plug-in A	+$0
H	hardwired A	+$200

Step 3. Plug Strip Cord/Conduit Length

10	10′ cord/conduit A	+$0

Step 4. Finish

91	white A	+$0
BK	black A	+$0

Axon USB modules, for video conference tables 108" to 132" wide

KUSBV

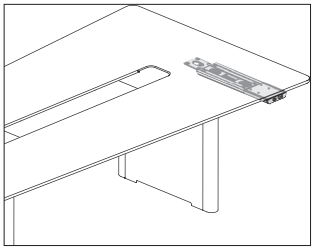

Product Information

Description

This set of 6 edge USB power modules is for use with Axon™ video conference tables 108", 120", and 132" wide. Each USB power module includes 1 USB-A and 1 USB-C port. USB power modules plug into an included plug strip with 6 simplex receptacles. Power strip with hardwired conduit has a metal housing. Corded version of power strip has a plastic housing.

Dimensions

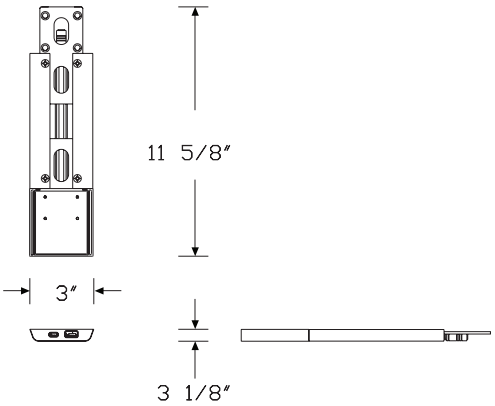

Specification Information

Step 1.

KUSBVB A		$1723

Step 2. Power Type

P	plug-in A	+$0
H	hardwired A	+$200

Step 3. Plug Strip Cord/Conduit Length

10	10' cord/conduit A	+$0

Step 4. Finish

91	white A	+$0
BK	black A	+$0

Axon USB modules, for video conference tables 144" wide

KUSBV

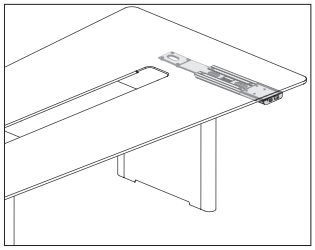

Product Information

Description

This set of 6 edge USB power modules is for use with Axon™ video conference tables 144″ wide. Each USB power module includes 1 USB-A and 1 USB-C port. USB power modules plug into an included plug strip with 6 simplex receptacles. Power strip with hardwired conduit has a metal housing. Corded version of power strip has a plastic housing.

Dimensions

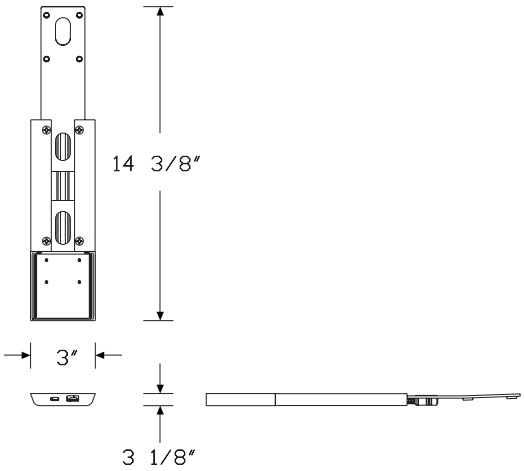

Specification Information

Step 1.

KUSBVC A		$1801

Step 2. Power Type

P	plug-in A	+$0
H	hardwired A	+$200

Step 3. Plug Strip Cord/Conduit Length

10	10′ cord/conduit A	+$0

Step 4. Finish

91	white A	+$0
BK	black A	+$0

Axon Conference Caddy KCAD-

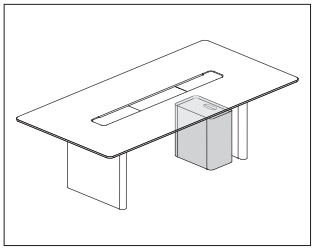

Product Information

Description

The Conference Caddy has a door with 2 hinges for main access and can be placed anywhere below or next to the table.

Notes

Dimensions are 11 3/4"D × 19 3/4"W × 21"H.

Order Conference Caddy separately from Axon™ table.

Dimensions

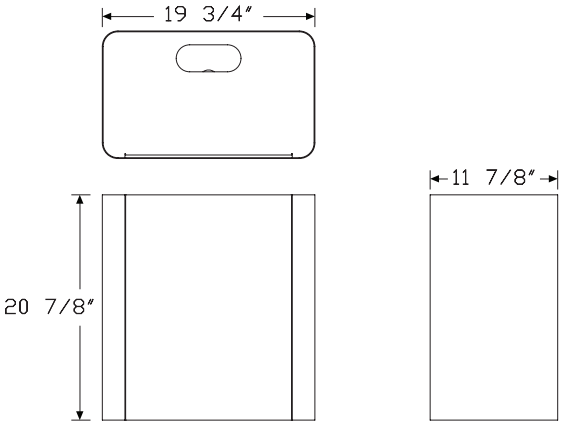

Specification Information

Step 1.

KCAD- A

Step 2. Depth

12	11-3/4" deep A	

Step 3. Width

20	19-3/4" wide A	

Step 4. Height

21	21" high A	

Prices for Steps 1-4.

		21
KCAD-	**12 20**	$1925

Step 5. Base Finish

8Q	folkstone grey A	+$0
91	white A	+$0
BK	black A	+$0

Index by Product Name

Desks and Tables	
Axon Cable Retractor Kit, for use in Trough	page(s) 53
Axon Conference Caddy	62
Axon Oval Power Module, Double	49
Axon Oval Power Module, Single	48
Axon rectangular table, glass top	15
Axon rectangular table, laminate top	18
Axon rectangular table, stone top	22
Axon rectangular table, wood top	26
Axon Round Power Module	50
Axon round table, glass top	5
Axon round table, laminate top	7
Axon round table, stone top	9
Axon round table, wood top	11
Axon Trough Power Module, Double	52
Axon Trough Power Module, Single	51
Axon USB modules, for video conference tables 96" wide	59
Axon USB modules, for video conference tables 108" to 132" wide	60
Axon USB modules, for video conference tables 144" wide	61
Axon USB Modules, set of 4	55
Axon USB Modules, set of 6	56
Axon USB Modules, set of 8	57
Axon USB Modules, set of 10	58
Axon video conference table, glass top	36
Axon video conference table, laminate top	38
Axon video conference table, stone top	41
Axon video conference table, wood top	43
Cable retractor kit, for use in C style base or conference caddy	54

Index by Product Number

KCAD-	Axon Conference Caddy	page(s) 62
KCRC-	Cable retractor kit, for use in C style base or conference caddy	54
KCRT-	Axon Cable Retractor Kit, for use in Trough	53
KPR1	Axon Round Power Module	50
KPT1	Axon Trough Power Module, Single	51
KPT2	Axon Trough Power Module, Double	52
KPV1	Axon Oval Power Module, Single	48
KPV2	Axon Oval Power Module, Double	49
KTCG-	Axon round table, glass top	5
KTCL-	Axon round table, laminate top	7
KTCS-	Axon round table, stone top	9
KTCW-	Axon round table, wood top	11
KTRG-	Axon rectangular table, glass top	15
KTRL-	Axon rectangular table, laminate top	18
KTRS-	Axon rectangular table, stone top	22
KTRW-	Axon rectangular table, wood top	26
KTVG-	Axon video conference table, glass top	36
KTVL-	Axon video conference table, laminate top	38
KTVS-	Axon video conference table, stone top	41
KTVW-	Axon video conference table, wood top	43
KUSB1	Axon USB Modules, set of 10	58
KUSB4	Axon USB Modules, set of 4	55
KUSB6	Axon USB Modules, set of 6	56
KUSB8	Axon USB Modules, set of 8	57
KUSBV	Axon USB modules, for video conference tables 96" wide	59
KUSBV	Axon USB modules, for video conference tables 108" to 132" wide	60
KUSBV	Axon USB modules, for video conference tables 144" wide	61

20-Day or Less/Assigned Lead-Time Order Information

20-Day or Less and Assigned Lead-Time Programs

20-day or less and assigned lead-time products are designed for established Herman Miller dealers with pre-approved credit.

Products are distributed from multiple manufacturing facilities across the United States. All products and options not designated by an Assigned Lead-Time icon A will ship in 20 business days or less after being acknowledged by Herman Miller. Products and options designated by an A are on the assigned lead-time program and will ship in 20 days, less than 20 days, or more than 20 days from order acknowledgement.

Ordering Procedure

Please place orders through Order Manager. If this is not available to you, place orders through mail or fax. Verbal purchase orders will not be accepted.

Order Entry fax number for Passage®, 5000 Series, and Meridian®
Filing and Storage: (616) 846 9236.
Order Entry fax number for all other products:
(616) 654 3085.

For more information, contact your Customer Care representative at: (866) 854 3048 EXT 3400.

Shipments and Delivery

Per Herman Miller Terms and Conditions.

Changes and Cancellation

Per Herman Miller Terms and Conditions.

For more information about our products and services or to see a list of dealers, please visit us at HermanMiller.com or call (800) 851 1196.

© 2019 Herman Miller, Inc., Zeeland, Michigan

Distribution Rights

Working together since 1956, Herman Miller and Vitra are the authentic sources of designs by Charles and Ray Eames, Alexander Girard, and George Nelson. All the designs shown in this book are protected by law. Herman Miller has obtained all rights to make and sell these designs. Also, Herman Miller holds exclusive worldwide manufacturing and distribution rights for these products with the following exceptions:

Charles and Ray Eames, George Nelson, and Alexander Girard—Worldwide distribution rights for furniture in all areas except Europe and the Middle East. For those areas, please contact Vitra.

Isamu Noguchi—Worldwide distribution rights for the Noguchi Rudder Table. Distribution rights for the Noguchi Table in North America and Central America only. For all other areas, please contact Vitra.

Magis—Exclusive distribution rights in the US and Canada. For all other areas, please contact Magis.

Mattiazzi—Exclusive distribution rights in the US and Canada. For all other areas, please contact Mattiazzi.

® HermanMiller, ⓗ, 3D Intelligent, AO, Action Office, Aeron, ArcSpan, Aside, Avall, Avive, Bubble Lamps, Canvas Office Landscape, Caper, Celle, Co/Struc, Daisyone, Distil, Eames, Eco-Dematerialized, Embody, Envelop, Equa 2, Ergon 3, Ethospace, Exclave, Fine-Tune, FlexFront, Flo, Formcoat, Formwork, Ground Cloth, Herman Miller for the Home, Herman Miller for Healthcare, Intersect, Kinemat, Lapjack, Layout Studio, Lifework, Limerick, Live Unframed, Living Office, Locale, Maharam, Meridian, Mirra, Motia, Passage, Pellicle, Perspectives, Plex, PostureFit, Public Office Landscape, Resolve, Rodney, Sayl, Setu, Thrive, Tu, Wishbone, and Y-Tower are among the registered trademarks of Herman Miller, Inc., and its owned subsidiaries.

™ 8Z Pellicle, About Face, AireWeave, Albert, Backfit, Bubbletack, Burdick Group, Butterfly Back, Celeste, Cellular Suspension, Clam, Compass, Connect, Cosm, Cubert, DOT, Duracare, Durawrap, Eames Soft Pad, EnhancedAccess, Everywhere, Flex-Edge, Flute, Harmonic, Herman Miller Select, Hopsak 2, Intent, Iota, Jaw, Keyless Entry, Keyn Chair Group by Herman Miller, Latitude, Lino, Locale, Logic Mini, Logic Power Access Solutions, Live Platform, Loop, Lyris, Lyris 2, Made-to-Measure Storage, Metaform Portfolio, Mora, Multiscrim, Nelson, Nevi, Overlay, Pari, Pixelated Support, PostureFit SL, Prospect, Q, Renew, Sense, Soft Pad, Stackable, Stackable Storage, Striad, Swoop, Tone, TriFlex, Twist, Ubi, Verus, Vista and Wireframe are among the trademarks of Herman Miller, Inc., and its owned subsidiaries.

SM Herman Miller Options is among the service marks of Herman Miller, Inc.

AAP™ is a trademark of Extron Electronics.

Alexander Girard® is a registered trademark of The Alexander Girard Estate.

Chemsurf® is a registered trademark of Wilsonart International.

Corian® is a registered trademark of E. I. du Pont de Nemours and Company Corporation.

Crypton® is a registered trademark of Crypton, Inc.

DACRON® is a registered trademark of INVISTA S.a r.l.

Decora® is a registered trademark of Leviton Manufacturing Co., Inc.

Edelman® Leather is a registered trademark of Edelman Leather, Inc.

Extron® is a registered trademark of RGB Systems, Inc.

FENIX NTM® is a registered trademark of Arpa Industriale S.p.A.

FLEXNET™ is a trademark of Milliken & Company.

Floor Saver Glide® is a registered trademark of Carpin Manufacturing, Inc.

Geiger® is a registered trademark, and Bumper™, Saiba™, and Ward Bennett™ are trademarks, of Geiger International.

Goetz™ is a trademark of Mark W. Goetz.

Hang-It-All® is a registered trademark of Lucia Eames Demetrios, d.b.a. Eames Office.

Holophane® is a registered trademark of Holophane.

Ingeo™ is a trademark of Cargill Dow LLC.

iPad® is a registered trademark of Apple, Inc.

Leviton® is a registered trademark of Leviton Manufacturing Co., Inc.

LifeSize® is a registered trademark of LifeSize Communications, Inc.

Magis®, Bombo®, and Me Too® are registered trademarks of Magis S.p.A.

Microsoft® and Natural® Keyboard are registered trademarks of Microsoft Corporation.

Noguchi® and the Noguchi table configuration (trade dress) are registered trademarks, and Rudder Table™ is a trademark, of The Isamu Noguchi Foundation and Garden Museum.

Place Textiles® is a registered trademark of Place Textiles.

SuperSeat™ is a trademark of Dahti Seating, a division of ITW.