Complementary Furniture Assembly Instructions

1998750 Revision A-06
Complete Series Master Packet

Proper product installation, in accordance with these instructions, is the responsibility of the installing agent.
If you have any questions concerning these instructions, please call Kimball Office Customer Care.

© 2006 Kimball International, Inc. T 800.482.1818 F 812.482.8300

Pedestal Drawer Removal

Tools Required

- None

Package Contents

- None

Installation

1. Extend the box or file drawer to its full extension. Locate the drawer slide release tab, in the approximate location shown, on each side of the drawer box. Press tabs in and pull drawer straight out until slide drawer members disengage from cabinet members. (Figure A).
   Note: *Lateral file drawer fronts use six (6) screws.*
2. To reinstall drawer, extend slide cabinet members.
   Note: *Make sure chrome ball bearing member is also forward. Carefully align slide drawer members with cabinet members and gently push drawer closed. Check for proper alignment by inspecting drawer front margins for spacing and squareness.*

Figure A

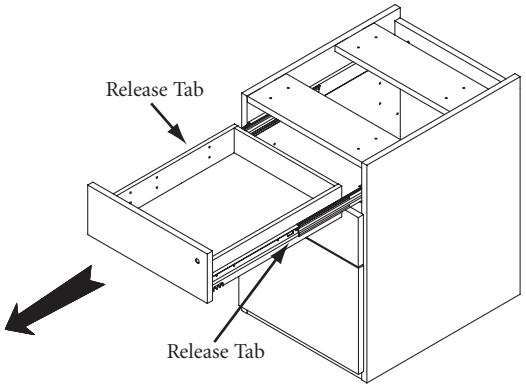

Printed in U.S.A. © 2005 Kimball International, Inc. T 800.482.1818 F 812.482.8300

Complementary Furniture

Shelf Adjustment

Tools Required

- Phillips Screwdriver

Package Contents

- None

Installation

1. An adjustable shelf consists of a shelf and four (4) shelf support brackets. (Figure A).
2. Units are shipped with the adjustable shelves fastened in position. To remove/adjust a shelf, remove the four (4) #8 x ⅝" panhead screws from the underside of the shelf. (Figure B).

Figure A

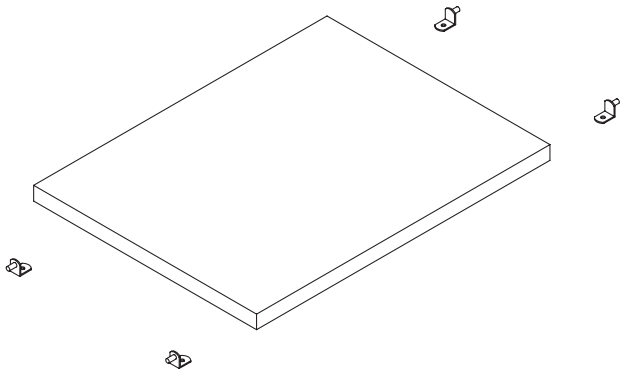

Figure B

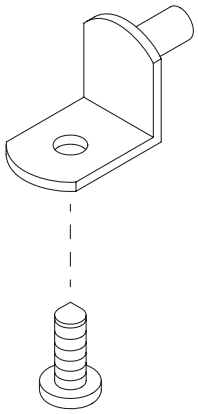

Printed in U.S.A. © 2005 Kimball International, Inc. T 800.482.1818 F 812.482.8300

Proper product installation, in accordance with these instructions, is the responsibility of the installing agent. If you have any questions concerning these instructions, please call Kimball Office Customer Service.

Kimball Office

Complementary Furniture

Leveling

Tools Required

- 7/32" Nut Driver
- Level

Package Contents

- None

Installation

Note: *All floor units* ***MUST*** *be leveled as described below for appearance and proper function of doors and drawers.*

1. Remove all drawers as required for access to leveling glide adjustment holes.
   Note: *To remove drawers, refer to the Pedestal Drawer Removal Assembly Instruction sheet.*
   Credenzas and Vertical Storage: Turn the glides fully "in" (counterclockwise) prior to leveling. Level the unit from front to back by extending the glides (turn clockwise). Level the unit from side to side. Check adjustments by placing the level in the four positions shown. (Figures A and B).

Figure A

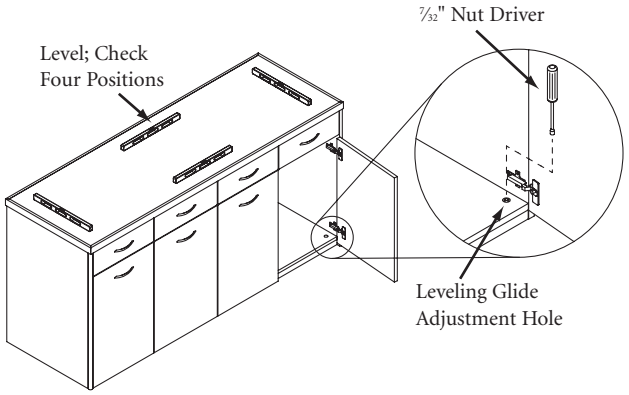

Figure B

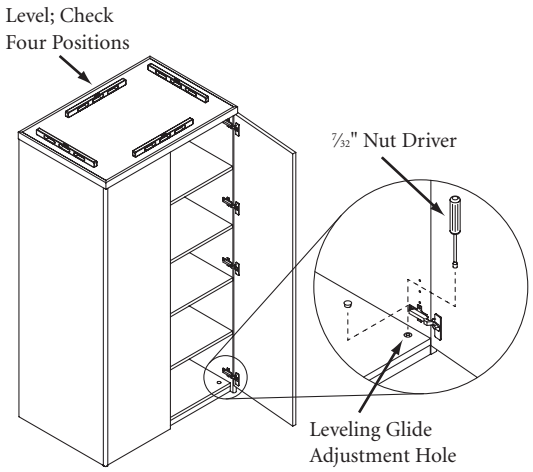

Printed in U.S.A. © 2005 Kimball International, Inc. T 800.482.1818 F 812.482.8300

Proper product installation, in accordance with these instructions, is the responsibility of the installing agent. If you have any questions concerning these instructions, please call Kimball Office Customer Service.

Kimball Office

Complementary Furniture

Hinge Adjustment

Tools Required

- Phillips Screwdriver

Package Contents

- None

Installation

1. **Side Adjustment:**
   Turn front screw clockwise to increase door overlay, counterclockwise to decrease overlay. (Figure A).
2. **Depth Adjustment:**
   Loosen back screw. Adjust door to desired position and re-tighten screw. (Figure B).
3. **Height Adjustment:**
   Loosen screw(s) on the mounting plate. Adjust door to position and tighten screws. (Figure C).
4. **Door Removal and Installation:**
   To remove, pull release lever back. (Figure D). To re-install, place the hinge on the mounting plate and push the hinge with finger pressure. The snap sound confirms a secure attachment.

Figure A

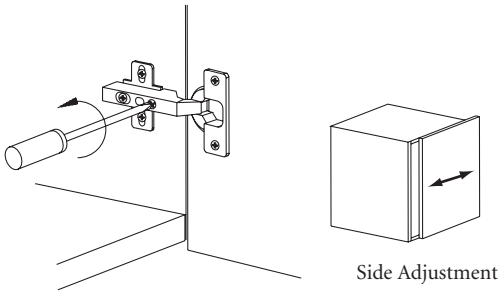

Side Adjustment

Figure B

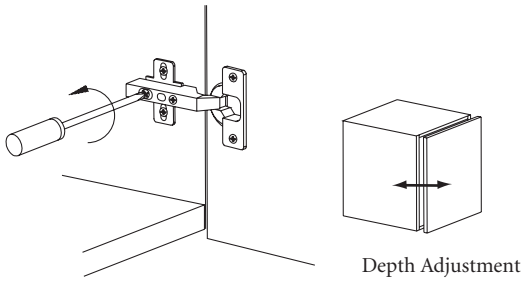

Depth Adjustment

Figure C

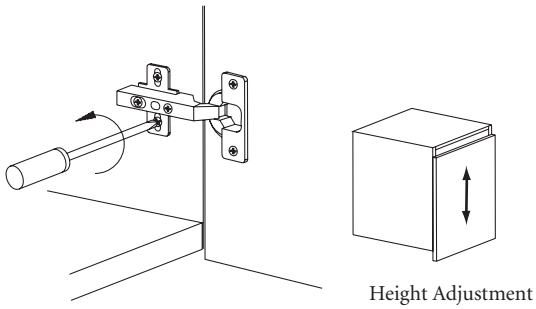

Height Adjustment

Figure D

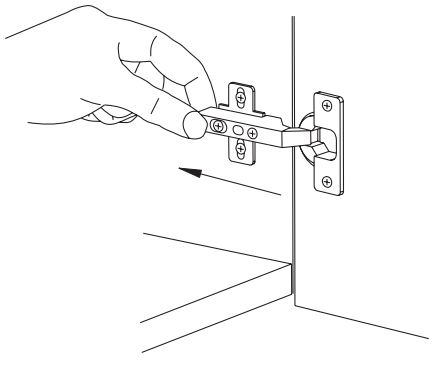

Removal

Printed in U.S.A. © 2005 Kimball International, Inc. T 800.482.1818 F 812.482.8300

Proper product installation, in accordance with these instructions, is the responsibility of the installing agent. If you have any questions concerning these instructions, please call Kimball Office Customer Service.

Kimball® Office

Complementary Furniture

Visual Board with Doors
Visual Board without Doors

Tools Required

- Level
- #2 Phillips Head Bit
- Power Screwdriver
- Tape Measure
- Pencil
- Required Mounting Screws (responsibility of installer)

Package Contents

- 1 Visual Board Slide Assembly
- 2 Visual Board Doors (if applicable)
- 2 #8 x 2" Wood Screws
- 8 Thumbscrews (if applicable)

Installation

1. The Visual Board is mounted by the installer to a structural wall. The Visual Board comes with or without doors. (Figure A).
2. Place Visual Board against wall in the approximate desired location. Mark the height of the top edge of the Visual Board and set the board aside. Measure down 8 5/32" from this mark and draw a level line. (Figure B).
3. The wall hanger boards are attached to the back of the unit. The upper hanger board should remain on the unit. The lower wall hanger board attached to the center of the unit is tacked on for shipping purposes only. Remove the lower wall hanger board from the unit. (Figure C).

Figure A

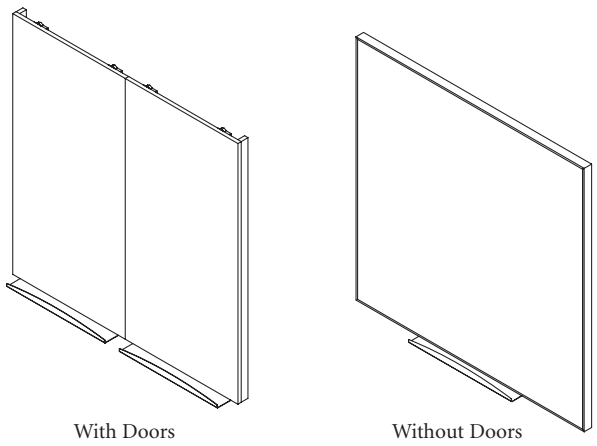

Figure B

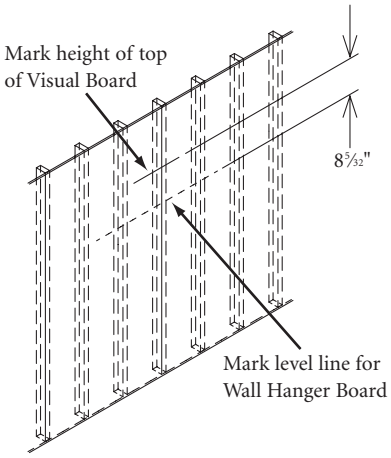

Figure C

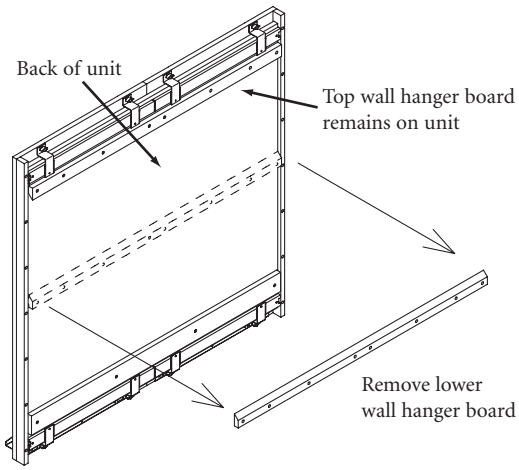

Proper product installation, in accordance with these instructions, is the responsibility of the installing agent. If you have any questions concerning these instructions, please call Kimball Office Customer Service.

Kimball Office

Complementary Furniture

Installation (continued)

4. The lower wall hanger board must be firmly attached to the structural wall, and should be attached to three (3) wall studs. Countersink or counterbore each attachment screw hole so that the screws will be flush or below the surface of the hanger board. (Figure D).
   Note: *Make sure hanger board is level.*
5. If unit has doors, place the doors face down on a smooth, hard, clean surface. Attach the Visual Board slide assembly to the doors using the provided thumbscrews. The thumbscrews insert through the over-sized holes in the slide brackets and thread into the inserts in the back of the doors. (Figure E).
6. Carefully position the Visual Board on the wall hanger board, making sure hanger rail on back of Visual Board fully engages the wall hanger board. (Figure F).

Figure D

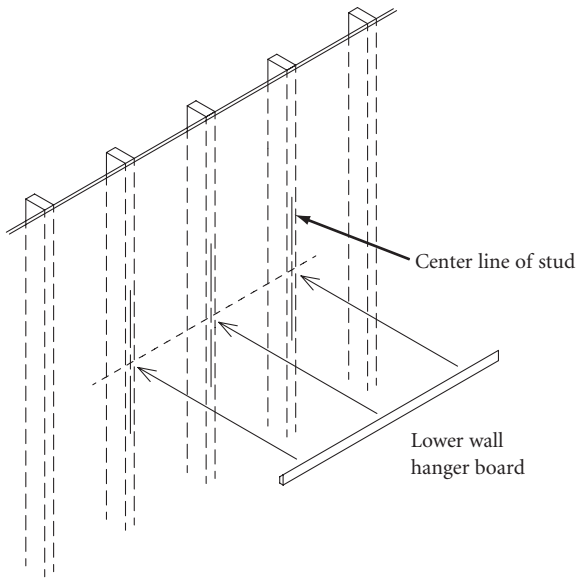

Figure E

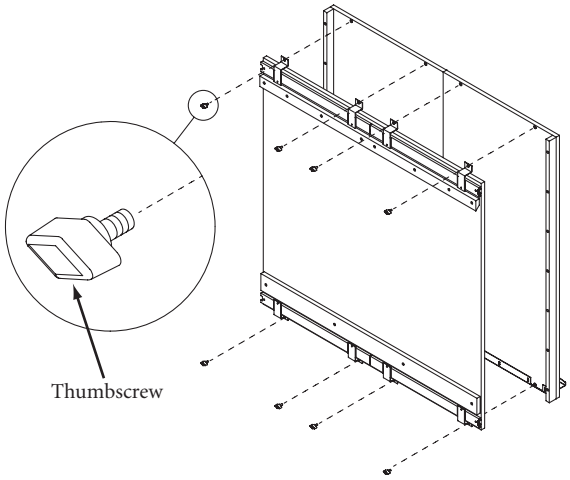

Figure F

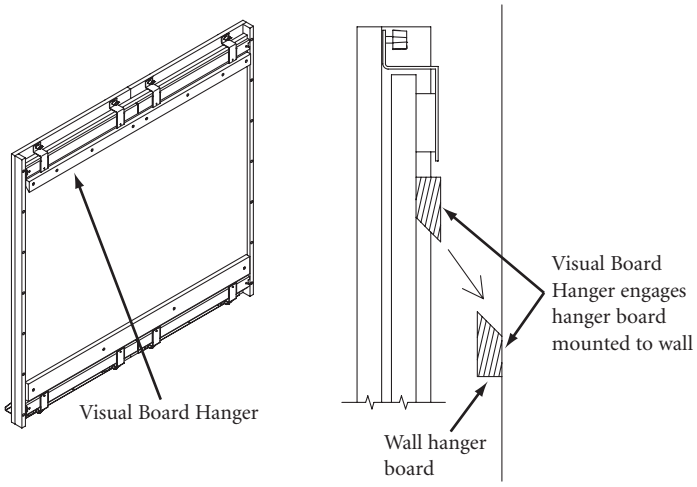

Proper product installation, in accordance with these instructions, is the responsibility of the installing agent. If you have any questions concerning these instructions, please call Kimball Office Customer Service.

Kimball Office

Complementary Furniture

Installation (continued)

7. To prevent accidental dislodgment of the Visual Board from the wall, be sure to install the provided wall brackets. With the Visual Board doors in the open position, place each wall bracket (long, flat side against the wall) over a wall stud and slide each bracket down until the short flange rests on the Visual Board hanger rail. Attach each wall bracket to a wall stud using a provided #8 x 2" wood screw inserted through the mounting hole in the bracket. (Figure G).
8. If unit has doors, alignment can be accomplished by loosening the door thumbscrews, adjusting the doors, and firmly re-tightening the thumbscrews. (Figure H).

Figure G

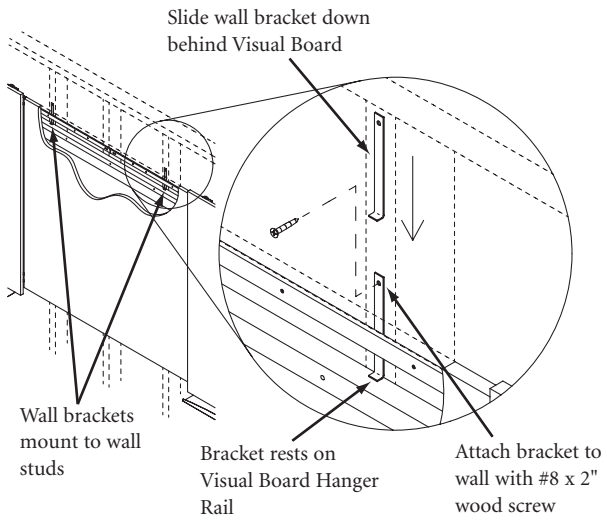

Figure H

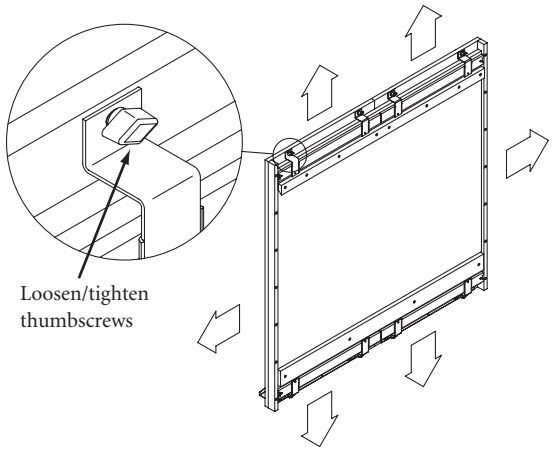

Printed in U.S.A. © 2005 Kimball International, Inc. T 800.482.1818 F 812.482.8300

Proper product installation, in accordance with these instructions, is the responsibility of the installing agent. If you have any questions concerning these instructions, please call Kimball Office Customer Service.

Kimball Office

Lock Core Installation

Tools Required

- None

Package Contents

- Lock Core/Key
  (key may be either rectangular or round head)

Installation

1. The key is pre-inserted into the lock core. Do not remove the key prior to lock core installation. (Figure A).
2. Prior to inserting the lock core/key be sure that the lock tenon on the end of the lock core is aligned with the cutout at the back of the drawer/door lock housing. (Figure B).
3. To install the lock core, angle the core slightly so that the raised wafer (Figure B) can be inserted into the lock housing. When the wafer is inside the housing, straighten the core and push in firmly to fully seat the core in the lock housing. (Figure C).
4. The lock core will only seat properly when the lock tenon and housing cutout are correctly aligned. You will not be able to remove the key if the core is not fully engaged and properly seated in the housing. (Figure D).
   Note: *Future removal of lock cores require a yellow Change Key, ordered separately.*

Figure A

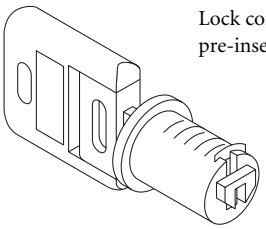

Figure B

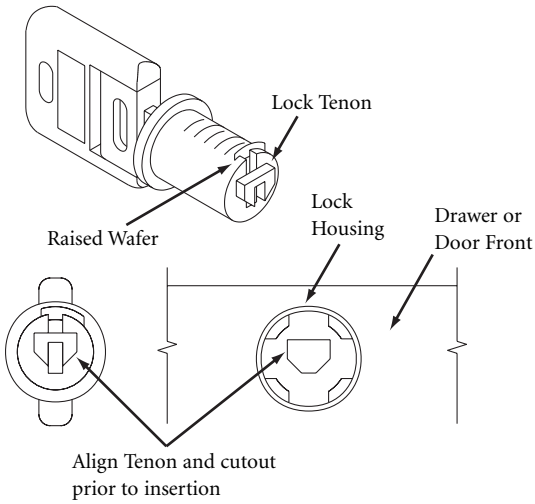

Figure C

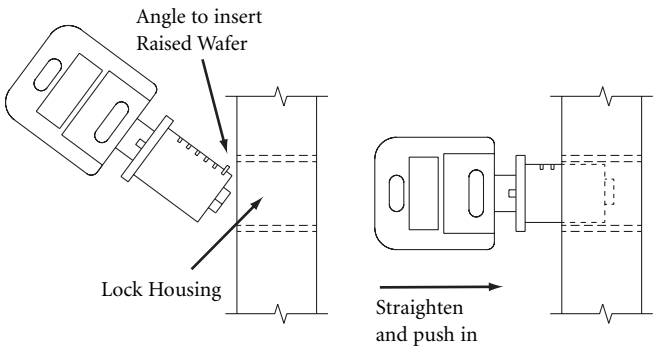

Figure D

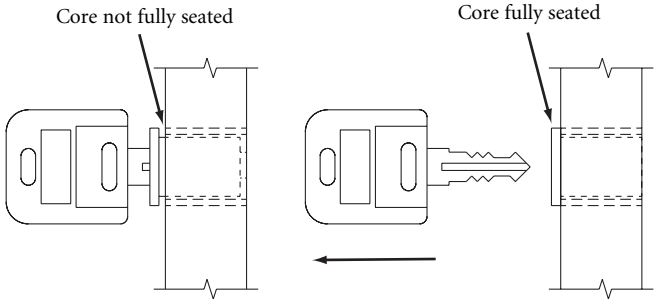

Printed in U.S.A. © 2004 Kimball International, Inc. T 800.482.1818 F 812.482.8300

Proper product installation, in accordance with these instructions, is the responsibility of the installing agent. If you have any questions concerning these instructions, please call Kimball Office Customer Care.

Kimball Office