Prices effective January 7, 2019

Published April 2019

Layout Studio®

Introduction	**page 2**
Layout Studio®	**3**
Performance Rail	
Infrastructure	5
Power & Wire Management	26
Surfaces	42
Screens	51
Storage	69
No Rail	
Infrastructure	82
Power & Wire Management	103
Surfaces	118
Screens	137
Hardware	170
Indices	**173**
By Name	173
By Number	175
Appendices	
20-Day or Less/Assigned Lead-Time Order Information	
Stain-to-Match Program	
Customer's Own Material Order Information-Workspaces	
Proprietary Textiles Application Chart-Workspaces	
Proprietary Textile Colors-Workspaces	

For the latest materials information, refer to the Materials pages on HermanMiller.com.

Introduction

A Note on the Organization of This Book

There are a few signals that will help you understand the organization of this book. Once you know them, you should be able to find your way around easily.

Like a newspaper, this book is formatted with columns of text and illustrations that run vertically.

Information wraps from one column to the next and continues for as many pages as it needs to.

Black bars are clues.

A black bar at the top of a page signals the start of information about a product.

This information is divided into two sections, each signaled by a black bar. Product Information includes a description, additional notes, and dimensional drawings. Specification Information, which always begins at the top of a column, includes a series of steps. Each step represents a decision you need to make in order to complete your product number. Steps must be followed sequentially. The number of pages needed to complete information on a product varies; some will be complete in one page; others may fill three or four pages. Just continue going through the steps until you run into the next product, signaled by the black bar at the top of the page.

Black tabs running along the outside edge of the page help you locate what section you are in or what section you want to go to. You can thumb forwards or backwards to find a section; tabs and text appear on both sides of the page.

The additional pages in the back of the book include the appendices and indices. They are signaled by a long black bar running along the outside edge of the page.

The index is presented two ways.

The first index is in alphabetical order by product name. It can be helpful if you are new to the products and numbering scheme or if you are looking for a type of product, such as work chair or round table.
The second index is by product number. It lists, in alphanumeric order, the base product number, typically a five-digit number.

General Information

This book is effective January 7, 2019, subject to change without notice. Products may be purchased from authorized Herman Miller dealers who will quote prices upon request. For more information about our products and services or to see a list of dealers, visit www.HermanMiller.com.

All prices are list prices. Additional services, such as planning services, design, storage, and installation, are not included and must be added to these prices when the additional services are requested.

Illustrations, specifications, and prices are based on the latest information at the time of publication. The right is reserved to make changes at any time without notice in prices, fabrics, finishes, materials, specifications, and models, and also to discontinue models and finishes.

Dimensions shown in the drawings are engineering drawing dimensions rounded up to the nearest 1/8". Product is shipped set up or knocked down. Products that include "Shipped knocked down" in the description require some assembly. If this statement does not appear in the description, the product is shipped assembled.

Service problems are normally handled by a Herman Miller authorized dealer. Where this cannot be accomplished on a local level, service problems should be referred to the Customer Care Representative for your region, Herman Miller, Inc., Zeeland, Michigan 49464.

20-Day or Less/Assigned Lead-Time Shipments

All products and options in this price book not designated by an Assigned Program icon A will ship in **20 business days or less** after being acknowledged by Herman Miller.

Products and options designated by an A are on the assigned lead-time program and may ship in 20 days, less than 20 days, or more than 20 days from order acknowledgement.

Performance Rail

No Rail

Engage Leg, Desk End, Single, Performance Rail

GNLFEL
GNLFER

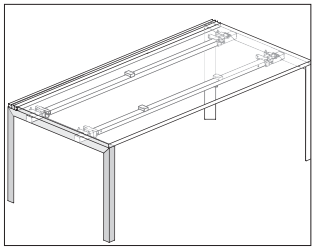

Product Information

Description

This single desk end leg provides support for an individual table or the end of a single-sided bench when using a performance rail. This fixed-height leg provides 1 3/4″ of leveling adjustment.

Notes

Size of leg must match depth of surface being supported.

Dimensions

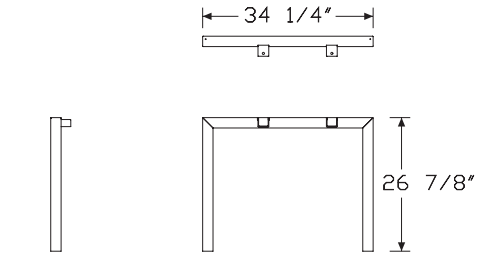

Engage Leg - Left

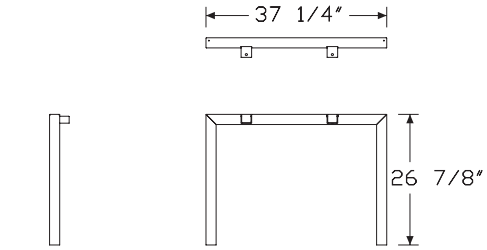

Engage Leg - Right

Specification Information

Step 1.

GN A

Step 2. Leg

LF fixed height A

Step 3. Application

EL.R left hand, for use with performance rail A
ER.R right hand, for use with performance rail A

Step 4. Size

24 24″ deep A
30 30″ deep A

Prices for Steps 1-4.

GNLFEL.R	**24**	$278
	30	$282
GNLFER.R	**24**	$278
	30	$282

Step 5. Leg Finish

91	white A	+$0
G1	graphite A	+$0
MS	metallic silver A	+$0

Engage Leg, Desk End, Double GNLFEN

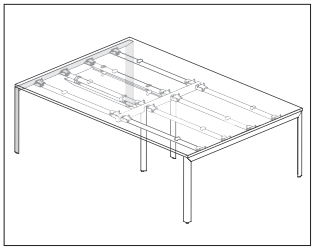

Product Information

Description

The double desk end leg provides support at either end of a back-to-back bench application, or a project table. This fixed height leg provides 1³/₄″ of leveling adjustment.

Notes

Size of the leg must match the combined depth of the 2 primary surfaces or 1 project table surface being supported.

Dimensions

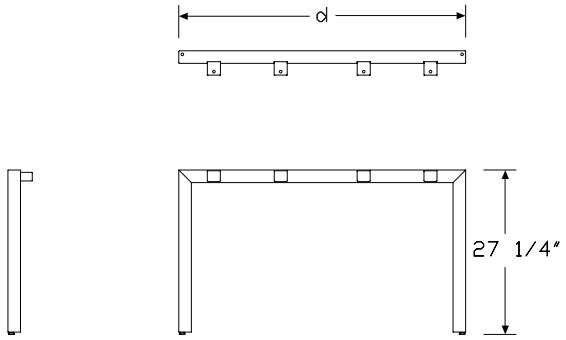

Specification Information

Step 1.

GN

Step 2. Leg Type

LF	fixed height

Step 3. Application

EN.	desk end double

Step 4. Depth

48	48″ deep
60	60″ deep
72	72″ deep

Prices for Steps 1-4.

GNLFEN.	**48**	$369
	60	$392
	72	$414

Step 5. Leg Finish

91	white	+$0
G1	graphite	+$0
MS	metallic silver	+$0

Engage Leg, Intermediate Desk, Performance Rail GNLFSN

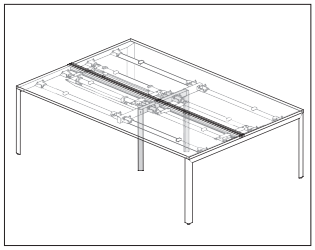

Product Information

Description

This intermediate desk leg provides support within a single-sided or back-to-back bench application when using a performance rail. This fixed-height leg provides 1¾″ of leveling adjustment.

Notes

Size of leg must match combined depth of surfaces being supported.

Dimensions

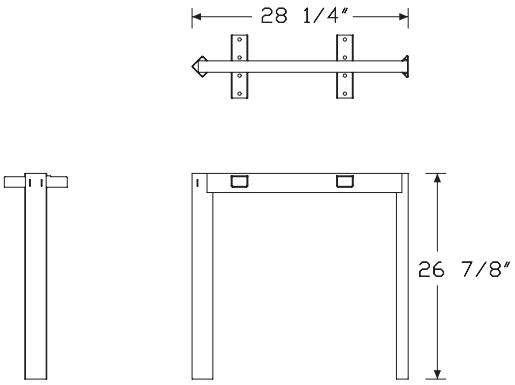

Specification Information

Step 1.

GN A

Step 2. Leg

LF fixed height A

Step 3. Application

SN.R intermediate desk with performance rail A

Step 4. Size

24 24″ deep A
30 30″ deep A
48 48″ deep A
60 60″ deep A

Prices for Steps 1-4.

GNLFSN.R	**24**	$302
	30	$307
	48	$387
	60	$403

Step 5. Leg Finish

91	white A	+$0
G1	graphite A	+$0
MS	metallic silver A	+$0

Engage Leg, Asymmetrical Desk End, Double

GNLFAL
GNLFAR

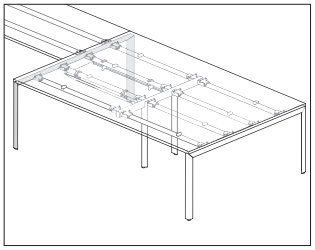

Product Information

Description

This leg supports an asymmetrical application, with a back-to-back application on 1 side of the leg and a single surface on the other side of the leg. It is fixed height, and provides 1¾″ of leveling adjustment.

Notes

Size of the leg must match the depth of the surfaces being supported.

Dimensions

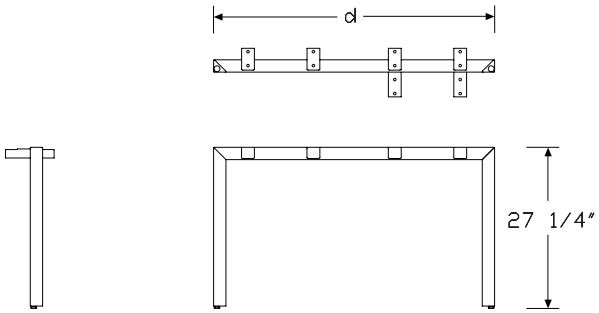

Left Hand

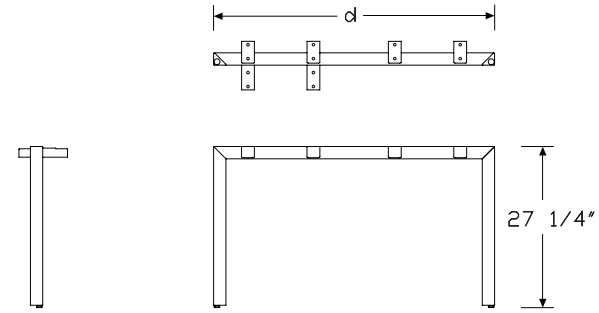

Right Hand

Specification Information

Step 1.

GN

Step 2. Leg Type

LF	fixed height

Step 3. Application

AL.	left hand
AR.	right hand

Step 4. Depth

48	48″ deep
60	60″ deep
72	72″ deep

Prices for Steps 1-4.

GNLFAL.	**48**	$395
	60	$418
	72	$435
GNLFAR.	**48**	$395
	60	$418
	72	$435

Step 5. Leg Finish

91	white	+$0
G1	graphite	+$0
MS	metallic silver	+$0

Engage Leg, Desk End, Double, Meeting End

GNLFPN

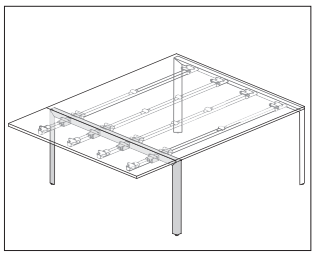

Product Information

Description

This leg supports the use of meeting end beams and surface at the end of a back-to-back bench.

Notes

Size of leg must match the combined depth of the 2 primary surfaces or 1 project table surface being supported.

Order meeting end beams (GNBM.) and surface (GNTDx.) separately.

Dimensions

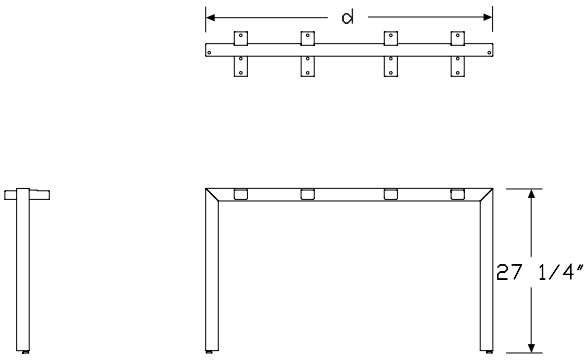

Specification Information

Step 1.

GN

Step 2. Leg Type

LF	fixed height

Step 3. Application

PN.	meeting end

Step 4. Depth

48	48" deep
60	60" deep
72	72" deep

Prices for Steps 1-4.

GNLFPN.	**48**	$385
	60	$429
	72	$462

Step 5. Leg Finish

91	white	+$0
G1	graphite	+$0
MS	metallic silver	+$0

Engage Leg, Back-to-Back Bracing Leg, Performance Rail GNLFBN

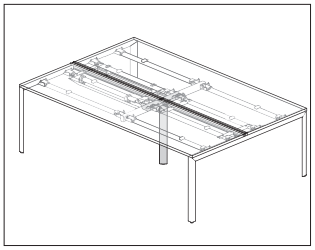

Product Information

Description

This seated-height stabilizer leg kit provides support within a back-to-back bench application with performance rail where no intermediate leg is being used. This fixed-height leg provides 1 3/4" of leveling adjustment.

Notes

This leg is only required in a back-to-back application with performance rail when no intermediate leg is being used.

Dimensions

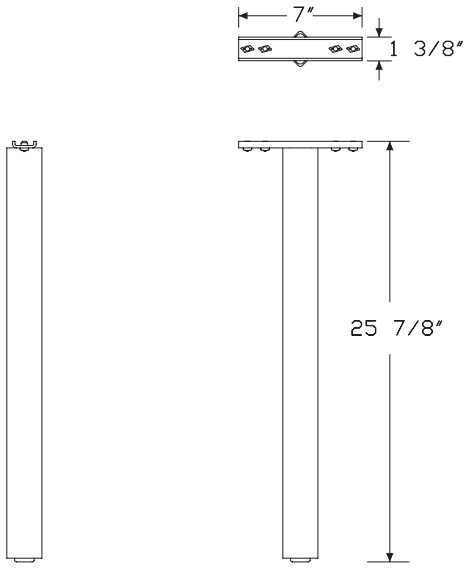

Specification Information

Step 1.

GN A

Step 2. Leg

LF	fixed height A	

Step 3. Application

BN.R	bracing leg for use with performance rail A	

Prices for Steps 1-3.

GNLFBN.R		$272

Step 4. Leg Finish

91	white A	+$0
G1	graphite A	+$0
MS	metallic silver A	+$0

Engage Leg, Standing End, Double — GNLSEN

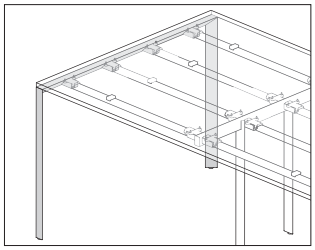

Product Information

Description

This double standing height end leg provides support at either end of a back-to-back bench or project table application. This fixed height leg provides 1 3/4″ of leveling adjustment.

Notes

Size of leg must match the combined depth of the 2 primary surfaces or 1 project table surface being supported.

Dimensions

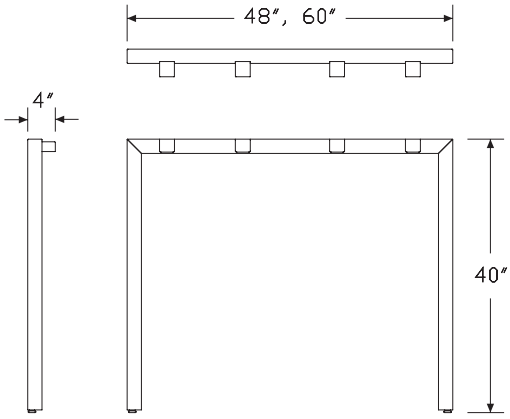

Specification Information

Step 1.

GN A

Step 2. Leg

LS standing height A

Step 3. Application

EN. desk end double A

Step 4. Size

48 48″ deep A
60 60″ deep A

Prices for Steps 1-4.

GNLSEN.	**48**	$536
	60	$569

Step 5. Leg Finish

91	white A	+$0
G1	graphite A	+$0
MS	metallic silver A	+$0

Engage Leg, Intermediate Standing — GNLSSN

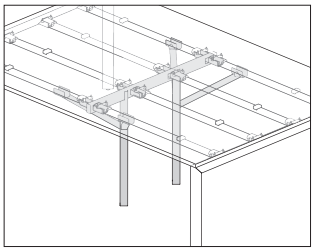

Product Information

Description

This intermediate standing height leg provides support in a back-to-back bench or project table application. This fixed height leg provides 1 3/4″ of leveling adjustment. Leg includes all bracing, structural supports, and hardware required for a standing height application.

Notes

Size of leg must match the combined depth of the 2 primary surfaces or 1 project table surface being supported.

Dimensions

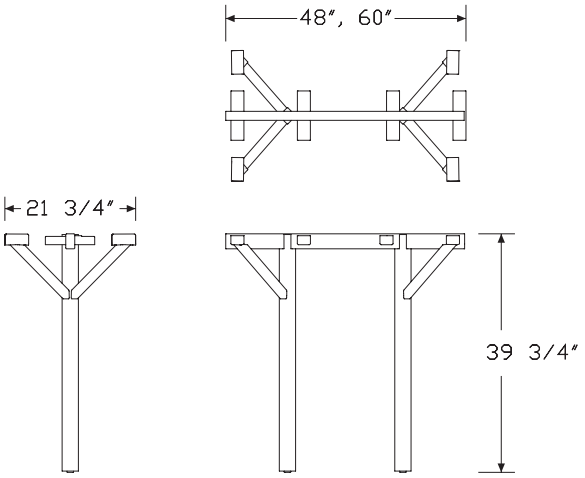

Specification Information

Step 1.

GN A

Step 2. Leg

LS standing height A

Step 3. Application

SN. intermediate A

Step 4. Size

48 48″ deep A
60 60″ deep A

Prices for Steps 1-4.

GNLSSN.	**48**	$880
	60	$913

Step 5. Leg Finish

91	white A	+$0
G1	graphite A	+$0
MS	metallic silver A	+$0

Engage Leg, Standing Back-to-Back Bracing Leg

GNLSBN

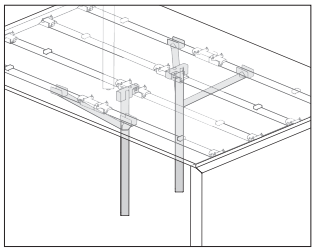

Product Information

Description

This standing height stabilizer leg kit provides support in a back-to-back bench or project table application where no intermediate leg is being used. This fixed height leg provides 1 3/4" of leveling adjustment. Leg includes all bracing, structural supports, and hardware required for a standing height application.

Notes

This leg is only used in standing height applications that have 1 beam width spanning between 2 end legs, or between 1 end leg and 1 end-of-run storage unit that supports the surface.

This leg can only be used with 42"-wide or wider beams.

Dimensions

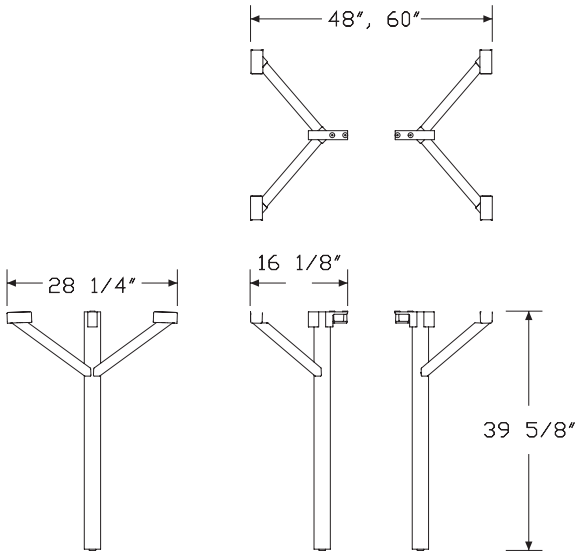

Specification Information

Step 1.

GN A

Step 2. Leg

LS standing height A

Step 3. Application

BN. bracing leg A

Step 4. Depth

48 48" deep application A

60 60" deep application A

Prices for Steps 1-4.

GNLSBN.	**48**	$823
	60	$839

Step 5. Leg Finish

91	white A	+$0
G1	graphite A	+$0
MS	metallic silver A	+$0

Closed Leg, Desk End, Single, Performance Rail

GNCFEL
GNCFER

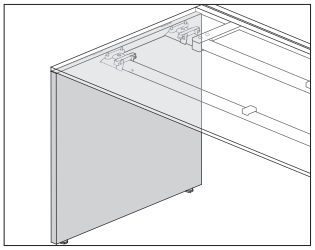

Product Information

Description

This single desk end leg provides support for an individual table or the end of a single-sided bench or return when using a performance rail. It has a laminate top and thermoplastic edge, laminate top with a thermoplastic backed plywood edge, or veneer top and edge. This fixed height leg provides 1 3/4″ of leveling adjustment.

Notes

Size of leg must match depth of surface being supported.

Top of leg will be under the attached surface.

Grain/pattern direction is vertical on veneer, wood grain laminates, and directional laminates.

Dimensions

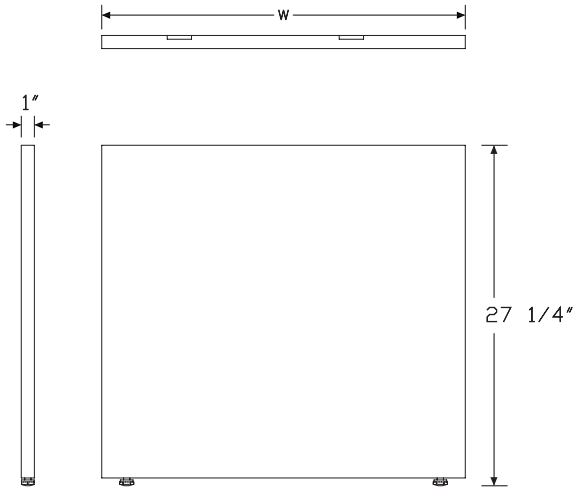

Specification Information

Step 1.

GN A

Step 2. Leg Type

CF fixed height A

Step 3. Application

EL.R left hand, for use with performance rail A

ER.R right hand, for use with performance rail A

Step 4. Size

24 24″ deep A

30 30″ deep A

Step 5. Material

L laminate top/thermoplastic edge A

U laminate top/universal edge A

W veneer A

Prices for Steps 1-5.

		L	U	W
GNCFEL.R	**24**	$377	377	753
	30	$395	395	788
GNCFER.R	**24**	$377	377	753
	30	$395	395	788

Step 6. Leg Finish

For laminate top/thermoplastic edge (L) or laminate top/universal edge (U)

76	light brown walnut A	+$0
8Q	folkstone grey A	+$0
91	white A	+$0
98	studio white A	+$0
CL	cool grey neutral A	+$0
HF	inner tone light A	+$0
HM	natural maple A	+$0
HP	light anigre A	+$0
HT	inner tone A	+$0
HX	aged cherry A	+$0
HY	walnut on cherry A	+$0
LA	light ash A	+$0
LBA	clear on ash A	+$0
LBR	phantom ecru A	+$0
LBS	phantom cocoa A	+$0

Closed Leg, Desk End, Single, Performance Rail *continued*

LBU	medium matte walnut A	+$0
LBV	warm grey teak A	+$0
LBB	oak on ash A	+$0
LBC	walnut on ash A	+$0
LBD	dark brown walnut A	+$0
LBE	medium red walnut A	+$0
LBF	neutral twill A	+$0
LBG	sarum twill A	+$0
LBH	earthen twill A	+$0
LBJ	graphite twill A	+$0
LBK	pewter mesh A	+$0
LBL	steel mesh A	+$0
LBM	crisp linen A	+$0
LBN	classic linen A	+$0
LBP	casual linen A	+$0
LBQ	white twill A	+$0
LM	mahogany A	+$0
LT	light tone A	+$0
LU	soft white A	+$0
MT	medium tone A	+$0
WL	sandstone A	+$0
WN	warm grey neutral A	+$0

Wood Veneer

For veneer (W)

2U	light brown walnut A	+$55
40	dark brown walnut A	+$55
ET	clear on ash A	+$55
EU	oak on ash A	+$55
EV	walnut on ash A	+$55

Step 7. Edge Finish

For laminate top/thermoplastic edge (L)

76	light brown walnut A	+$0
8Q	folkstone grey A	+$0
8Z	neutral grey A	+$0
91	white A	+$0
98	studio white A	+$0
BU	black umber A	+$0
CL	cool grey neutral A	+$0
HF	inner tone light A	+$0
HM	natural maple A	+$0
HP	light anigre A	+$0
HT	inner tone A	+$0
HX	aged cherry A	+$0
HY	walnut on cherry A	+$0
JB	millwork cherry A	+$0
LA	light ash A	+$0
LBA	clear on ash A	+$0
LBR	phantom ecru A	+$0
LBS	phantom cocoa A	+$0
LBU	medium matte walnut A	+$0
LBV	warm grey teak A	+$0
LBB	oak on ash A	+$0
LBC	walnut on ash A	+$0
LBD	dark brown walnut A	+$0
LBE	medium red walnut A	+$0
LBF	neutral twill A	+$0
LBG	sarum twill A	+$0
LBH	earthen twill A	+$0
LBJ	graphite twill A	+$0
LBK	pewter mesh A	+$0
LBL	steel mesh A	+$0
LBM	crisp linen A	+$0
LBN	classic linen A	+$0
LBP	casual linen A	+$0
LBQ	white twill A	+$0
LU	soft white A	+$0
MT	medium tone A	+$0
WL	sandstone A	+$0
WN	warm grey neutral A	+$0

For laminate top/universal edge (U)

PLY	plywood edge A	+$50

Step 8. Bracket Finish

Finish

91	white A	+$0
G1	graphite A	+$0
MS	metallic silver A	+$0

Closed Leg, Desk End, Double GNCFEN

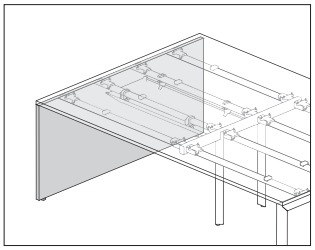

Product Information

Description

This double desk end leg provides support at either end of a back-to-back bench application or project table. It has a laminate top and thermoplastic edge, laminate top with a thermoplastic backed plywood edge, or veneer top and edge. This fixed height leg provides 1¾″ of leveling adjustment.

Notes

Size of leg must match the combined depth of the 2 primary surfaces or 1 project table surface being supported.

Top of leg will be under the attached surface.

Grain/pattern direction is vertical on veneer, wood grain laminates, and directional laminates.

Dimensions

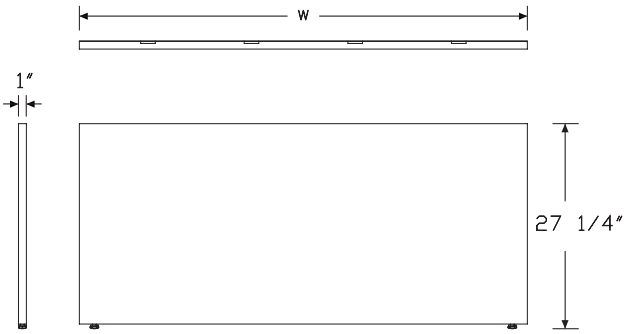

Specification Information

Step 1.

GN A

Step 2. Leg Type

CF fixed height A

Step 3. Application

EN. desk end double A

Step 4. Size

48 48″ deep A
60 60″ deep A

Step 5. Material

L laminate top/thermoplastic edge A
U laminate top/universal edge A
W veneer A

Prices for Steps 1-5.

		L	U	W
GNCFEN.	**48**	$578	578	1154
	60	$665	665	1329

Step 6. Leg Finish

For laminate top/thermoplastic edge (L) or laminate top/universal edge (U)

1X	vanilla A	+$0
76	light brown walnut A	+$0
8Q	folkstone grey A	+$0
91	white A	+$0
98	studio white A	+$0
CL	cool grey neutral A	+$0
HF	inner tone light A	+$0
HM	natural maple A	+$0
HP	light anigre A	+$0
HT	inner tone A	+$0
HX	aged cherry A	+$0
HY	walnut on cherry A	+$0
LA	light ash A	+$0
LBA	clear on ash A	+$0
LBR	phantom ecru A	+$0
LBS	phantom cocoa A	+$0
LBU	medium matte walnut A	+$0
LBV	warm grey teak A	+$0
LBB	oak on ash A	+$0

Closed Leg, Desk End, Double

continued

LBC	walnut on ash A	+$0
LBD	dark brown walnut A	+$0
LBE	medium red walnut A	+$0
LBF	neutral twill A	+$0
LBG	sarum twill A	+$0
LBH	earthen twill A	+$0
LBJ	graphite twill A	+$0
LBK	pewter mesh A	+$0
LBL	steel mesh A	+$0
LBM	crisp linen A	+$0
LBN	classic linen A	+$0
LBP	casual linen A	+$0
LBQ	white twill A	+$0
LM	mahogany A	+$0
LT	light tone A	+$0
LU	soft white A	+$0
MT	medium tone A	+$0
WL	sandstone A	+$0
WN	warm grey neutral A	+$0

Wood Veneer

For veneer (W)

2U	light brown walnut A	+$55
40	dark brown walnut A	+$55
ET	clear on ash A	+$55
EU	oak on ash A	+$55
EV	walnut on ash A	+$55

Step 7. Edge Finish

For laminate top/thermoplastic edge (L)

76	light brown walnut A	+$0
8Q	folkstone grey A	+$0
8Z	neutral grey A	+$0
91	white A	+$0
98	studio white A	+$0
BU	black umber A	+$0
CL	cool grey neutral A	+$0
HF	inner tone light A	+$0
HM	natural maple A	+$0
HP	light anigre A	+$0
HT	inner tone A	+$0
HX	aged cherry A	+$0
HY	walnut on cherry A	+$0
JB	millwork cherry A	+$0
LA	light ash A	+$0
LBA	clear on ash A	+$0
LBR	phantom ecru A	+$0
LBS	phantom cocoa A	+$0
LBU	medium matte walnut A	+$0
LBV	warm grey teak A	+$0
LBB	oak on ash A	+$0
LBC	walnut on ash A	+$0
LBD	dark brown walnut A	+$0
LBE	medium red walnut A	+$0
LBF	neutral twill A	+$0
LBG	sarum twill A	+$0
LBH	earthen twill A	+$0
LBJ	graphite twill A	+$0
LBK	pewter mesh A	+$0
LBL	steel mesh A	+$0
LBM	crisp linen A	+$0
LBN	classic linen A	+$0
LBP	casual linen A	+$0
LBQ	white twill A	+$0
LU	soft white A	+$0
MT	medium tone A	+$0
WL	sandstone A	+$0
WN	warm grey neutral A	+$0

For laminate top/universal edge (U)

PLY	plywood edge A	+$50

Step 8. Bracket Finish

Finish

91	white A	+$0
G1	graphite A	+$0
MS	metallic silver A	+$0

Closed Leg, Standing End, Double GNCSEN

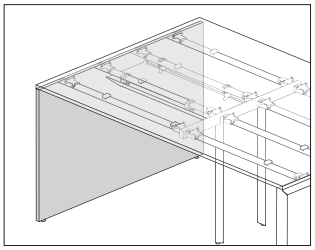

Product Information

Description

This double standing height end leg provides support at either end of a back-to-back bench application or project table. It has a laminate top and thermoplastic edge, laminate top with a thermoplastic backed plywood edge, or veneer top and edge. This fixed height leg provides 1 3/4″ of leveling adjustment.

Notes

Size of leg must match the combined depth of the 2 primary surfaces or 1 project table surface being supported.

Top of leg will be under the attached surface.

Grain/pattern direction is vertical on veneer, wood grain laminates, and directional laminates.

Dimensions

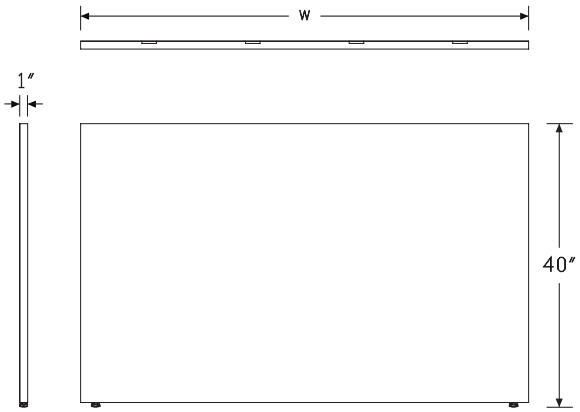

Specification Information

Step 1.

GN A

Step 2. Leg Type

CS standing height A

Step 3. Application

EN. desk end double A

Step 4. Size

48 48″ deep A

60 60″ deep A

Step 5. Material

L laminate top/thermoplastic edge A

U laminate top/universal edge A

W veneer A

Prices for Steps 1-5.

		L	U	W
GNCSEN.	**48**	$746	746	1493
	60	$863	863	1725

Step 6. Leg Finish

For laminate top/thermoplastic edge (L) or laminate top/universal edge (U)

76	light brown walnut A	+$0
8Q	folkstone grey A	+$0
91	white A	+$0
98	studio white A	+$0
CL	cool grey neutral A	+$0
HF	inner tone light A	+$0
HM	natural maple A	+$0
HP	light anigre A	+$0
HT	inner tone A	+$0
HX	aged cherry A	+$0
HY	walnut on cherry A	+$0
LA	light ash A	+$0
LBA	clear on ash A	+$0
LBR	phantom ecru A	+$0
LBS	phantom cocoa A	+$0
LBU	medium matte walnut A	+$0
LBV	warm grey teak A	+$0
LBB	oak on ash A	+$0
LBC	walnut on ash A	+$0

Closed Leg, Standing End, Double

continued

LBD	dark brown walnut A	+$0
LBE	medium red walnut A	+$0
LBF	neutral twill A	+$0
LBG	sarum twill A	+$0
LBH	earthen twill A	+$0
LBJ	graphite twill A	+$0
LBK	pewter mesh A	+$0
LBL	steel mesh A	+$0
LBM	crisp linen A	+$0
LBN	classic linen A	+$0
LBP	casual linen A	+$0
LBQ	white twill A	+$0
LM	mahogany A	+$0
LT	light tone A	+$0
LU	soft white A	+$0
MT	medium tone A	+$0
WL	sandstone A	+$0
WN	warm grey neutral A	+$0

Wood Veneer

For veneer (W)

2U	light brown walnut A	+$55
40	dark brown walnut A	+$55
ET	clear on ash A	+$55
EU	oak on ash A	+$55
EV	walnut on ash A	+$55

Step 7. Edge Finish

For laminate top/thermoplastic edge (L)

76	light brown walnut A	+$0
8Q	folkstone grey A	+$0
8Z	neutral grey A	+$0
91	white A	+$0
98	studio white A	+$0
BU	black umber A	+$0
CL	cool grey neutral A	+$0
HF	inner tone light A	+$0
HM	natural maple A	+$0
HP	light anigre A	+$0
HT	inner tone A	+$0
HX	aged cherry A	+$0
HY	walnut on cherry A	+$0
JB	millwork cherry A	+$0
LA	light ash A	+$0
LBA	clear on ash A	+$0
LBR	phantom ecru A	+$0
LBS	phantom cocoa A	+$0
LBU	medium matte walnut A	+$0
LBV	warm grey teak A	+$0
LBB	oak on ash A	+$0
LBC	walnut on ash A	+$0
LBD	dark brown walnut A	+$0
LBE	medium red walnut A	+$0
LBF	neutral twill A	+$0
LBG	sarum twill A	+$0
LBH	earthen twill A	+$0
LBJ	graphite twill A	+$0
LBK	pewter mesh A	+$0
LBL	steel mesh A	+$0
LBM	crisp linen A	+$0
LBN	classic linen A	+$0
LBP	casual linen A	+$0
LBQ	white twill A	+$0
LU	soft white A	+$0
MT	medium tone A	+$0
WL	sandstone A	+$0
WN	warm grey neutral A	+$0

For laminate top/universal edge (U)

PLY	plywood edge A	+$50

Step 8. Bracket Finish

91	white A	+$0
G1	graphite A	+$0
MS	metallic silver A	+$0

Beams, Rectangular Primary GNBR.

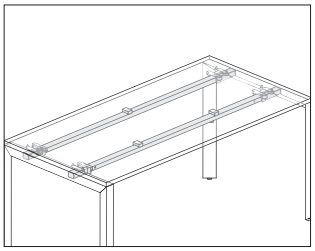

Product Information

Description

This pair of beams connects to end, asymmetrical, and intermediate Engage legs, and is required for the support of rectangular primary surfaces. Beams also provide attachment and support for cable management, screens, and other elements. Attachment hardware packs ordered separately.

Notes

To connect beams to fixed surfaces and legs, order hardware pack (GNHPF.). To connect beams to sliding surfaces and legs, use generic hardware pack (GNHRS.) when using primary sliding surfaces (GNTRD., GNTRF., GNTRG., GNTRN.) with generic (G) attachment option or primary performance rail surfaces (GNTRR.) only. Use hardware pack, sliding (GNHPS.) when using legacy surfaces specified as sliding attachment only.

Dimensions

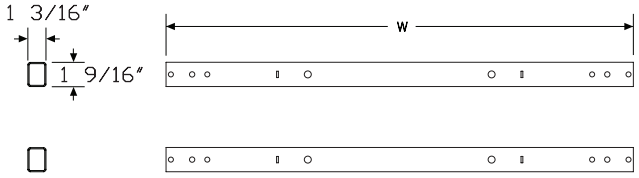

Specification Information

Step 1.

GNBR.

Step 2. Width

36	36″ wide
42	42″ wide
48	48″ wide
54	54″ wide
60	60″ wide
66	66″ wide
72	72″ wide
78	78″ wide A
84	84″ wide A
96	96″ wide A

Prices for Steps 1-2.

GNBR.	**36**	$90
	42	$95
	48	$100
	54	$145
	60	$130
	66	$181
	72	$159
	78	$222
	84	$233
	96	$250

Step 3. Finish

CL	cool grey neutral	+$0
91	white	+$13
G1	graphite	+$13

Beams, Meeting End GNBM.

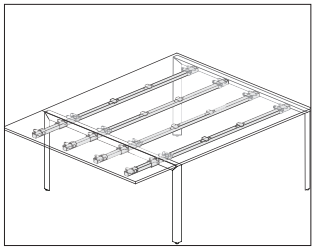

Product Information

Description

This pair of beams connects to a meeting end and intermediate Engage legs, and is required when specifying a meeting end surface across the end of a back-to-back configuration. Beams also provide attachment and support for cable management, screens, and other elements. Attachment hardware packs ordered separately.

Notes

Specify beam size to match the width of the adjacent rectangular primary surface.

To connect beams to fixed surfaces and legs, order hardware pack (GNHPF.). To connect beams to sliding surfaces and legs, use generic hardware pack (GNHRS.) when using primary sliding surfaces (GNTRD., GNTRF., GNTRG., GNTRN.) with generic (G) attachment option or primary performance rail surfaces (GNTRR.) only. Use hardware pack, sliding (GNHPS.) when using legacy surfaces specified as sliding attachment only.

To attach meeting end surface to the meeting end beams, specify 2 hardware packs (GNHPF.).

Meeting end beams are not usable in standing height applications.

Dimensions

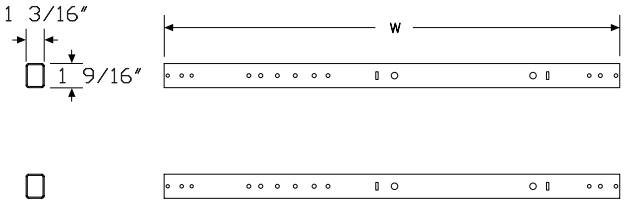

Specification Information

Step 1.

GNBM.

Step 2. Width

48	48″ wide
54	54″ wide
60	60″ wide
66	66″ wide
72	72″ wide
78	78″ wide
84	84″ wide
96	96″ wide

Prices for Steps 1-2.

GNBM.	**48**	$185
	54	$204
	60	$224
	66	$229
	72	$231
	78	$246
	84	$278
	96	$307

Performance Rail

GNRD.
GNRS.

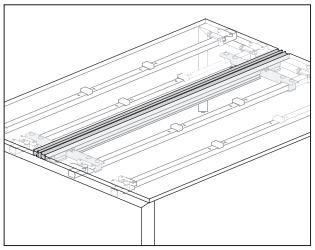

Product Information

Description

This rail attaches to the rear beam(s) in a single-sided or back-to-back rectangular application. It provides an attachment location for many different products, including desk up screens, monitor arms, personal shelves, task lights, and storage. Rail is anodized aluminum and comes with 1 in-line connector for aligning 2 rails placed side-by-side. Attachment hardware included.

Notes

Specify rail width to match width of beam to be used for attachment.

Surfaces must be specified to be used with performance rail.

Performance rail cannot be used within 120° application.

End cap is required to finish exposed end of rail. Order end cap (GNRC.) separately.

Trim strip is available to fill the center channel when screens are not being used. Order trim strip (GNRT.) separately.

Dimensions

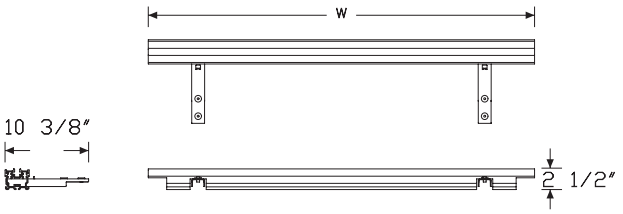

Single Sided Performance Rail

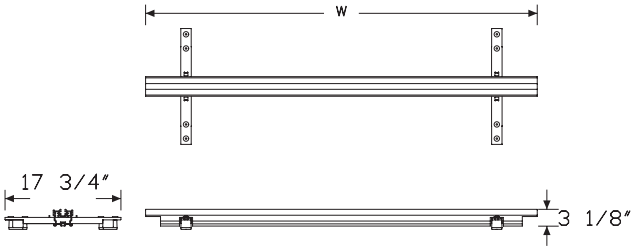

Double Sided Performance Rail

Specification Information

Step 1.

GN A

Step 2. Application

RD.	performance rail, back-to-back application A
RS.	performance rail, single-sided application A

Step 3. Width

42	42" wide A
48	48" wide A
54	54" wide A
60	60" wide A
66	66" wide A
72	72" wide A
78	78" wide A
84	84" wide A
96	96" wide A

Prices for Steps 1-3.

GNRD.	**42**	$318
	48	$334
	54	$351
	60	$368
	66	$384
	72	$402
	78	$417
	84	$435
	96	$467
GNRS.	**42**	$311
	48	$328
	54	$345
	60	$361
	66	$376
	72	$393
	78	$409
	84	$427
	96	$458

End Cap, Performance Rail GNRC.

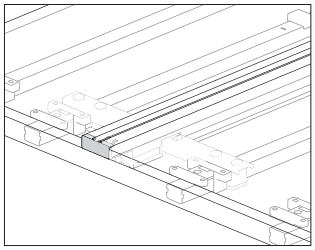

Product Information

Description

This end trim finishes the exposed ends of a Layout Studio® performance rail. Finish is folkstone grey. Quantity of 2.

Dimensions

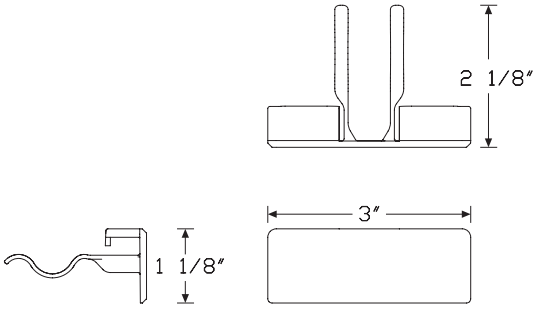

Specification Information

Step 1.

GN A

Step 2. Application

RC. end cap A

Step 3. Quantity

02 Package of 2 A

Prices for Steps 1-3.

GNRC. 02 $14

End Cap, Performance Rail, Package

GNRC.

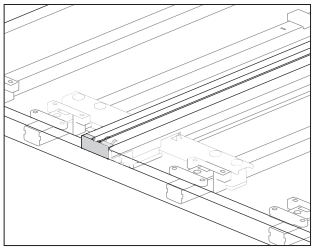

Product Information

Description

This end trim finishes the exposed ends of a Layout Studio® performance rail. Finish is folkstone grey. Quantity of 10.

Dimensions

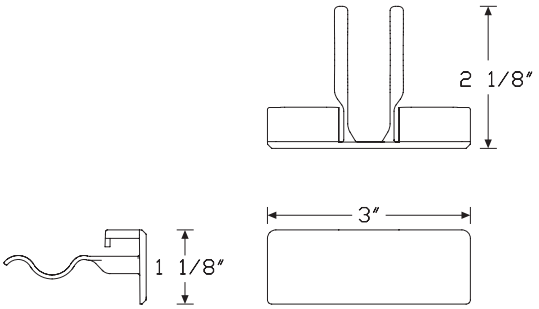

Specification Information

Step 1.

GN A

Step 2. Application

RC. end cap A

Step 3. Quantity

10 Package of 10 A

Prices for Steps 1-3.

GNRC. 10 $54

Trim Strip, Performance Rail Center Channel GNRT.

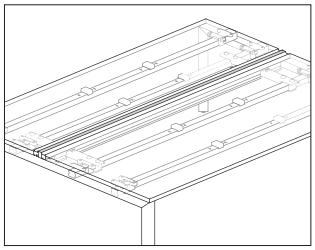

Product Information

Description

This aluminum trip strip fills an unused center channel of a Layout Studio® performance rail. It is anodized aluminum and can be field cut to desired length.

Notes

Trim strip width does not need to match width of performance rail.

The 3"-wide trim strip fills the center channel between the end of a bench and a shared cubby stanchion in an in-line application.

Dimensions

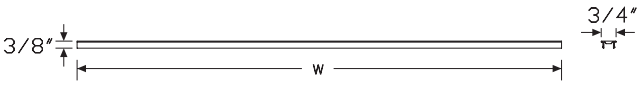

Specification Information

Step 1.

GN A

Step 2. Application

RT. trim strip A

Step 3. Width

03 3" wide A
42 42" wide A
48 48" wide A
54 54" wide A
60 60" wide A
66 66" wide A
72 72" wide A
78 78" wide A
84 84" wide A
96 96" wide A

Prices for Steps 1-3.

GNRT.	**03**	$24
	42	$67
	48	$72
	54	$77
	60	$82
	66	$88
	72	$93
	78	$98
	84	$104
	96	$116

Access Door GNPD.

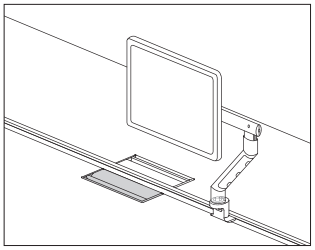

Product Information

Description

This metal door assembly fits inside an access cutout in the back edge of a Layout Studio® primary work surface and provides access to the power and data channel. It has a 3-sided frame and pivoting door.

Notes

Work surface must be specified with access door cutout. Order surface separately.

Dimensions

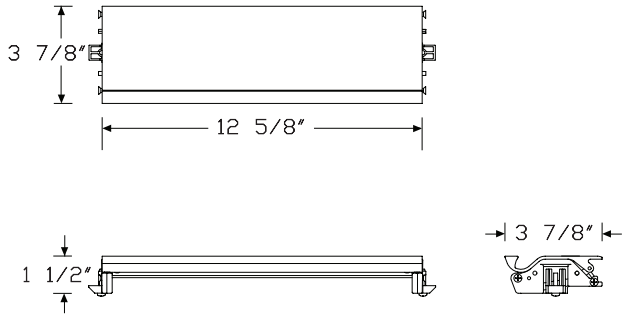

Specification Information

Step 1.

GNPD. A

Step 2. Application

A	edge mounted A	

Prices for Steps 1-2.

GNPD. A		$145

Step 3. Finish

91	white A	+$0
G1	graphite A	+$0
MS	metallic silver A	+$0

Junction Block Attachment Bracket, Performance Rail

GNPA.

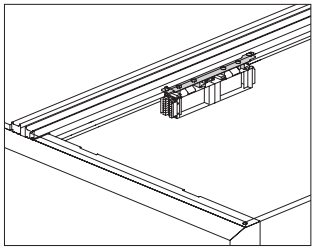

Product Information

Description

This painted steel bracket attaches a 4-circuit power block to a Layout Studio® performance rail. Finish is cool grey neutral.

Notes

Each single-sided (S) and back-to-back (D) bracket supports 1 double power block or 1 double and 1 single power block, between the 2 rear beams centered both front-to-back and left-to-right.

Each performance rail-attached bracket (S or D) supports 1 double or 1 single junction block.

Order 4-circuit junction block (GN1358.) separately.

Dimensions

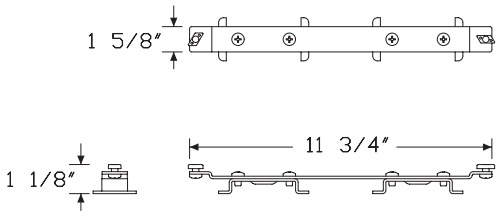

Specification Information

Step 1.

GNPA.R A

Step 2. Application

D	performance rail-attached, back-to-back A	
S	performance rail-attached, single-sided A	

Prices for Steps 1-2.

GNPA.R	**D**	$12
	S	$12

Junction Block, 4-Circuit GN1358

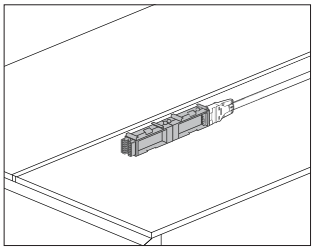

Product Information

Description

This block attaches to a junction block attachment bracket and accepts 4-circuit receptacles for access and distribution of up to 4 20-amp circuits. It has connection points at both ends for attaching a power entry, a 4-circuit power jumper, or block-to-block connector. Finish is black. It is UL Listed for use with Layout Studio® in the US and Canada.

Notes

Layout Studio modular power products are only compatible with other Layout Studio modular products, or with Connect™ 4-circuit modular components. Note that the UL listing for Layout Studio is no longer applicable when connecting Layout Studio power to Connect power.

For single-sided applications, specify the 2-duplex block (GN1358.2S) or the 1-duplex block (GN1358.1S).

For back-to-back applications, specify the 2-duplex block (GN1358.2B) or the 1-duplex block (GN1358.1B).

Order the following products separately:

- Duplex receptacle, 4-circuit (GN1355.)
- Junction block attachment bracket (GNPA.)

To route power from building to junction block, order 4-circuit power entry (GN1351. or GN1352.) separately.

To route power between junction blocks, order junction block to junction block jumper (GN1353.) separately.

To connect 2 junction blocks together, order a short block to block connector (GN1354.S) separately.

Dimensions

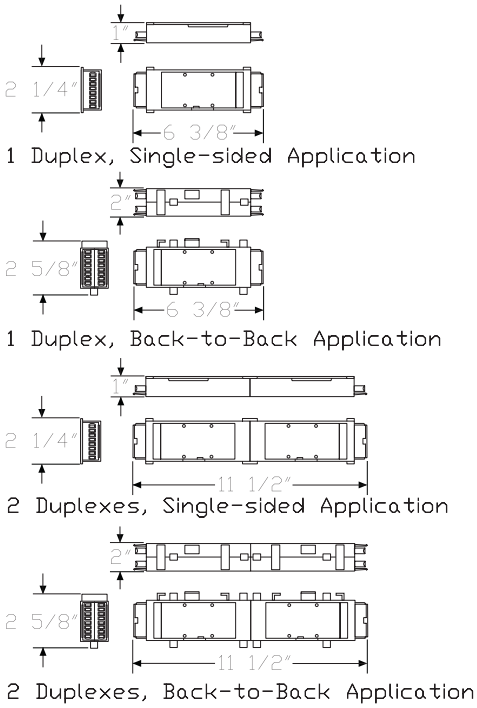

Specification Information

Step 1.

GN1358.

Step 2. Type

1S	1 duplex, single-sided application
1B	1 duplex, back-to-back application
2S	2 duplexes, single-sided application
2B	2 duplexes, back-to-back application

Step 3. Attachment Hardware

B	beam attached
R	performance rail attached

Prices for Steps 1-3.

		B	R
GN1358.	**1S**	$80	92
	1B	$87	97
	2S	$65	76
	2B	$71	82

Block Connector, 4-Circuit GN1354

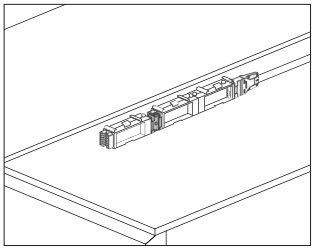

Product Information

Description

This connector connects 2 junction blocks together. Finish is black. Attachment hardware included. It is UL Listed for use with Layout Studio® in the US and Canada.

Notes

Layout Studio modular power products are only compatible with other Layout Studio modular products, or with Connect™ 4-circuit modular components. Note that the UL listing for Layout Studio is no longer applicable when connecting Layout Studio power to Connect power.

When 3 duplex receptacles are required per access point, use this connector to connect a GN1358.1S to a GN1358.2S for single-sided applications, or a GN1358.1B to a GN1358.2B for back-to-back applications.

Dimensions

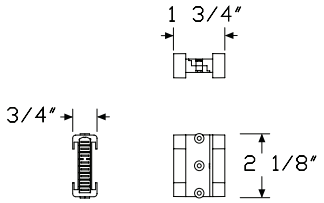

Short Receptacle-to-Receptacle Block Connector

Specification Information

Step 1.

GN1354.S	$44

Junction Block-to-Junction Block Jumper GN1353

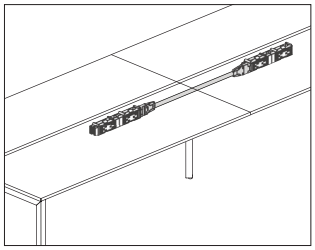

Product Information

Description

This adjustable power jumper distributes up to 4 20-amp circuits between 2 junction blocks. One end of the jumper extends an additional 3" when connecting to an adjacent junction block. It is UL Listed for use with Layout Studio® in the US and Canada.

Notes

Layout Studio modular power products are only compatible with other Layout Studio modular products, or with Connect™ 4-circuit modular components. Note that the UL listing for Layout Studio is no longer applicable when connecting Layout Studio power to Connect power.

Finish on 5/8" oval metallic conduit is silver.

For New York City, a harness cover (GNPH.) to span between wire management trays must be ordered separately.

Dimensions

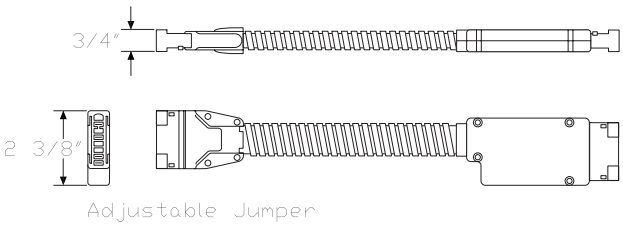

Specification Information

Step 1.

GN1353.

Step 2. Width

12	12" wide
18	18" wide
24	24" wide
30	30" wide
36	36" wide
42	42" wide
48	48" wide
54	54" wide
60	60" wide
66	66" wide
72	72" wide
78	78" wide
84	84" wide
90	90" wide
108	108" wide
120	120" wide
132	132" wide
144	144" wide

Step 3. Type

A	adjustable jumper

Prices for Steps 1-3.

		A
GN1353.	**12**	$71
	18	$77
	24	$81
	30	$88
	36	$93
	42	$97
	48	$102
	54	$108
	60	$113
	66	$117
	72	$122
	78	$129
	84	$133
	90	$138
	108	$153
	120	$162
	132	$174
	144	$184

Harness Cover GNPH.

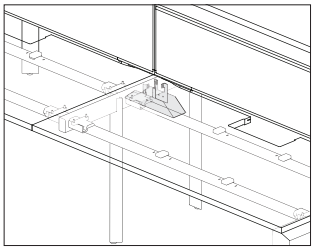

Product Information

Description

This cover provides a secure chase for the routing of a power harness between Layout Studio® wire management trays when UL1286 Listing is required.

Notes

Specify power harness separately.

Dimensions

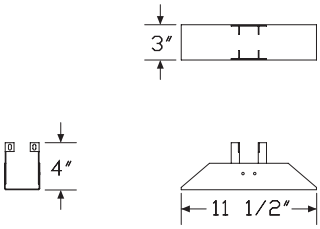

Specification Information

Step 1.

GNPH.		$24

Step 2. Finish

91	white	+$0
G1	graphite	+$0
MS	metallic silver	+$0

Duplex Receptacle, 4-Circuit GN1355

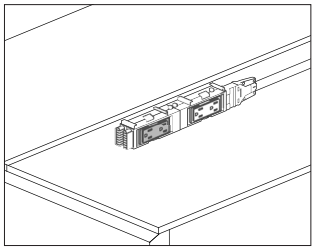

Product Information

Description

This 15- or 20-amp duplex receptacle attaches to a junction block to provide electrical access. Finish is black. Package of 1. It is UL Listed for use with Layout Studio® in the US and Canada.

Notes

Layout Studio modular power products are only compatible with other Layout Studio modular products, or with Connect™ 4-circuit modular components. Note that the UL listing for Layout Studio is no longer applicable when connecting Layout Studio power to Connect power.

Receptacle is labeled as I, II, III, or IV for circuit identification.

Order junction block (GN1358.) separately.

Dimensions

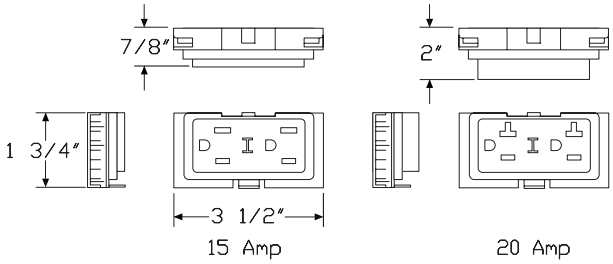

Specification Information

Step 1.

GN1355.

Step 2. Amps

15 15 amp

20 20 amp

Step 3. Circuit

1 circuit I

2 circuit II

3 circuit III

4 circuit IV

Prices for Steps 1-3.

		1	2	3	4
GN1355.	**15**	$21	21	21	21
	20	$26	26	26	26

Power Entry, 4-Circuit GN1351

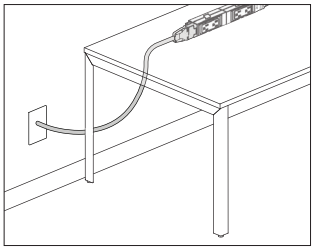

Product Information

Description

This power entry connects a building's electrical from a wall, floor, or column to the end of a 4-circuit junction block and distributes up to 4 20-amp circuits. UL Listed for use with Layout Studio® in the US and Canada.

Notes

Layout Studio modular power products are only compatible with other Layout Studio modular products, or with Connect™ 4-circuit modular components. Note that the UL listing for Layout Studio is no longer applicable when connecting Layout Studio power to Connect power.

Power entry can be field cut to the appropriate length.

For San Francisco, specify 3/8" flex metallic conduit option (C).

Finish color on liquid tight conduit is black. Finish color on metallic conduit is silver.

To manage and/or cover power entry, order umbilical riser (GNWF. or GNWG.) or floor power entry cover (GNPC.) separately.

A licensed electrician must wire the power entry to the building's electrical system.

Dimensions

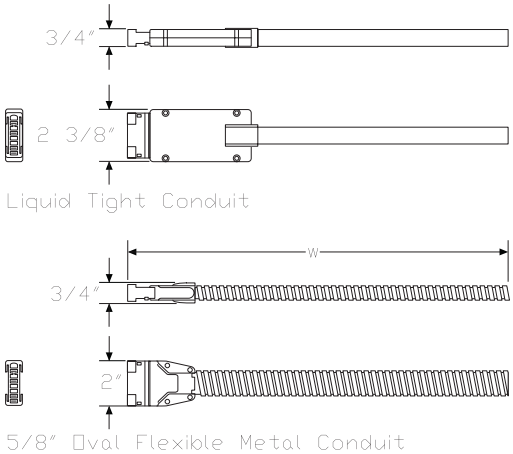

Specification Information

Step 1.

GN1351.

Step 2. Length

06	6' long
12	12' long
18	18' long
24	24' long

Step 3. Conduit Type

L	liquid tight conduit
C	3/8" flex metallic conduit

Prices for Steps 1-3.

		L	C
GN1351.	**06**	$137	137
	12	$194	194
	18	$254	254
	24	$326	326

Power Entry, 4-Circuit, New York City GN1352

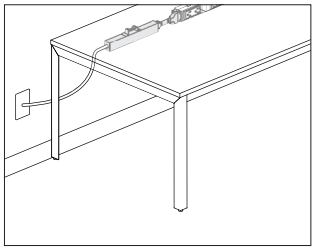

Product Information

Description

This power entry connects a building's electrical from a wall, floor, or column to the end of a 4-circuit junction block and distributes up to 4 20-amp circuits. It includes a junction box and harness. It is UL Listed for use with Layout Studio® in the US and Canada.

Notes

Layout Studio modular power products are only compatible with other Layout Studio modular products, or with Connect™ 4-circuit modular components. Note that the UL listing for Layout Studio is no longer applicable when connecting Layout Studio power to Connect power.

Power entry comes with a 38″ festoon.

A licensed electrician must wire the power entry to the building's electrical system.

Dimensions

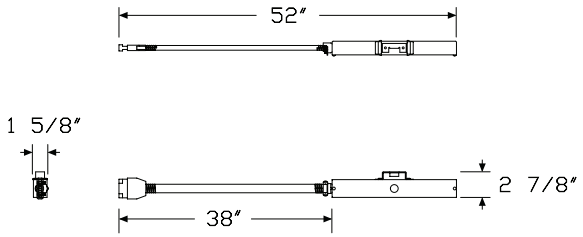

Specification Information

Step 1.

GN1352.38	$217

Wire Management Tray, Single, Performance Rail GNWS.

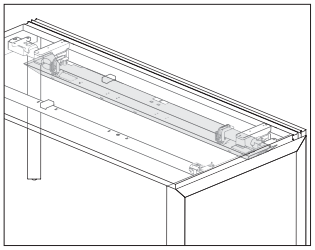

Product Information

Description

This painted steel tray holds power and voice/data cables within a Layout Studio® single-sided application when a performance rail is being used. Attachment hardware included.

Notes

Specify tray size to match beam width.

To route power and/or data from floor to tray, specify umbilical riser (GNWF.T or GNWG.T) separately.

Dimensions

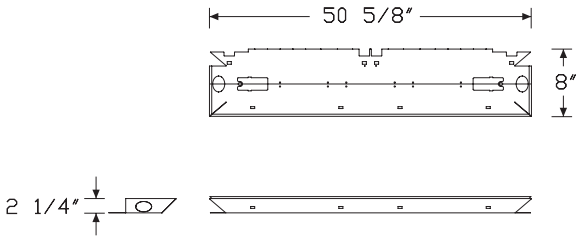

Specification Information

Step 1.

GN A

Step 2. Type

WS.R	single A	

Step 3. Size

42	42″ wide A	
48	48″ wide A	
54	54″ wide A	
60	60″ wide A	
66	66″ wide A	
72	72″ wide A	
78	78″ wide A	
84	84″ wide A	
96	96″ wide A	

Prices for Steps 1-3.

GNWS.R	**42**	$140
	48	$142
	54	$166
	60	$191
	66	$194
	72	$196
	78	$202
	84	$219
	96	$236

Step 4. Finish

91	white A	+$0
G1	graphite A	+$0
MS	metallic silver A	+$0

Wire Management Tray

GNWD.
GNWS.

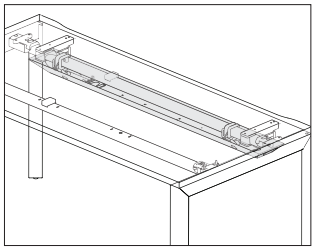

Product Information

Description

This painted steel tray provides a location to hold and manage power and voice/data cables within a Layout Studio® environment. Trays are available for both back-to-back and single-sided applications.

Notes

Single-sided wire management tray is for use with a non-rail surface. For performance rail, order wire management tray, single, performance rail (GNWS.R) separately.

The double unit attaches directly to beams with included hardware.

The single unit attaches to beams, but also requires an additional bracket. For each single tray, order 2 generic beam clamps (GNSG.) separately. If a desk up or modesty screen is being used, the generic beam clamps are not required.

Specify tray width to match beam width.

For use with double tray, order optional cable management clips (GNWC.) separately.

To route power and/or data from the floor to a cable tray, order the umbilical riser (GNWF.T or GNWG.T) separately.

Tray includes a knock-out on each end to allow a power jumper to pass from 1 tray to the next when UL1286 Listing is required (primarily New York City). Order harness cover (GNPH.) separately.

Dimensions

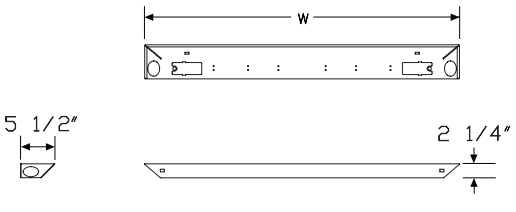

Single Tray

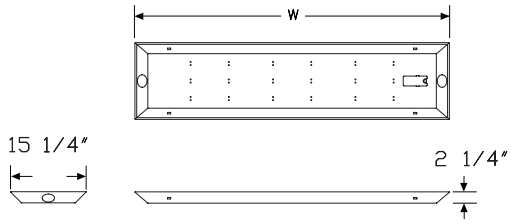

Double Tray

Specification Information

Step 1.

GN

Step 2. Type

WS.	single
WD.	double

Step 3. Width

36	36" wide
42	42" wide
48	48" wide
54	54" wide
60	60" wide
66	66" wide
72	72" wide
78	78" wide
84	84" wide
96	96" wide

Prices for Steps 1-3.

GNWS.	**36**	$139
	42	$141
	48	$143
	54	$167
	60	$191
	66	$194
	72	$196
	78	$202
	84	$220
	96	$236
GNWD.	**36**	$133
	42	$137
	48	$141
	54	$160
	60	$175
	66	$178
	72	$180
	78	$185
	84	$202
	96	$217

Step 4. Finish

91	white	+$0
G1	graphite	+$0
MS	metallic silver	+$0

Data Module GNWM.

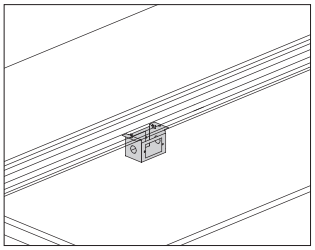

Product Information

Description

This housing mounts to the underside of a Layout Studio® performance rail or to the bottom of a wire management tray and supports face plates with voice/data ports. Finish is cool grey neutral. Attachment hardware included.

Notes

Housing accepts a standard NEMA data faceplate.

Dimensions

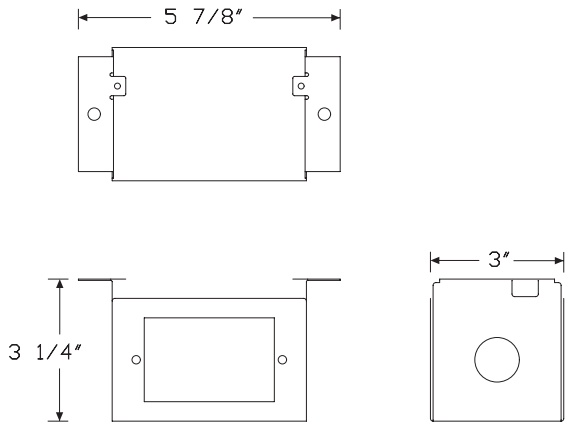

Specification Information

Step 1.

GN A

Step 2. Application

WM. data box A

Prices for Steps 1-2.

GNWM.	$28

Cable Management Clips, Double Tray GNWC.

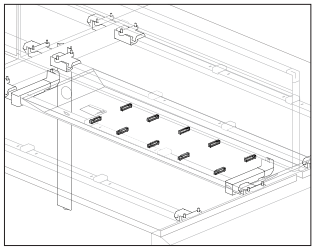

Product Information

Description

These clips attach into holes in the bottom of a double cable management tray to manage voice/data cables. Package includes 10 clips.

Dimensions

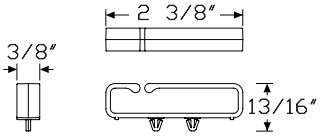

Specification Information

Step 1.

GNWC.

Step 2. Quantity

10 10 per pack

Prices for Steps 1-2.

GNWC. 10 $15

Floor Power Entry Cover GNPC.

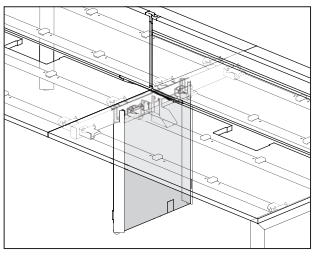

Product Information

Description

This 2-piece painted metal cover encloses the open space located between the 2 legs of a Layout Studio® 48″-, 60″-, or 72″-deep intermediate desk leg. It is used to conceal a floor power entry and/or cables from the floor to a wire management tray. Attachment hardware included.

Dimensions

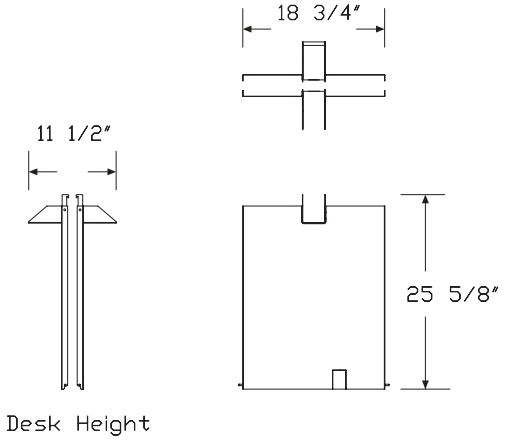

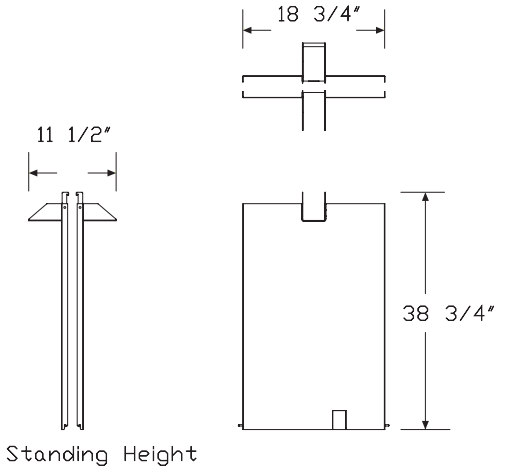

Specification Information

Step 1.

GNPC.

Step 2. Height

F	desk height	
S	standing height	

Prices for Steps 1-2.

GNPC.	**F**	$213
	S	$253

Step 3. Finish

91	white	+$0
G1	graphite	+$0
MS	metallic silver	+$0

Umbilical Riser, Fixed Height

GNWF.
GNWG.

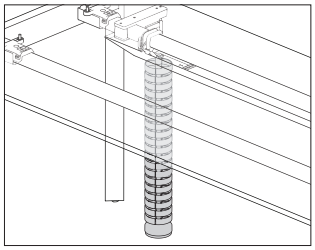

Product Information

Description

This umbilical riser routes power and/or data cables from the floor to the underside of a surface or wire management tray.

Notes

For data capacity, see Cable Capacity Chart in Omni.

Dimensions

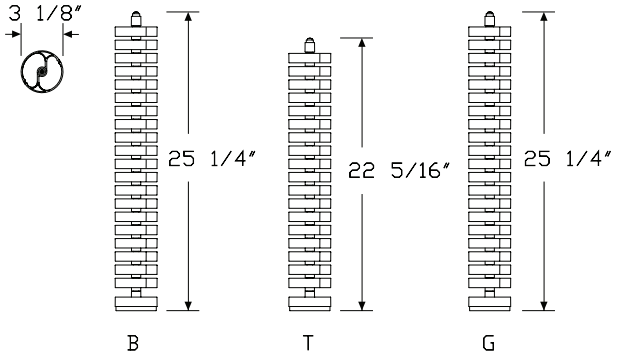

Fixed, seated height

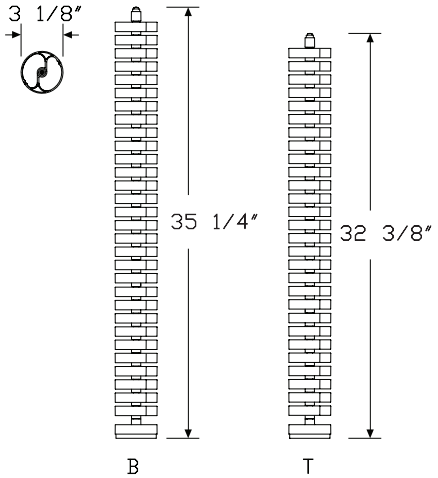

Fixed, standing height

Specification Information

Step 1.

GN

Step 2. Type

WG.	fixed, standing height A
WF.	fixed, seated height

Step 3. Attachment

For fixed, seated height (WF.)

B	beam attachment
T	tray attachment
G	generic attachment

For fixed, standing height (WG.)

B	beam attachment
T	tray attachment

Prices for Steps 1-3.

GNWG.	**B**	$161
	T	$155
GNWF.	**B**	$79
	T	$72
	G	$87

Step 4. Finish

91	white	+$0
G1	graphite	+$0
MS	metallic silver	+$0

Primary Worksurface, Rectangular, Performance Rail

GNTRR.

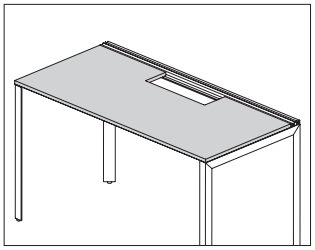

Product Information

Description

This squared-edge surface attaches to 1 set of primary beams when using a performance rail. It can be used in a table, single-sided bench, or back-to-back bench application. It has a laminate top and thermoplastic edge, laminate top with a thermoplastic backed plywood edge, or veneer top and edge. Surface is 1 1/8" thick. It is available with or without an access door cutout which provides access to the power and data channel.

Notes

Gap between back edge of surface and performance rail is 0.6" deep and runs the full width of the surface.

For surfaces with access cutout (C, D, L, R), order access door (GNPD.) separately.

Specify attachment hardware kit separately.

For fixed attachment, order hardware pack (GNHPF.) separately.

For quick release attachment, order the quick release attachment hardware pack (GNHPA.) in addition to the fixed attachment hardware pack (GNHPF.) separately.

Sliding surface attachment is available for 24"- or 30"-deep surfaces; order rectangular primary surface sliding hardware pack (GNHRS.) separately.

Attaching clamp-mounted components to back edge of a sliding surface may result in reduced surface extension.

Access door cutouts specified on left side (L) or right side (R) are located along the back edge of the surface at a fixed distance from the left or right end.

Dimensions

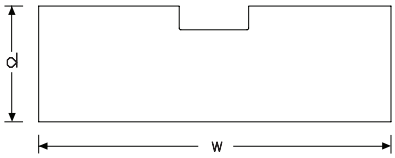

For 42"–96" wide, access door cutout centered

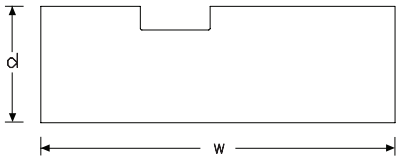

For 54"–78" wide, access door cutout left side

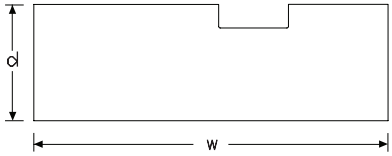

For 54"–78" wide, access door cutout right side

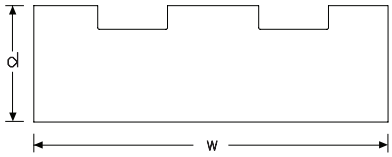

For 84" and 96" wide, two cutouts

Primary Worksurface, Rectangular, Performance Rail

continued

Specification Information

Step 1.

GN [A]

Step 2. Type

TRR. rectangular primary surface for use with performance rail [A]

Step 3. Depth

24 24" deep [A]
30 30" deep [A]

Step 4. Width

42 42" wide [A]
48 48" wide [A]
54 54" wide [A]
60 60" wide [A]
66 66" wide [A]
72 72" wide [A]
78 78" wide [A]
84 84" wide [A]
96 96" wide [A]

Step 5. Access Detail

For 42" wide (42) or 48" wide (48)

N no access [A]
C access door cutout, centered [A]

For 54" wide (54), 60" wide (60), 66" wide (66), 72" wide (72), or 78" wide (78)

N no access [A]
L access door cutout, left side [A]
R access door cutout, right side [A]
C access door cutout, centered [A]

For 84" wide (84) or 96" wide (96)

N no access [A]
C access door cutout, centered [A]
D two access door cutouts [A]

Step 6. Surface Material

L laminate top/thermoplastic edge [A]
U laminate top/universal edge [A]
W veneer [A]

Prices for Steps 1-6.

		NL	NU	NW	LL	LU	LW
GNTRR.24	**42**	$183	183	295	—	—	—
	48	$197	197	322	—	—	—
	54	$216	216	353	237	237	373
	60	$234	234	383	255	255	403
	66	$255	255	422	277	277	442
	72	$276	276	459	296	296	479
	78	$315	315	523	335	335	544
	84	$353	353	588	—	—	—
	96	$383	383	639	—	—	—
30	**42**	$211	209	336	—	—	—
	48	$227	227	371	—	—	—
	54	$249	249	408	270	270	431
	60	$270	270	445	291	291	467
	66	$300	300	489	322	322	510
	72	$322	322	533	343	343	555
	78	$365	365	608	387	387	631
	84	$408	408	685	—	—	—
	96	$445	444	746	—	—	—

		DL	DU	DW	RL	RU	RW
GNTRR.24	**54**	—	—	—	$237	237	373
	60	—	—	—	$255	255	403
	66	—	—	—	$277	277	442
	72	—	—	—	$296	296	479
	78	—	—	—	$335	335	544
	84	$395	395	631	—	—	—
	96	$426	426	681	—	—	—
30	**54**	—	—	—	$270	270	431
	60	—	—	—	$291	291	467
	66	—	—	—	$322	322	510
	72	—	—	—	$343	343	555
	78	—	—	—	$387	387	631
	84	$452	452	727	—	—	—
	96	$487	487	788	—	—	—

		CL	CU	CW
GNTRR.24	**42**	$204	203	318
	48	$220	220	343
	54	$237	237	373
	60	$255	255	403
	66	$277	277	442
	72	$296	296	479
	78	$335	335	544
	84	$373	373	608
	96	$403	403	661

Primary Worksurface, Rectangular, Performance Rail

continued

30	42	$231	231	358
	48	$248	248	393
	54	$270	270	431
	60	$291	291	467
	66	$322	322	510
	72	$343	343	555
	78	$387	387	631
	84	$431	431	706
	96	$466	466	767

Step 7. Surface Finish

For laminate top/thermoplastic edge (L) or laminate top/universal edge (U)

76	light brown walnut A	+$0
8Q	folkstone grey A	+$0
91	white A	+$0
98	studio white A	+$0
CL	cool grey neutral A	+$0
HF	inner tone light A	+$0
HM	natural maple A	+$0
HP	light anigre A	+$0
HT	inner tone A	+$0
HX	aged cherry A	+$0
HY	walnut on cherry A	+$0
LA	light ash A	+$0
LBA	clear on ash A	+$0
LBB	oak on ash A	+$0
LBC	walnut on ash A	+$0
LBD	dark brown walnut A	+$0
LBE	medium red walnut A	+$0
LBF	neutral twill A	+$0
LBG	sarum twill A	+$0
LBH	earthen twill A	+$0
LBJ	graphite twill A	+$0
LBK	pewter mesh A	+$0
LBL	steel mesh A	+$0
LBM	crisp linen A	+$0
LBN	classic linen A	+$0
LBP	casual linen A	+$0
LBQ	white twill A	+$0
LBR	phantom ecru A	+$0
LBS	phantom cocoa A	+$0
LBU	medium matte walnut A	+$0
LBV	warm grey teak A	+$0
LM	mahogany A	+$0
LT	light tone A	+$0
LU	soft white A	+$0
MT	medium tone A	+$0
WL	sandstone A	+$0
WN	warm grey neutral A	+$0

For veneer (W)

2U	light brown walnut A	+$55
40	dark brown walnut A	+$55
ET	clear on ash A	+$55
EU	oak on ash A	+$55
EV	walnut on ash A	+$55
UX	walnut on cherry A	+$55

Primary Worksurface, Rectangular, Performance Rail

continued

Step 8. Edge Finish

For laminate top/thermoplastic edge (L)

76	light brown walnut A	+$0
8Q	folkstone grey A	+$0
91	white A	+$0
98	studio white A	+$0
CL	cool grey neutral A	+$0
HF	inner tone light A	+$0
HM	natural maple A	+$0
HP	light anigre A	+$0
HT	inner tone A	+$0
HX	aged cherry A	+$0
HY	walnut on cherry A	+$0
LA	light ash A	+$0
LBA	clear on ash A	+$0
LBR	phantom ecru A	+$0
LBS	phantom cocoa A	+$0
LBU	medium matte walnut A	+$0
LBV	warm grey teak A	+$0
LBB	oak on ash A	+$0
LBC	walnut on ash A	+$0
LBD	dark brown walnut A	+$0
LBE	medium red walnut A	+$0
LBF	neutral twill A	+$0
LBG	sarum twill A	+$0
LBH	earthen twill A	+$0
LBJ	graphite twill A	+$0
LBK	pewter mesh A	+$0
LBL	steel mesh A	+$0
LBM	crisp linen A	+$0
LBN	classic linen A	+$0
LBP	casual linen A	+$0
LBQ	white twill A	+$0
LU	soft white A	+$0
WL	sandstone A	+$0
WN	warm grey neutral A	+$0

For laminate top/universal edge (U)

PLY	plywood edge A	+$50

Meeting End, Rectangular

GNTDG.
GNTDN.

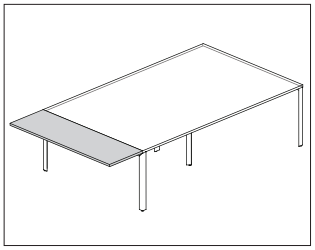

Product Information

Description

This 20″-deep squared-edge surface attaches to 2 sets of meeting end beams positioned at the end of a back-to-back bench application to create a meeting space. It has a laminate top with thermoplastic edge, laminate top with a thermoplastic backed plywood edge, or veneer top and edge. An optional grommet cut-out and grommet is available. Surface is 1 1/8″ thick.

Notes

Grommet color matches the laminate color for solid color laminates, and is graphite for all other laminates and veneers.

For each meeting end surface, order 2 fixed attachment hardware packs (GNHPF.) separately.

Dimensions

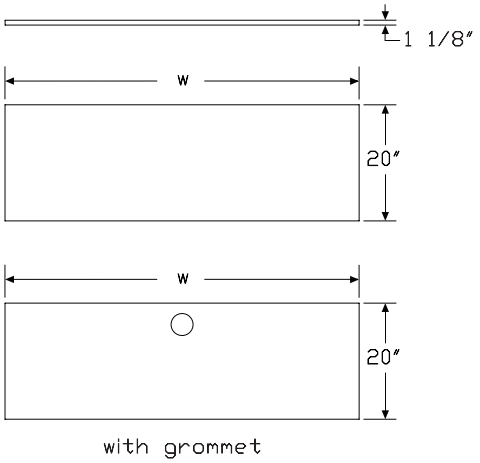

Specification Information

Step 1.

GN

Step 2. Type

TD rectangular meeting end

Step 3. Access Detail

N. no access cut-out
G. grommet

Step 4. Depth

20 20″ deep

Step 5. Width

48 48″ wide
60 60″ wide
72 72″ wide

Step 6. Attachment

F non-sliding

Step 7. Surface Material

L laminate top/thermoplastic edge
W veneer
U laminate top/universal edge

Prices for Steps 1-7.

		FL	FW	FU
GNTDN.	**20**	**48**	$173	294
173				
	60	$202	363	202
	72	$250	432	250
GNTDG.20	**48**	$193	313	193
	60	$223	383	223
	72	$270	452	270

Step 8. Surface Finish

For laminate top/thermoplastic edge (L) or laminate top/universal edge (U)

76	light brown walnut	+$0
91	white	+$0
98	studio white	+$0
8Q	folkstone grey	+$0
CL	cool grey neutral	+$0
HF	inner tone light	+$0
HM	natural maple	+$0
HP	light anigre	+$0
HT	inner tone	+$0
HX	aged cherry	+$0
HY	walnut on cherry	+$0
LA	light ash	+$0
LBA	clear on ash	+$0
LBR	phantom ecru	+$0
LBS	phantom cocoa	+$0
LBU	medium matte walnut	+$0
LBV	warm grey teak	+$0
LBB	oak on ash	+$0
LBC	walnut on ash	+$0
LBD	dark brown walnut	+$0
LBE	medium red walnut	+$0
LBF	neutral twill	+$0
LBG	sarum twill	+$0
LBH	earthen twill	+$0
LBJ	graphite twill	+$0
LBK	pewter mesh	+$0
LBL	steel mesh	+$0
LBM	crisp linen	+$0
LBN	classic linen	+$0
LBP	casual linen	+$0
LBQ	white twill	+$0
LU	soft white	+$0
WL	sandstone	+$0
WN	warm grey neutral	+$0

Wood Veneer

For veneer (W)

2U	light brown walnut	+$55
40	dark brown walnut	+$55
ET	clear on ash	+$55
EU	oak on ash	+$55
EV	walnut on ash	+$55

Step 9. Edge Finish

For laminate top/thermoplastic edge (L)

76	light brown walnut	+$0
8Q	folkstone grey	+$0
91	white	+$0
98	studio white	+$0
CL	cool grey neutral	+$0
LA	light ash	+$0
LBA	clear on ash	+$0
LBR	phantom ecru	+$0
LBS	phantom cocoa	+$0
LBU	medium matte walnut	+$0
LBV	warm grey teak	+$0
LBB	oak on ash	+$0
LBC	walnut on ash	+$0
LBD	dark brown walnut	+$0
LBE	medium red walnut	+$0
LBF	neutral twill	+$0
LBG	sarum twill	+$0
LBH	earthen twill	+$0
LBJ	graphite twill	+$0
LBK	pewter mesh	+$0
LBL	steel mesh	+$0
LBM	crisp linen	+$0
LBN	classic linen	+$0
LBP	casual linen	+$0
LBQ	white twill	+$0
WL	sandstone	+$0
WN	warm grey neutral	+$0
HF	inner tone light	+$0
HM	natural maple	+$0
HP	light anigre	+$0
HT	inner tone	+$0
HX	aged cherry	+$0
HY	walnut on cherry	+$0
LU	soft white	+$0

For laminate top/universal edge (U)

PLY	plywood edge A	+$50

Hardware Pack, Fixed Surfaces

GNHDF.
GNHPF.
GNHSF.

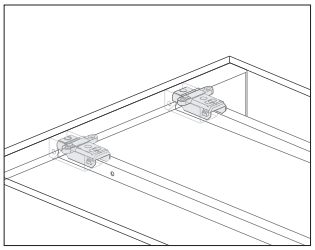

Product Information

Description

This hardware pack is required in order to connect a set of beams to a pair of Engage legs, and to provide a fixed attachment of a surface.

Notes

1 hardware pack is required for each beam kit specified. Meeting end surfaces (GNTDG., GNTDN.) require an additional 2 rectangular primary hardware packs (GNHPF.) per surface.

For quick release attachment, a quick release hardware pack (GNHPA., GNHDA.) can be added. Specify 1 hardware pack for each beam kit.

Specification Information

Step 1.

GNH

Step 2. Type

PF.	rectangular primary
DF.	120° - primary
SF.	return

Prices for Steps 1-2.

GNHPF.	$51
GNHDF.	$113
GNHSF.	$135

Hardware Pack, Quick Release Attachment

GNHDA.
GNHPA.

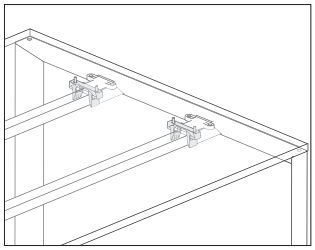

Product Information

Description

This hardware pack provides for the attachment and removal of surfaces without the use of any tools.

Notes

Specify 1 quick release hardware pack for each fixed attachment hardware pack (GNHDF., GNHPF., GNHSF.) specified.

Dimensions

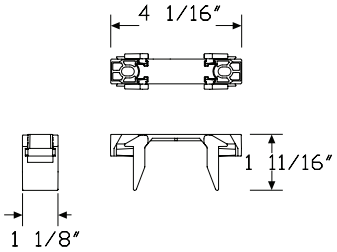

Specification Information

Step 1.

GNH

Step 2. Type

PA. rectangular surface

DA. 120° surface

Prices for Steps 1-2.

GNHPA.	$18
GNHDA.	$27

Hardware Pack - Sliding - Rectangular Primary

GNHRS.

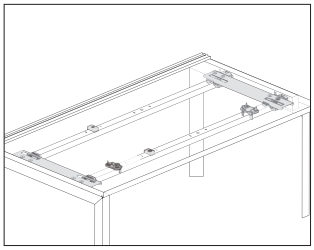

Product Information

Description

This hardware pack attaches a 24"-deep or 30"-deep rectangular primary surface to a set of beams when using a performance rail or when using a non-rail surface with the generic attachment option. It allows the surface to slide, providing access to a cable management tray.

Notes

Specify 1 hardware pack for each sliding surface.

Attaching clamp-mounted components to the back edge of a sliding surface may result in reduced surface extension.

Dimensions

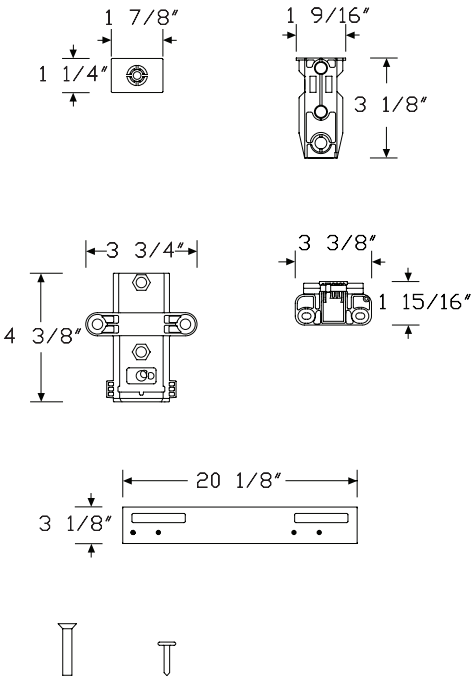

Specification Information

Step 1.

GNHRS. A

Step 2. Depth

24	for 24"-deep surface A	
30	for 30"-deep surface A	

Prices for Steps 1-2.

GNHRS.	**24**	$195
	30	$195

Pari Screen, Desk Up, Performance Rail

GNSDRT

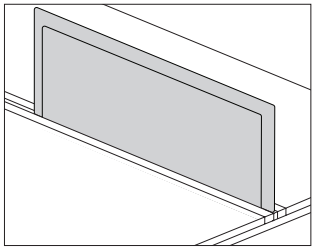

Product Information

Description

This tackable frameless fabric screen attaches to a Layout Studio® performance rail and provides boundary above a surface at the back edge of the work surface. It comes with an alignment clip to align 2 screens when placed side-by-side. Attachment hardware included.

Notes

Screen width does not need to match performance rail width.

When using 78"-wide performance rail, specify 2 39"-wide screens to provide full screen coverage. When using 84"-wide rail, specify 2 42"-wide screens. When using 96"-wide rail, specify 2 48"-wide screens.

Screen attaches to performance rail with provided hardware. No additional hardware is required.

Screen is shared in back-to-back applications.

All fabric is railroaded.

Screen accepts Customer's Own Material (COM). Yardage is estimated for nondirectional 54"-wide fabrics.

Width—Yardage

36—1.32
39—1.42
42—1.51
48—1.70
54—1.89
60—2.08
66—2.27
72—2.46

For information on multiple quantities or directional fabrics, contact COM Department. See Order Information in Appendices.

Dimensions

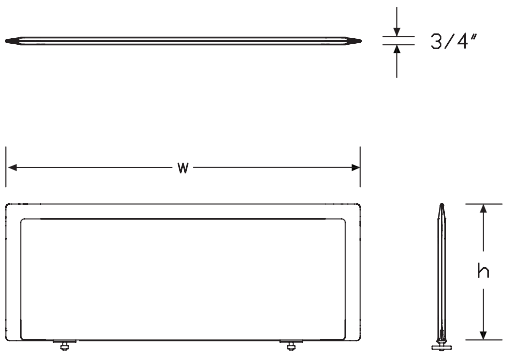

Specification Information

Step 1.

GN A

Step 2. Type

SD desk up A

Step 3. Configuration

R performance rail attachment A

Step 4. Edge

T. Pari screen A

Step 5. Height

42 42" high A
46 46" high A

Step 6. Width

36 36" wide A
39 39" wide A
42 42" deep A
48 48" wide A
54 54" wide A
60 60" wide A
66 66" wide A
72 72" wide A

Prices for Steps 1-6.

		36	39	42	48	54	60
GNSDRT.	**42**	$448	485	504	534	572	612
	46	$464	500	520	548	589	632

		66	72
GNSDRT.	**42**	$655	687
	46	$671	709

Step 7. Surface Finish

Price Category C	+$89
Price Category 1	+$0
Price Category 2	+$12
Price Category 3	+$20
Price Category 4	+$32
Price Category E	+$136

Flat Edge Screen, Desk Up, Performance Rail — GNSDRS

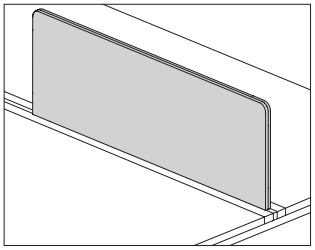

Product Information

Description

This tackable frameless fabric screen attaches to a Layout Studio® performance rail and provides boundary above a surface at the back edge of the work surface. It has a flat edge and comes with an alignment clip to align 2 screens when placed side-by-side. Attachment hardware included.

Notes

Screen width does not need to match performance rail width.

When using 78"-wide performance rail, specify 2 39"-wide screens to provide full screen coverage. When using 84"-wide rail, specify 2 42"-wide screens. When using 96"-wide rail, specify 2 48"-wide screens.

Screen attaches to performance rail with provided hardware. No additional hardware is required.

Screen is shared in back-to-back applications.

All fabric is railroaded.

Screen accepts Customer's Own Material (COM). Yardage is estimated for nondirectional 54"-wide fabrics.

Width—Yardage

36—1.32
39—1.42
42—1.51
48—1.70
54—1.89
60—2.08
66—2.27
72—2.46

For information on multiple quantities or directional fabrics, contact COM Department. See Order Information in Appendices.

Dimensions

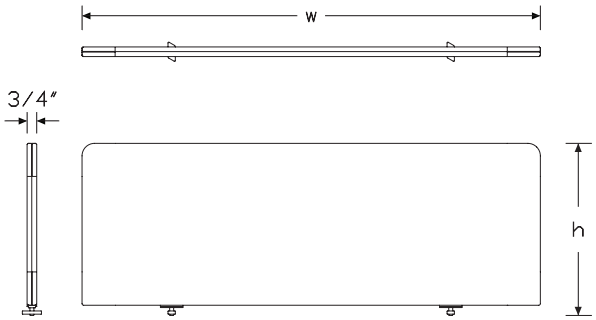

Specification Information

Step 1.

GN A

Step 2. Type

SD desk up A

Step 3. Configuration

R performance rail attachment A

Step 4. Edge

S. tackable fabric with flat edge A

Step 5. Height

42 42" high A
46 46" high A

Step 6. Width

36 36" wide A
39 39" wide A
42 42" wide A
48 48" wide A
54 54" wide A
60 60" wide A
66 66" wide A
72 72" wide A

Prices for Steps 1-6.

		36	39	42	48	54	60
GNSDRS.	**42**	$275	290	305	320	335	350
	46	$290	305	320	334	352	369

		66	72
GNSDRS.	**42**	$370	390
	46	$385	412

Step 7. Surface Finish

Price Category C	+$89
Price Category 1	+$0
Price Category 2	+$12
Price Category 3	+$20
Price Category E	+$136

Glass Screen, Desk Up, Frameless, Performance Rail

GNSDRG

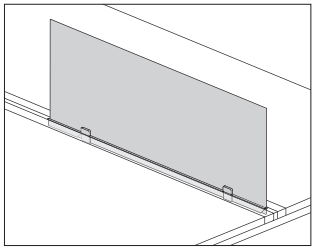

Product Information

Description

This frameless glass screen attaches to a Layout Studio® performance rail and provides boundary above a surface at the back edge of the work surface. Attachment hardware included.

Notes

Screen width does not need to match performance rail width.

Screen attaches to performance rail with provided hardware. No additional hardware is required.

Screen is shared in back-to-back applications.

For no glass-for customer's own insert, the custom insert can be the following thickness:

- 1/4" option (NN)—0.219"-0.237" thick
- 3/8" option (N3)—0.361"-0.379" thick

The insert height can be up to 17 1/2" high.

Recommended materials are glass, acrylic, laminate, wood or materials that will remain straight over time.

Dimensions

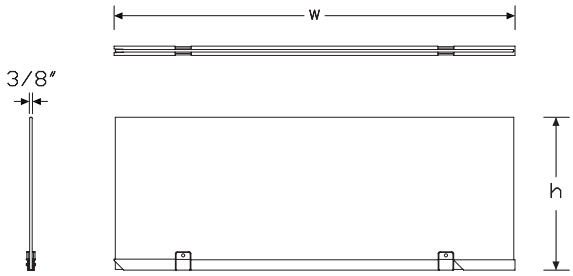

Specification Information

Step 1.

GN A

Step 2. Type

SD desk up A

Step 3. Configuration

R performance rail attachment A

Step 4. Material

G. glass A

Step 5. Height

42 42" high A
46 46" high A

Step 6. Width

36 36" wide A
42 42" wide A
48 48" wide A
54 54" wide A
60 60" wide A
66 66" wide A
72 72" wide A
78 78" wide A
84 84" wide A
96 96" wide A

Step 7. Surface Finish

TR clear glass - 1/4" thick A
5A opal etched - 1/4" thick A
NN no glass- for customer's own glass A
C3 clear glass - 3/8" thick A
G3 opal glass - 3/8" thick A
N3 no glass, for customer's own 3/8" thick glass A

Glass Screen, Desk Up, Frameless, Performance Rail

continued

Prices for Steps 1-7.

		TR	5A	NN	C3	G3	N3
GNSDRG. 42	**36**	$293	381	175	366	476	175
	42	$330	429	211	411	536	211
	48	$350	454	225	436	567	225
	54	$373	486	226	467	606	226
	60	$400	520	227	500	650	227
	66	$429	557	228	536	696	228
	72	$450	583	229	561	729	229
	78	$474	615	230	592	770	230
	84	$500	650	231	625	812	231
	96	$546	709	265	682	887	265
46	**36**	$303	394	175	379	492	175
	42	$340	441	211	425	552	211
	48	$359	466	225	449	581	225
	54	$385	500	226	482	625	226
	60	$412	537	227	515	671	227
	66	$438	570	228	548	711	228
	72	$464	602	229	579	753	229
	78	$490	638	230	612	796	230
	84	$517	672	231	646	840	231
	96	$563	732	265	703	914	265

Layout Studio® Laminate Screen, Desk Up, Performance Rail

GNSDRL
GNSDRU

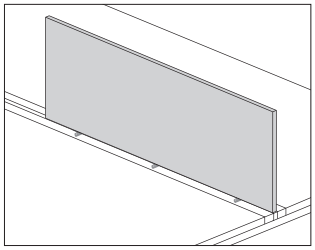

Product Information

Description

This laminate screen attaches to a Layout Studio® performance rail and provides boundary above a surface at the back edge of the work surface. Attachment hardware included.

Notes

Screen width does not need to match performance rail width.

When using 78"-wide performance rail, specify 2 39"-wide screens to provide full screen coverage. When using 84"-wide rail, specify 2 42"-wide screens. When using 96"-wide rail, specify 2 48"-wide screens.

Screen attaches to performance rail with included hardware. No additional hardware is needed.

Screen is shared in back-to-back applications.

To align screens in a run and display name tags, order Ubi nametag clip (Y1121.) separately and place over the seam between laminate screens.

Dimensions

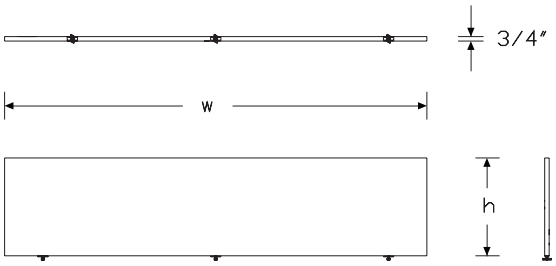

Specification Information

Step 1.

GN A

Step 2. Type

SD desk up A

Step 3. Configuration

R performance rail attachment A

Step 4. Surface Material

L. laminate/thermoplastic edge A
U. laminate/universal edge A

Step 5. Height

42 42" high A
46 46" high A

Step 6. Width

36 36" wide A
39 39" wide A
42 42" wide A
48 48" wide A
54 54" wide A
60 60" wide A
66 66" wide A
72 72" wide A

Prices for Steps 1-6.

		36	39	42	48	54	60
GNSDRL.	**42**	$210	221	232	243	254	265
	46	$227	238	249	260	271	282

		66	72
GNSDRL.	**42**	$275	285
	46	$292	302

GNSDRU.	**42**	$210	221	232	243	254	265
	46	$227	238	249	260	271	282

		66	72
GNSDRU.	**42**	$275	285
	46	$292	302

Layout Studio® Laminate Screen, Desk Up, Performance Rail *continued*

Step 7. Grain Direction

For 36" wide (36), 39" wide (39), 42" wide (42), 48" wide (48), 54" wide (54), or 60" wide (60)

VTG	vertical grain A	+$0
HRG	horizontal grain A	+$0

For 66" wide (66) or 72" wide (72)

HRG	horizontal grain A	+$0

Step 8. Surface Finish

76	light brown walnut A	+$0
8Q	folkstone grey A	+$0
91	white A	+$0
98	studio white A	+$0
CL	cool grey neutral A	+$0
HM	natural maple A	+$0
HP	light anigre A	+$0
HX	aged cherry A	+$0
HY	walnut on cherry A	+$0
LA	light ash A	+$0
LBA	clear on ash A	+$0
LBR	phantom ecru A	+$0
LBS	phantom cocoa A	+$0
LBU	medium matte walnut A	+$0
LBV	warm grey teak A	+$0
LBB	oak on ash A	+$0
LBC	walnut on ash A	+$0
LBD	dark brown walnut A	+$0
LBE	medium red walnut A	+$0
LBF	neutral twill A	+$0
LBG	sarum twill A	+$0
LBH	earthen twill A	+$0
LBJ	graphite twill A	+$0
LBK	pewter mesh A	+$0
LBL	steel mesh A	+$0
LBM	crisp linen A	+$0
LBN	classic linen A	+$0
LBP	casual linen A	+$0
LBQ	white twill A	+$0
LU	soft white A	+$0
WL	sandstone A	+$0
WN	warm grey neutral A	+$0
X1	chalk white A	+$0

Step 9. Edge Finish

For laminate/thermoplastic edge (L.)

76	light brown walnut A	+$0
8Q	folkstone grey A	+$0
91	white A	+$0
98	studio white A	+$0
BU	black umber A	+$0
CL	cool grey neutral A	+$0
HF	inner tone light A	+$0
HM	natural maple A	+$0
HP	light anigre A	+$0
HX	aged cherry A	+$0
HY	walnut on cherry A	+$0
LA	light ash A	+$0
LBA	clear on ash A	+$0
LBR	phantom ecru A	+$0
LBS	phantom cocoa A	+$0
LBU	medium matte walnut A	+$0
LBV	warm grey teak A	+$0
LBB	oak on ash A	+$0
LBC	walnut on ash A	+$0
LBD	dark brown walnut A	+$0
LBE	medium red walnut A	+$0
LBF	neutral twill A	+$0
LBG	sarum twill A	+$0
LBH	earthen twill A	+$0
LBJ	graphite twill A	+$0
LBK	pewter mesh A	+$0
LBL	steel mesh A	+$0
LBM	crisp linen A	+$0
LBN	classic linen A	+$0
LBP	casual linen A	+$0
LBQ	white twill A	+$0
LU	soft white A	+$0
MT	medium tone A	+$0
WL	sandstone A	+$0
WN	warm grey neutral A	+$0

For laminate/universal edge (U.)

PLY	plywood edge A	+$50

Screen - Modesty - Metal, Performance Rail-Attached

GNMRF.

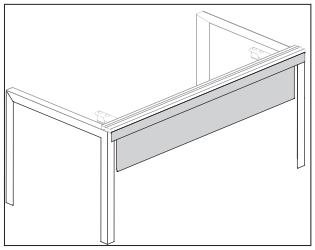

Product Information

Description

This painted metal modesty panel hangs below a single-sided performance rail and includes a painted trim piece that will finish off the back side of the performance rail. Attachment hardware included.

Notes

Width of modesty panel must match width of attached performance rail.

Modesty panel is 9" high. Bottom of panel hangs approximately 11" below the top of the surface.

Dimensions

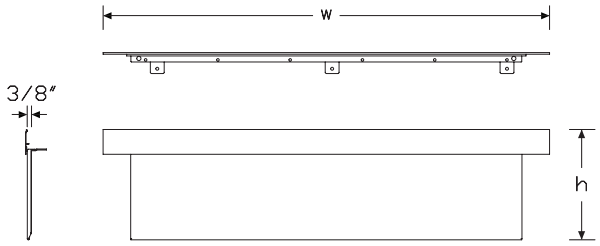

Specification Information

Step 1.

GN A

Step 2. Type

MR performance rail attached A

Step 3. Configuration

F. full module A

Step 4. Height

09 9" tall A

Step 5. Width

42 42" wide A
48 48" wide A
54 54" wide A
60 60" wide A
66 66" wide A
72 72" wide A
78 78" wide A
84 84" wide A
96 96" wide A

Prices for Steps 1-5.

	42	48	54	60	66	72
GNMRF.	**09**	$176	186	196	206	217
227						

	78	84	96
GNMRF.	**09**	$237	248
268			

Step 6. Surface Finish

91	white A	+$0
G1	graphite A	+$0
MS	metallic silver A	+$0

Personal Side Screen, Delineation GNSPXT

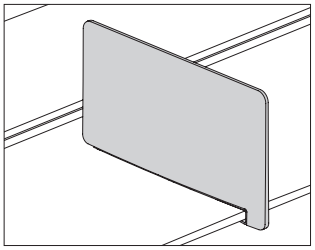

Product Information

Description

This tackable frameless fabric screen provides boundary between workers seated side-by-side, and attaches to the front edge of a squared-edge Layout Studio® surface. It has an edge profile that is complementary to both Pari and flat-edge screens.

Notes

Screen is 13"H×22"D.

Mid-run (M) screen can be placed anywhere along the front edge of a back-to-back application, except directly above an end leg, or above an intermediate leg on a single-sided application. Screen can be moved by the user.

All fabric is railroaded.

Dimensions

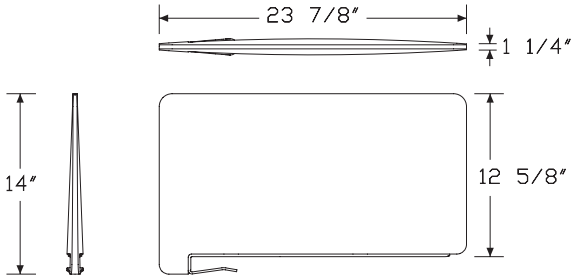

Delineation Mid Screen

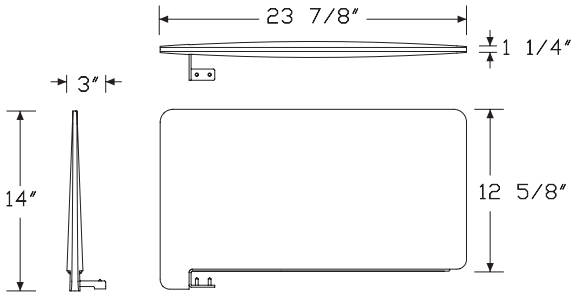

Delineation End Screen, Left

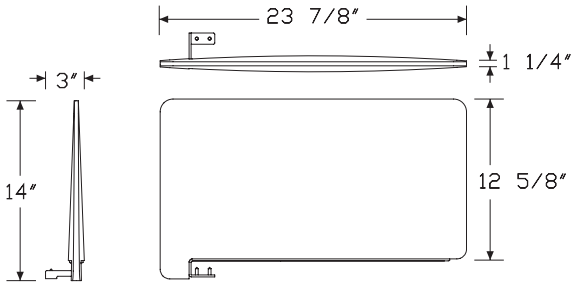

Delineation End Screen, Right

Personal Side Screen, Delineation

continued

Specification Information		
Step 1.		
GN A		
Step 2. Type		
SP	delineation A	
Step 3. Configuration		
XT.	frameless fabric A	
Step 4. Placement		
M	mid-run on back-to-back applications A	
Prices for Steps 1-4.		
GNSPXT. M		$351
Step 5. Bracket Finish		
91	white A	+$0
G1	graphite A	+$0
MS	metallic silver A	+$0
Step 6. Surface Finish		
Price Category C		+$0
Price Category 1		+$0
Price Category 2		+$6
Price Category 3		+$10
Price Category 4		+$21

Gallery Panel, Leg-Attached GNSTA.

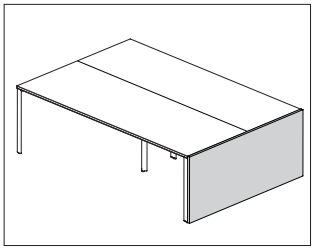

Product Information

Description

This gallery panel attaches to an Engage desk end leg. It has a laminate surface with thermoplastic edge, laminate surface with a thermoplastic backed plywood edge, or veneer surface and edge. Attachment hardware included.

Notes

Top of 29″-high panel aligns with top of a primary surface; top of 42″- and 46″-high panels align with top of a desk up or modesty screen.

All gallery panels are nonhanded. 24″-, 30″-, and 36″-wide panels will work on both right-hand and left-hand single desk end legs.

Grain/pattern direction is vertical for veneer, wood grain laminates, and directional laminates.

Wood grain and directional laminates are available only in 24″-60″ widths.

Dimensions

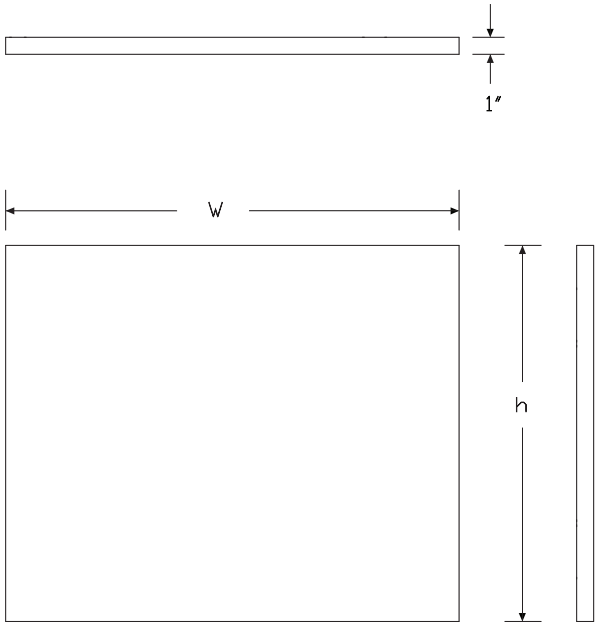

Specification Information

Step 1.

GN

Step 2. Type

ST gallery panel

Step 3. Configuration

A. leg-attached

Step 4. Height

29 29″ high
42 42″ high
46 46″ high

Step 5. Width

24 24″ wide
30 30″ wide
36 36″ wide
48 48″ wide
60 60″ wide
72 72″ wide

Step 6. Surface Material

L laminate top/thermoplastic edge
W veneer
U laminate top/universal edge

Prices for Steps 1-6.

		L	W	U
GNSTA. 29	**24**	$238	521	238
	30	$262	574	262
	36	$285	624	285
	48	$371	815	371
	60	$459	1008	459
	72	$548	1203	548
42	**24**	$280	614	280
	30	$300	659	300
	36	$331	725	331
	48	$447	979	447
	60	$553	1213	553
	72	$660	1447	660

46	**24**	$288	630	288
	30	$310	682	310
	36	$354	777	354
	48	$466	1022	466
	60	$580	1273	580
	72	$691	1519	691

Step 7. Surface Finish

For 24" wide (24), 30" wide (30), 36" wide (36), 48" wide (48), or 60" wide (60) with laminate top/thermoplastic edge (L), or laminate top/universal edge (U)

38	twilight	+$0
39	desert	+$0
76	light brown walnut	+$0
91	white	+$0
98	studio white	+$0
8Q	folkstone grey	+$0
CL	cool grey neutral	+$0
HF	inner tone light	+$0
HM	natural maple	+$0
HP	light anigre	+$0
HT	inner tone	+$0
HX	aged cherry	+$0
HY	walnut on cherry	+$0
LA	light ash	+$0
LBA	clear on ash	+$0
LBR	phantom ecru	+$0
LBS	phantom cocoa	+$0
LBU	medium matte walnut	+$0
LBV	warm grey teak	+$0
LBB	oak on ash	+$0
LBC	walnut on ash	+$0
LBD	dark brown walnut	+$0
LBE	medium red walnut	+$0
LBF	neutral twill	+$0
LBG	sarum twill	+$0
LBH	earthen twill	+$0
LBJ	graphite twill	+$0
LBK	pewter mesh	+$0
LBL	steel mesh	+$0
LBM	crisp linen	+$0
LBN	classic linen	+$0
LBP	casual linen	+$0
LBQ	white twill	+$0
LU	soft white	+$0
WL	sandstone	+$0
WN	warm grey neutral	+$0

Wood Veneer

For veneer (W)

2U	light brown walnut	+$55
40	dark brown walnut	+$55
ET	clear on ash	+$55
EU	oak on ash	+$55
EV	walnut on ash	+$55

Solid-Color Laminate Top/Thermoplastic Edge

For 72" wide (72) with laminate top/thermoplastic edge (L), or laminate top/universal edge (U)

8Q	folkstone grey	+$0
91	white	+$0
98	studio white	+$0
MT	medium tone	+$0
WL	sandstone	+$0
WN	warm grey neutral	+$0

Step 8. Bracket Finish

91	white	+$0
G1	graphite	+$0
MS	metallic silver	+$0

Step 9. Edge Finish

For 24" wide (24), 30" wide (30), 36" wide (36), 48" wide (48), 60" wide (60), or 72" wide (72) with laminate top/thermoplastic edge (L)

76	light brown walnut	+$0
8Q	folkstone grey	+$0
91	white	+$0
98	studio white	+$0
CL	cool grey neutral	+$0
HF	inner tone light	+$0
HM	natural maple	+$0
HP	light anigre	+$0
HT	inner tone	+$0
HX	aged cherry	+$0
HY	walnut on cherry	+$0
LA	light ash	+$0
LBA	clear on ash	+$0
LBR	phantom ecru	+$0
LBS	phantom cocoa	+$0
LBU	medium matte walnut	+$0
LBV	warm grey teak	+$0
LBB	oak on ash	+$0
LBC	walnut on ash	+$0
LBD	dark brown walnut	+$0
LBE	medium red walnut	+$0
LBF	neutral twill	+$0
LBG	sarum twill	+$0
LBH	earthen twill	+$0
LBJ	graphite twill	+$0
LBK	pewter mesh	+$0
LBL	steel mesh	+$0
LBM	crisp linen	+$0
LBN	classic linen	+$0
LBP	casual linen	+$0
LBQ	white twill	+$0
LU	soft white	+$0
WL	sandstone	+$0
WN	warm grey neutral	+$0

For laminate top/universal edge (U)

PLY	plywood edge A	+$50

Pari Screen, End of Run GNSFXT

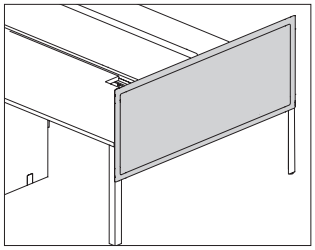

Product Information

Description

This tackable frameless fabric screen attaches to the outside of a Layout Studio® double end leg and provides boundary above and slightly below a surface at the end of a bench or table. Attachment hardware included.

Notes

Screens attach to Layout Studio infrastructure with included hardware; no additional attaching hardware is required.

Screen width must match the depth of leg next to which it will be placed.

All fabric is railroaded.

Screen accepts Customer's Own Material (COM). Yardage is estimated for nondirectional 54"-wide fabrics.

Width—Yardage

48—1.75

60—2.10

For information on multiple quantities or directional fabrics, contact COM Department. See Order Information in Appendices.

Dimensions

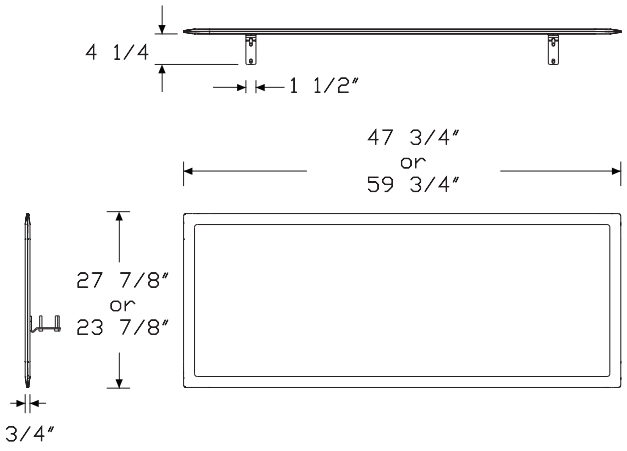

Specification Information

Step 1.

GNSFXT. A

Step 2. Height

42 42" high A

46 46" high A

Step 3. Width

48 48" wide A

60 60" wide A

Prices for Steps 1-3.

		48	60
GNSFXT.	**42**	$641	714
	46	$705	786

Step 4. Bracket Finish

91	white A	+$0
G1	graphite A	+$0
MS	metallic silver A	+$0

Step 5. Surface Finish

Price Category C	+$86
Price Category 1	+$0
Price Category 2	+$15
Price Category 3	+$34
Price Category 4	+$58
Price Category E	+$131

Flat Edge Screen, End of Run GNSFXS

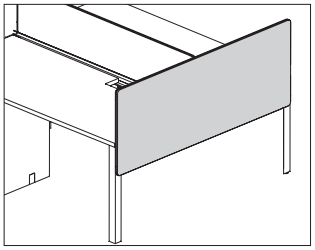

Product Information

Description

This tackable frameless fabric screen attaches to the outside of a Layout Studio® double end leg and provides boundary above and slightly below a surface at the end of a bench or table. Attachment hardware included.

Notes

Screens attach to Layout Studio infrastructure with included hardware; no additional attaching hardware is required.

Screen width must match the depth of leg next to which it will be placed.

All fabric is railroaded.

Screen accepts Customer's Own Material (COM). Yardage is estimated for nondirectional 54"-wide fabrics.

Width—Yardage

48—1.75

60—2.10

For information on multiple quantities or directional fabrics, contact COM Department. See Order Information in Appendices.

Dimensions

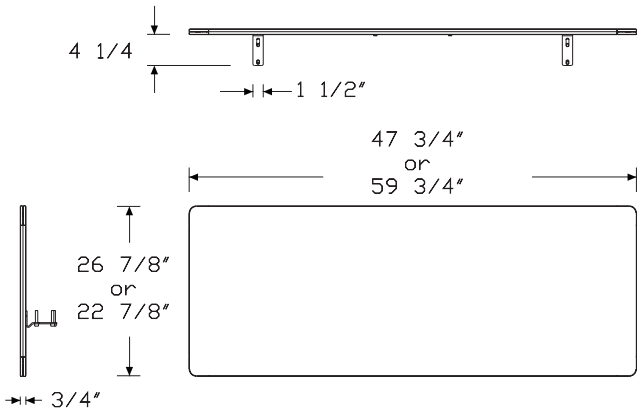

Specification Information

Step 1.

GNSFXS. A

Step 2. Height

42	42" high	A
46	46" high	A

Step 3. Width

48	48" wide	A
60	60" wide	A

Prices for Steps 1-3.

		48	**60**
GNSFXS.	**42**	$400	500
	46	$450	550

Step 4. Bracket Finish

91	white	A	+$0
G1	graphite	A	+$0
MS	metallic silver	A	+$0

Step 5. Surface Finish

Price Category C	+$85
Price Category 1	+$0
Price Category 2	+$15
Price Category 3	+$34
Price Category 4	+$58
Price Category E	+$131

Pari Screen, Delineation, Performance Rail

GNSPXP

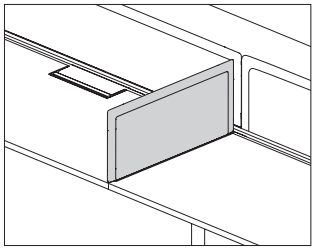

Product Information

Description

This tackable fabric screen provides boundary between workers seated side-by-side, and attaches to a squared-edge Layout Studio® surface when a performance rail is used.

Notes

All fabric is railroaded.

For screen attachment in middle of run, use either left-hand bracket (GNSD.PRxxEL) or right-hand bracket (GNSD.PRxxER), ordered separately.

Screen accepts Customer's Own Material (COM). Yardage is estimated for nondirectional 54"-wide fabrics.

Width—Yardage

24—0.92

30—1.10

For information on multiple quantities or directional fabrics, contact COM Department. See Order Information in Appendices.

Dimensions

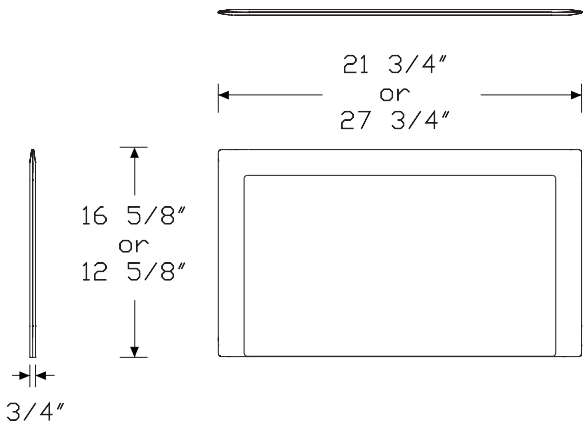

Specification Information

Step 1.

GNSPXP.R A

Step 2. Height

42 42" high A

46 46" high A

Step 3. Width

24 24" wide A

30 30" wide A

Step 4. Location

EL end-of-run, left-hand A

ER end-of-run, right-hand A

Prices for Steps 1-4.

		EL	ER
GNSPXP.R 42	**24**	$478	478
	30	$493	493
46	**24**	$503	503
	30	$522	522

Step 5. Bracket Finish

MS metallic silver A +$0

Step 6. Surface Finish

Price Category E	+$0
Price Category C	+$48
Price Category 1	+$0
Price Category 2	+$8
Price Category 3	+$19
Price Category 4	+$32

Flat Edge Screen, Delineation, Performance Rail — GNSPXS

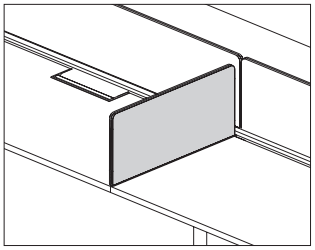

Product Information

Description

This tackable fabric screen provides boundary between workers seated side-by-side, and attaches to a squared-edge Layout Studio® surface when a performance rail is used.

Notes

All fabric is railroaded.

For screen attachment in middle of run, use either left-hand bracket (GNSD.SRxxEL) or right-hand bracket (GNSD.SRxxER), ordered separately.

Screen accepts Customer's Own Material (COM). Yardage is estimated for nondirectional 54"-wide fabrics.

Width—Yardage

24—0.92

30—1.10

For information on multiple quantities or directional fabrics, contact COM Department. See Order Information in Appendices.

Dimensions

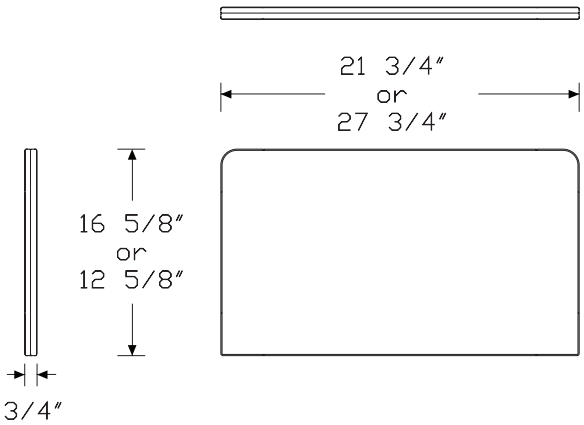

Specification Information

Step 1.

GNSPXS.R A

Step 2. Height

42 42" high A

46 46" high A

Step 3. Width

24 24" wide A

30 30" wide A

Step 4. Location

EL end-of-run, left-hand A

ER end-of-run, right-hand A

Prices for Steps 1-4.

	EL	ER
GNSPXS.R 42 24	$306	306
30	$332	332
46 24	$332	332
30	$361	361

Step 5. Bracket Finish

MS	metallic silver A	+$0

Step 6. Surface Finish

Price Category C	+$45
Price Category 1	+$0
Price Category 2	+$6
Price Category 3	+$10
Price Category 4	+$21
Price Category E	+$0

Screen Bracket, Delineation, Pari or Flat Edge GNSD.

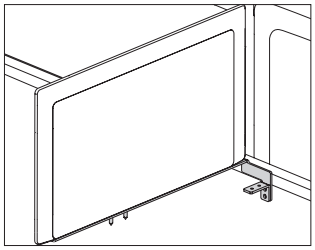

Product Information

Description

This hardware converts a Pari or flat edge delineation screen from left-hand or right-hand attachment to the opposite attachment.

Notes

For screen attachment in middle of run, use either left-hand (EL) or right-hand (ER) bracket.

Order Pari or flat edge delineation screen (GNSPXP., GNSPXP.R, GNSPXS., GNSPXS.R) separately.

Dimensions

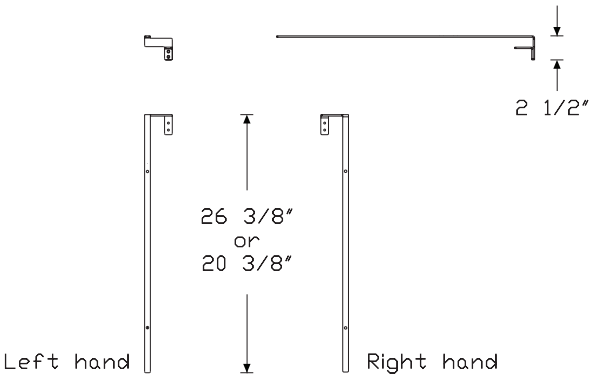

Pari screen with performance rail

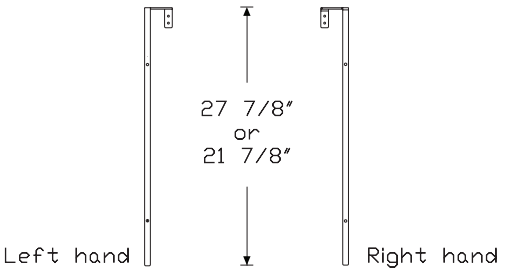

Flat edge screen with performance rail

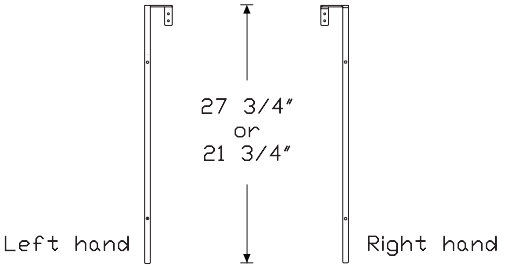

Pari screen, no performance rail

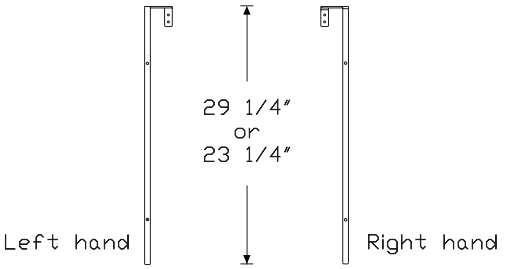

Flat edge screen, no performance rail

Screen Bracket, Delineation, Pari or Flat Edge *continued*

Specification Information

Step 1.

GN A

Step 2. Type

SD.P Pari delineation screen bracket A

SD.S flat edge delineation screen bracket A

Step 3. Performance Rail

R performance rail A

N no performance rail A

Step 4. Depth

24 24" wide A

30 30" wide A

Step 5. Location

EL end-of-run, left-hand A

ER end-of-run, right-hand A

Prices for Steps 1-5.

			EL	ER
GNSD.P	**R**	**24**	$51	51
		30	$51	51
	N	**24**	$51	51
		30	$51	51

			EL	ER
GNSD.S	**R**	**24**	$51	51
		30	$51	51
	N	**24**	$51	51
		30	$51	51

Step 6. Bracket Finish

MS metallic silver A +$0

Individual Cubby L2EC.

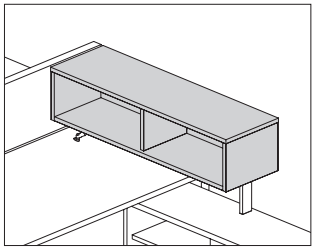

Product Information

Description

This all laminate or veneer cubby attaches to stanchions and provides open storage accessible from 1 side of the cubby. The inbound stanchion either sits on top of a work surface and attaches to the underside of the surface, or attaches to a Layout Studio® performance rail. The outbound stanchion rests on top of a 22″-high Tu® Wood credenza.

Notes

Surface-attached cubby cannot be used on a Layout Studio sliding surface.

Order stanchion kit for surface attachment (LSS.) or Layout Studio performance rail attachment (L2SS.) separately.

Can be used only in perpendicular application.

Order optional accessories separately:

- Tackboard (LLCT.)
- Whiteboard (LLCW.)
- Magnet board (LLCM.)

Dimensions

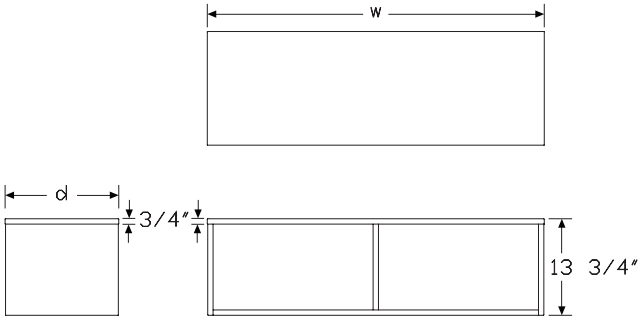

Specification Information

Step 1.

L2EC.

Step 2. Attachment

R Layout Studio performance rail attachment

S surface attachment

Step 3. Height

09 9.75″ high

13 13.75″ high

Step 4. Width

For Layout Studio performance rail attachment (R)

36 36″ wide

42 42″ wide

48 48″ wide

For surface attachment (S)

48 48″ wide

60 60″ wide

Step 5. Depth

12 12 1/2″ deep

Step 6. Surface Material

L laminate

V veneer

Prices for Steps 1-6.

			3612L	3612V	4212L	4212V	6012L	6012V
L2EC.	**R**	**09**	$910	1750	963	1900	—	—
		13	$963	1800	1017	1950	—	—
	S	**09**	—	—	—	—	$1124	2150
		13	—	—	—	—	$1177	2200

			4812L	4812V
L2EC.	**R**	**09**	$1017	1950
		13	$1070	2000
	S	**09**	$1017	1950
		13	$1070	2000

Step 7. Case Finish

For laminate (L)

8Q	folkstone grey	+$0
91	white	+$0
98	studio white	+$0
CL	cool grey neutral	+$0
LU	soft white	+$0
WL	sandstone	+$0
WN	warm grey neutral	+$0

For laminate (L)

LBM	crisp linen	+$0
LBN	classic linen	+$0
LBP	casual linen	+$0

For laminate (L)

LBK	pewter mesh	+$0
LBL	steel mesh	+$0

For laminate (L)

LBF	neutral twill	+$0
LBG	sarum twill	+$0
LBH	earthen twill	+$0
LBJ	graphite twill	+$0
LBQ	white twill	+$0

For laminate (L)

76	light brown walnut	+$0
HM	natural maple	+$0
HP	light anigre	+$0
HX	aged cherry	+$0
HY	walnut on cherry	+$0
LBA	clear on ash	+$0
LBR	phantom ecru	+$0
LBS	phantom cocoa	+$0
LBU	medium matte walnut	+$0
LBV	warm grey teak	+$0
LBB	oak on ash	+$0
LBC	walnut on ash	+$0
LBD	dark brown walnut	+$0
LBE	medium red walnut	+$0

For veneer (V)

2U	light brown walnut	+$85
40	dark brown walnut	+$85
ED	aged cherry	+$85
EK	medium red walnut	+$85
ET	clear on ash	+$85
EU	oak on ash	+$85
EV	walnut on ash	+$85
EW	medium matte walnut	+$85
UL	natural maple	+$85
UX	walnut on cherry	+$85

Shared Cubby L2EY.

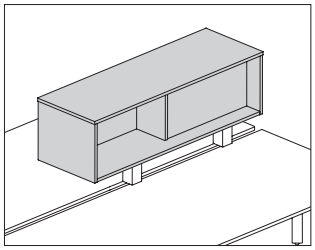

Product Information

Description

This cubby has a laminate or veneer shell and septum, and has alternate-facing openings to provide storage to workers on both sides of the unit, either across from each other or side-by-side. Cubby is mounted using stanchions which are specified separately.

Notes

12 1/2"-deep cubby used in a parallel application will attach to Layout Studio® beams. Single cubby requires 1 end stanchion kit (LSS.SE). Multiple cubbies will require the end stanchion kit, along with a shared stanchion (LSS.SM) wherever 2 cubbies meet.

12 1/2"-deep cubby used in a perpendicular application will attach to the back edge of a work surface on one end of the cubby and rest on top of a 22"-high credenza on the other end of the cubby. Specify 1 credenza/work surface mounted stanchion kit (LSS.CD) for each cubby.

16"-deep cubby is 12" deep on half and 3" deep on the other half.

To attach to Layout Studio performance rail, order stanchion kits (L2SS.) separately.

For 16" deep cubby, 24"-wide and 30"-wide cubbies can only be used in a parallel application. 36"-72" wide cubbies can be used in either a parallel or perpendicular application.

To cover interior septum on 1 side of 16"D × 13 1/2"H cubby (L2EY.x1613xx) with a painted insert, order insert (LLCM.Z13xxP) separately.

Dimensions

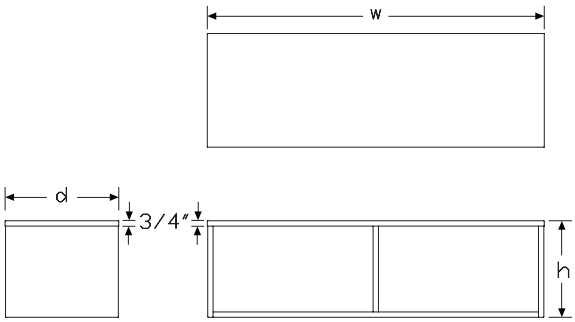

Specification Information

Step 1.

L2EY.

Step 2. Attachment

B	parallel application, Layout Studio beam attachment
S	perpendicular application, surface attachment
R	Layout Studio performance rail attachment

Step 3. Depth

For parallel application, Layout Studio beam attachment (B) or perpendicular application, surface attachment (S)

12	12.5" deep

For Layout Studio performance rail attachment (R)

16	16" deep

Step 4. Height

For 12.5" deep (12)

09	9.75" high
13	13.75" high

For 16" deep (16)

13	13.75" high

Step 5. Width

For Layout Studio performance rail attachment (R)

24	24" wide
30	30" wide
36	36" wide
42	42" wide
48	48" wide

For perpendicular application, surface attachment (S)

48	48" wide
60	60" wide

For parallel application, Layout Studio beam attachment (B)

36	36" wide
42	42" wide
48	48" wide
60	60" wide
72	72" wide

Step 6. Position	
L	opening left
R	opening right

Step 7. Surface Material	
L	laminate
V	veneer

Prices for Steps 1-7.

			0936LL	0936LV	0936RL	0936RV	0942LL	0942LV
L2EY.	**B**	**12**	$861	1705	861	1705	968	1905

			0942RL	0942RV	0960LL	0960LV	0960RL	0960RV
L2EY.	**B**	**12**	$968	1905	1148	2173	1148	2173
	S	**12**	—	—	$1148	2173	1148	2173

			0948LL	0948LV	0948RL	0948RV	0972LL	0972LV
L2EY.	**B**	**12**	$1014	1948	1014	1948	1282	2398
	S	**12**	$1024	1948	1024	1948	—	—

			0972RL	0972RV	1324LL	1324LV	1324RL	1324RV
L2EY.	**B**	**12**	$1282	2398	—	—	—	—
	R	**16**	—	—	$864	1700	856	1700

			1330LL	1330LV	1330RL	1330RV	1336LL	1336LV
L2EY.	**B**	**12**	—	—	—	—	$910	1750
	R	**16**	$972	1800	963	1800	1080	1900

			1336RL	1336RV	1342LL	1342LV	1342RL	1342RV
L2EY.	**B**	**12**	$910	1750	1017	1950	1017	1950
	R	**16**	$1080	1900	1188	2100	1188	2100

			1360LL	1360LV	1360RL	1360RV	1348LL	1348LV
L2EY.	**B**	**12**	$1196	2218	1196	2218	1063	1993
	S	**12**	$1196	2218	1207	2218	1072	1993
	R	**16**	—	—	—	—	$1296	2200

			1348RL	1348RV	1372LL	1372LV	1372RL	1372RV
L2EY.	**B**	**12**	$1063	1993	1342	2443	1342	2443
	S	**12**	$1072	1993	—	—	—	—
	R	**16**	$1296	2200	—	—	—	—

Step 8. Case Finish

For laminate (L)

LBM	crisp linen	+$0
LBN	classic linen	+$0
LBP	casual linen	+$0

For laminate (L)

LBK	pewter mesh	+$0
LBL	steel mesh	+$0

For laminate (L)

8Q	folkstone grey	+$0
91	white	+$0
98	studio white	+$0
CL	cool grey neutral	+$0
LU	soft white	+$0
WL	sandstone	+$0
WN	warm grey neutral	+$0

For laminate (L)

LBF	neutral twill	+$0
LBG	sarum twill	+$0
LBH	earthen twill	+$0
LBJ	graphite twill	+$0
LBQ	white twill	+$0

For laminate (L)

76	light brown walnut	+$0
HM	natural maple	+$0
HP	light anigre	+$0
HX	aged cherry	+$0
HY	walnut on cherry	+$0
LBA	clear on ash	+$0
LBR	phantom ecru	+$0
LBS	phantom cocoa	+$0
LBU	medium matte walnut	+$0
LBV	warm grey teak	+$0
LBB	oak on ash	+$0
LBC	walnut on ash	+$0
LBD	dark brown walnut	+$0
LBE	medium red walnut	+$0

For veneer (V)		
2U	light brown walnut	+$85
40	dark brown walnut	+$85
ED	aged cherry	+$85
EK	medium red walnut	+$85
ET	clear on ash	+$85
EU	oak on ash	+$85
EV	walnut on ash	+$85
EW	medium matte walnut	+$85
UL	natural maple	+$85
UX	walnut on cherry	+$85

Laminate Suspended End Cubby L2ES.

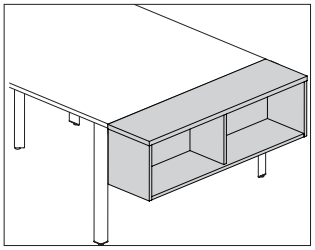

Product Information

Description

This all laminate or veneer cubby attaches to the outside of a Layout Studio® double desk end leg and provides open storage. The top of the cubby aligns with the adjacent surface(s). Each cubby has a center divider.

Notes

Specify cubby width to match depth of leg to which it will attach.

Order hardware kit (LSH.B) separately.

Grain direction is vertical on front and sides, and horizontal on top and back. Vertical grain direction on the top is available via Made-to-Measure or the Vary Easy Program.

Dimensions

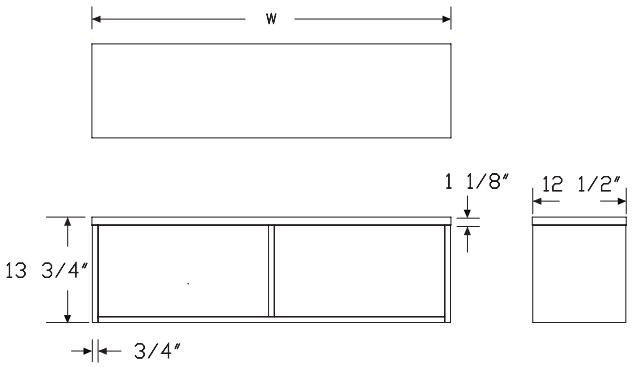

Specification Information

Step 1.

L2ES.

Step 2. Application

B suspended below surface

Step 3. Height

13 13.75" high

Step 4. Width

48 48" wide

60 60" wide

Step 5. Depth

12 12.5" deep

Step 6. Surface Material

L laminate

V veneer

Prices for Steps 1-6.

			4812L	4812V	6012L	6012V
L2ES.	**B**	**13**	$1080	2000	1188	2200

Step 7. Top Finish

Solid-Color Laminate

For laminate (L)

8Q	folkstone grey	+$0
91	white	+$0
98	studio white	+$0
CL	cool grey neutral	+$0
LU	soft white	+$0
MT	medium tone	+$0
WL	sandstone	+$0
WN	warm grey neutral	+$0

Linen Laminate

For laminate (L)

LBM	crisp linen	+$0
LBN	classic linen	+$0
LBP	casual linen	+$0

Laminate Suspended End Cubby

continued

Mesh Laminate

For laminate (L)

LBK	pewter mesh	+$0
LBL	steel mesh	+$0

Twill Laminate

For laminate (L)

LBF	neutral twill	+$0
LBG	sarum twill	+$0
LBH	earthen twill	+$0
LBJ	graphite twill	+$0
LBQ	white twill	+$0

Wood-Grain Laminate

For laminate (L)

76	light brown walnut	+$0
HM	natural maple	+$0
HP	light anigre	+$0
HX	aged cherry	+$0
HY	walnut on cherry	+$0
LBA	clear on ash	+$0
LBR	phantom ecru	+$0
LBS	phantom cocoa	+$0
LBU	medium matte walnut	+$0
LBV	warm grey teak	+$0
LBB	oak on ash	+$0
LBC	walnut on ash	+$0
LBD	dark brown walnut	+$0
LBE	medium red walnut	+$0

For veneer (V)

2U	light brown walnut	+$85
40	dark brown walnut	+$85
ED	aged cherry	+$85
EK	medium red walnut	+$85
ET	clear on ash	+$85
EU	oak on ash	+$85
EV	walnut on ash	+$85
EW	medium matte walnut	+$85
UL	natural maple	+$85
UX	walnut on cherry	+$85

Step 8. Case Finish

Solid-Color Laminate

For laminate (L)

8Q	folkstone grey	+$0
91	white	+$0
98	studio white	+$0
CL	cool grey neutral	+$0
LU	soft white	+$0
MT	medium tone	+$0
WL	sandstone	+$0
WN	warm grey neutral	+$0

Low Sheen Finishes

For laminate (L)

LBM	crisp linen	+$0
LBN	classic linen	+$0
LBP	casual linen	+$0

Mesh Laminate

For laminate (L)

LBK	pewter mesh	+$0
LBL	steel mesh	+$0

Twill Laminate

For laminate (L)

LBF	neutral twill	+$0
LBG	sarum twill	+$0
LBH	earthen twill	+$0
LBJ	graphite twill	+$0
LBQ	white twill	+$0

Laminate Suspended End Cubby

continued

Wood-Grain Laminate

For laminate (L)

76	light brown walnut	+$0
HM	natural maple	+$0
HP	light anigre	+$0
HX	aged cherry	+$0
HY	walnut on cherry	+$0
LBA	clear on ash	+$0
LBR	phantom ecru	+$0
LBS	phantom cocoa	+$0
LBU	medium matte walnut	+$0
LBV	warm grey teak	+$0
LBB	oak on ash	+$0
LBC	walnut on ash	+$0
LBD	dark brown walnut	+$0
LBE	medium red walnut	+$0

For veneer (V)

2U	light brown walnut	+$85
40	dark brown walnut	+$85
ED	aged cherry	+$85
EK	medium red walnut	+$85
ET	clear on ash	+$85
EU	oak on ash	+$85
EV	walnut on ash	+$85
EW	medium matte walnut	+$85
UL	natural maple	+$85
UX	walnut on cherry	+$85

Stanchion Kit, Performance Rail L2SS.

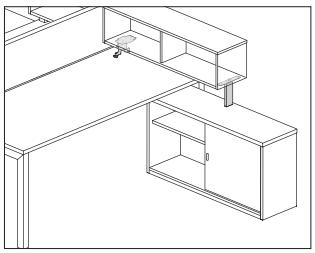

Product Information

Description

These stanchions elevate and support the shared cubby and individual cubby when attaching to a Layout Studio® performance rail. The center application kit has 1 stanchion, and the perpendicular application kit has 2 stanchions. Attachment hardware included.

Notes

Specify cubby (L2EY., L2EC.) separately.

The center application, rail-attached end stanchion (CE) supports 1 end of a single cubby.

The center application, rail-attached shared stanchion (CS) supports the end of 2 cubbies that are placed side-by-side.

The perpendicular application, rail and credenza supported stanchion kit (PRC) supports both ends of a cubby when placed perpendicular to a bench.

Dimensions

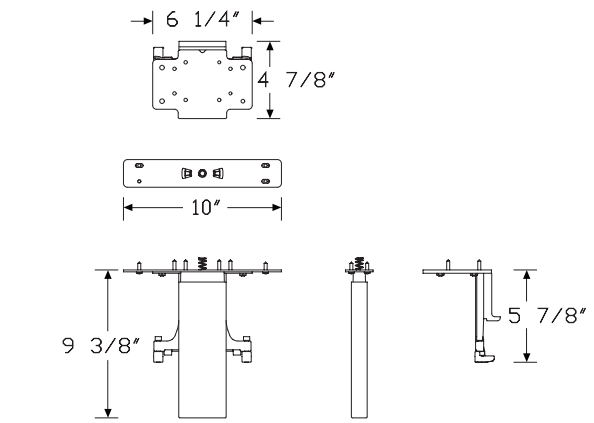

Perpendicular Rail and Cradenza Support

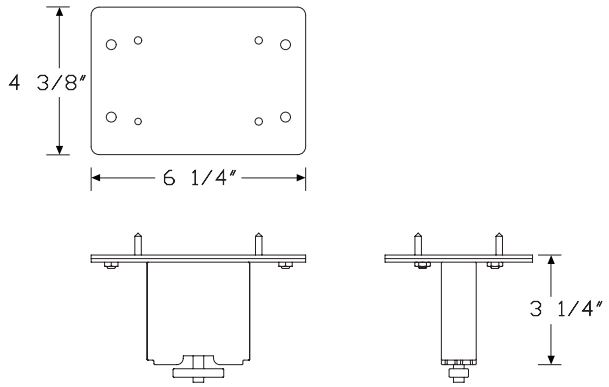

End Center Rail

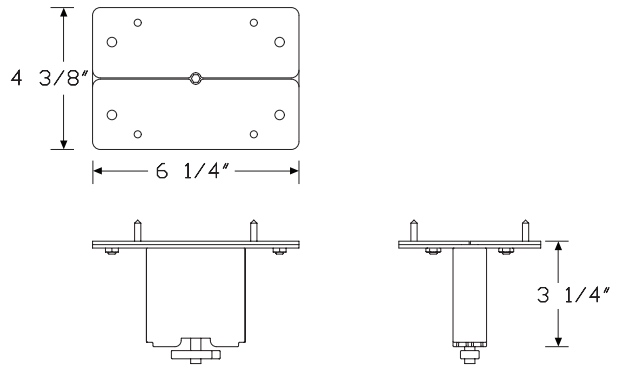

Shared Center Rail

Stanchion Kit, Performance Rail

continued

Specification Information

Step 1.

L2SS.

Step 2. Application

CE	center application, rail-attached, end
CS	center application, rail-attached, shared
PRC	perpendicular application, rail and credenza supported

Prices for Steps 1-2.

L2SS.	**CE**	$210
	CS	$214
	PRC	$551

Step 3. Finish

Metallic Paint

MS	metallic silver	+$0

Sand Texture Paint

91	white	+$0
BK	black	+$0
G1	graphite	+$0

Suspended End Cubby Hardware Kit LSH.

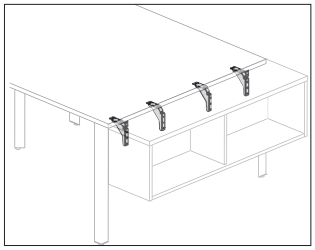

Product Information

Description

This hardware kit attaches a suspended end cubby to the outside of a Layout Studio® double desk end leg.

Notes

Order suspended end cubby (L2ES.B) separately.

Dimensions

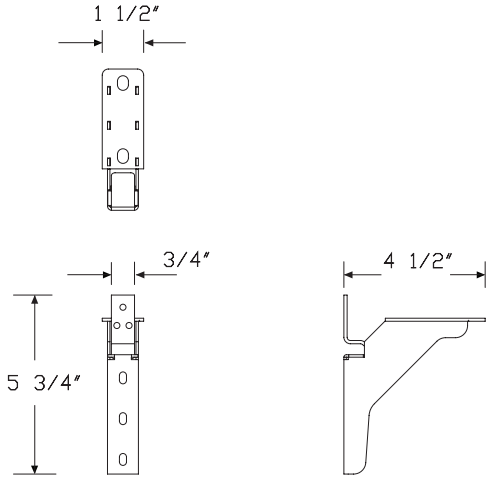

Specification Information

Step 1.

LSH. A

Step 2. Application

B	suspended below surface A	

Prices for Steps 1-2.

LSH.	**B**	$358

Step 3. Finish

Metallic Paint

MS	metallic silver A	+$0

Sand Texture Paint

91	white A	+$0
BK	black A	+$0
G1	graphite A	+$0

Storage Attachment Kit, End Leg L2SL.

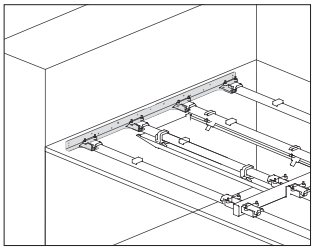

Product Information

Description

This hardware kit attaches Layout Studio® beams to a Tu® Wood freestanding storage unit to allow the storage unit to replace a Layout Studio double end leg. The kit is available for use with a 48"-wide or a 60"-wide freestanding storage case. Finish is cool grey neutral.

Notes

To replace a Layout Studio double leg with a storage unit, order a Tu Wood end-of-run cabinet (L2ER.) separately.

Specify storage base option to match base option on storage unit.

Dimensions

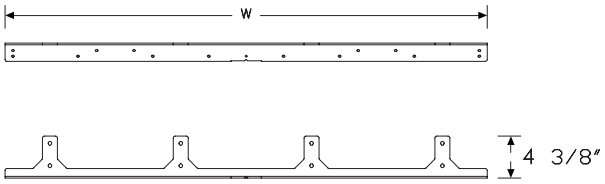

Specification Information

Step 1.

L2SL. A

Step 2. Depth

48	48" double end leg A	
60	60" double end leg A	

Prices for Steps 1-2.

L2SL.	**48**	$326
	60	$351

Step 3. Storage Base Option

1	base A	+$0
3	base with fronts to floor A	+$0
5	foot A	+$0
9	c-foot A	+$0

Shared Cubby Insert LLCM.

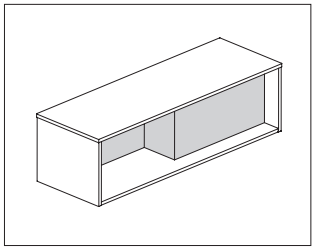

Product Information

Description

This painted metal insert is placed inside a 16″-deep shared cubby to completely cover the laminate septum on 1 side of the cubby. Attachment hardware included.

Notes

To cover both sides of a shared cubby septum, specify 2 inserts.

Paint finish is smooth.

Dimensions

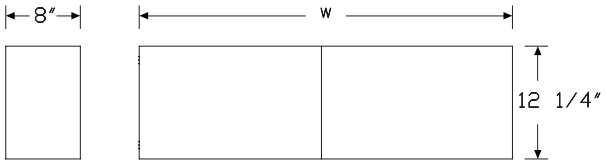

Specification Information

Step 1.

LLCM. A

Step 2. Type

Z 16″ deep shared cubby insert A

Step 3. Height

13 13.75″ high A

Step 4. Width

24 24″ wide A
30 30″ wide A
36 36″ wide A
42 42″ wide A
48 48″ wide A

Step 5. Surface Material

P painted metal A

Prices for Steps 1-5.

	24P	30P	36P	42P	48P
LLCM. Z 13	$252	268	284	299	315

Step 6. Finish

Metallic Paint

CN metallic champagne A +$0
MS metallic silver A +$0

Sand Texture Paint

BK black A +$0

Smooth Paint

8Q folkstone grey A +$0
91 white A +$0
G1 graphite A +$0
WL sandstone A +$0

Engage Leg, Desk End, Single

GNLFEL
GNLFER

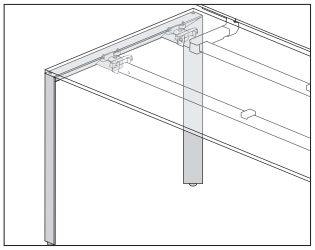

Product Information

Description

These single desk end legs provide support for individual tables or the ends of single-sided benches and returns. These fixed height legs provide 1 3/4" of leveling adjustment.

Notes

Size of legs must match the depth of the surface being supported.

Dimensions

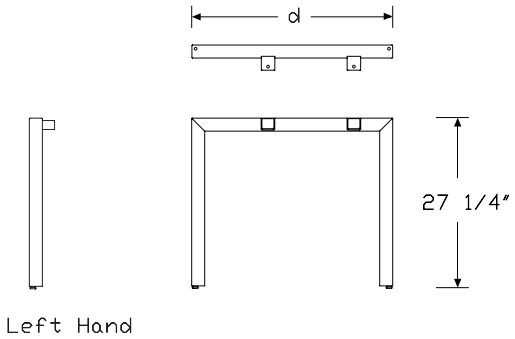

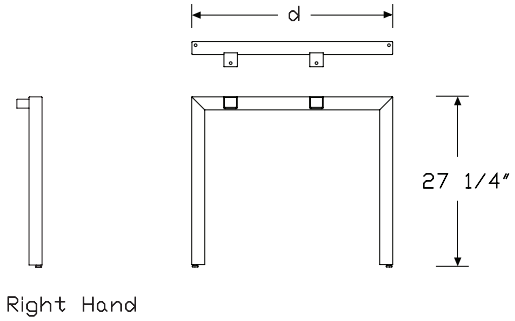

Specification Information

Step 1.

GN

Step 2. Leg Type

LF	fixed height

Step 3. Application

EL.	left hand
ER.	right hand

Step 4. Depth

24	24" deep
30	30" deep
36	36" deep

Prices for Steps 1-4.

GNLFEL.	**24**	$278
	30	$282
	36	$286
GNLFER.	**24**	$278
	30	$282
	36	$286

Step 5. Leg Finish

91	white	+$0
G1	graphite	+$0
MS	metallic silver	+$0

Engage Leg, Desk End, Double GNLFEN

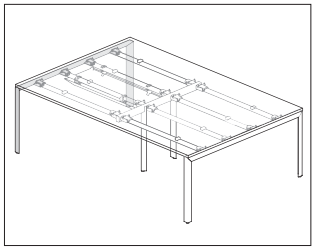

Product Information

Description

The double desk end leg provides support at either end of a back-to-back bench application, or a project table. This fixed height leg provides 1 3/4″ of leveling adjustment.

Notes

Size of the leg must match the combined depth of the 2 primary surfaces or 1 project table surface being supported.

Dimensions

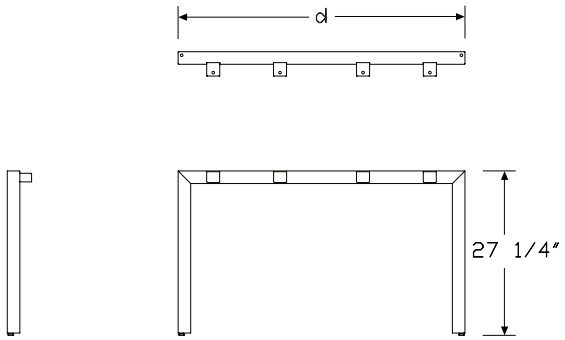

Specification Information

Step 1.

GN

Step 2. Leg Type

LF	fixed height

Step 3. Application

EN.	desk end double

Step 4. Depth

48	48″ deep
60	60″ deep
72	72″ deep

Prices for Steps 1-4.

GNLFEN.	**48**	$369
	60	$392
	72	$414

Step 5. Leg Finish

91	white	+$0
G1	graphite	+$0
MS	metallic silver	+$0

Engage Leg, Intermediate Desk GNLFSN

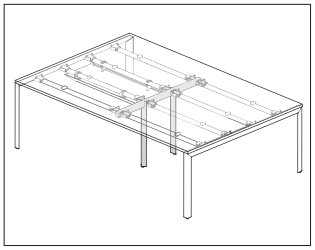

Product Information

Description

The intermediate desk leg provides support within single-sided, back-to-back bench or project table applications. This fixed height leg provides 1¾″ of leveling adjustment.

Notes

Size of the leg must match the depth of the surfaces being supported.

Dimensions

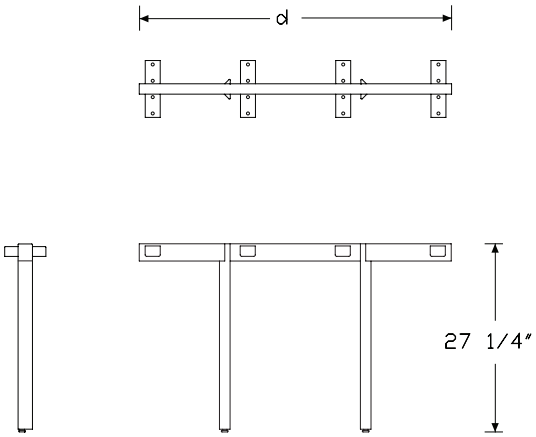

Specification Information

Step 1.

GN

Step 2. Leg Type

LF	fixed height

Step 3. Application

SN.	intermediate desk

Step 4. Depth

24	24″ deep
30	30″ deep
36	36″ deep
48	48″ deep
60	60″ deep
72	72″ deep

Prices for Steps 1-4.

GNLFSN.	**24**	$303
	30	$308
	36	$314
	48	$387
	60	$403
	72	$414

Step 5. Leg Finish

91	white	+$0
G1	graphite	+$0
MS	metallic silver	+$0

Engage Leg, Asymmetrical Desk End, Double

GNLFAL
GNLFAR

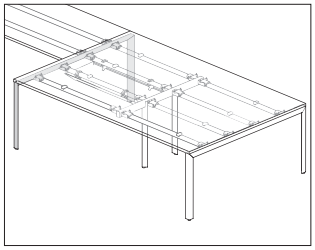

Product Information

Description

This leg supports an asymmetrical application, with a back-to-back application on 1 side of the leg and a single surface on the other side of the leg. It is fixed height, and provides 1 3/4" of leveling adjustment.

Notes

Size of the leg must match the depth of the surfaces being supported.

Dimensions

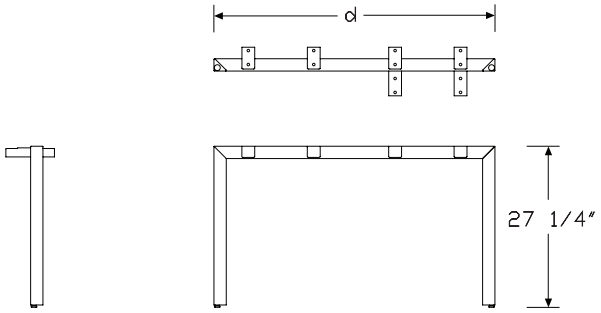

Left Hand

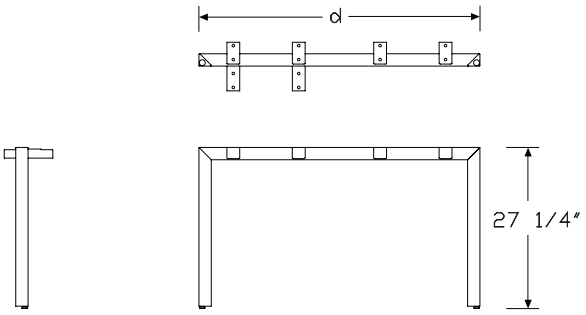

Right Hand

Specification Information

Step 1.

GN

Step 2. Leg Type

LF	fixed height

Step 3. Application

AL.	left hand
AR.	right hand

Step 4. Depth

48	48" deep
60	60" deep
72	72" deep

Prices for Steps 1-4.

GNLFAL.	**48**	$395
	60	$418
	72	$435
GNLFAR.	**48**	$395
	60	$418
	72	$435

Step 5. Leg Finish

91	white	+$0
G1	graphite	+$0
MS	metallic silver	+$0

Engage Leg, Desk End, Double, Meeting End

GNLFPN

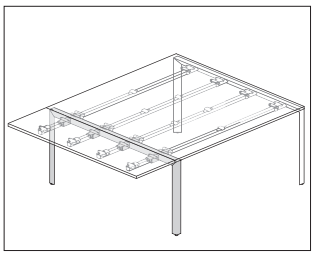

Product Information

Description

This leg supports the use of meeting end beams and surface at the end of a back-to-back bench.

Notes

Size of leg must match the combined depth of the 2 primary surfaces or 1 project table surface being supported.

Order meeting end beams (GNBM.) and surface (GNTDx.) separately.

Dimensions

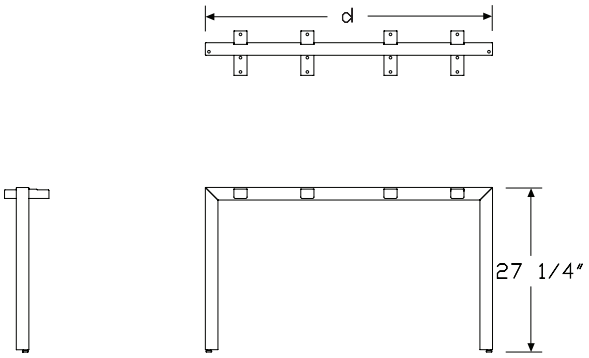

Specification Information

Step 1.

GN

Step 2. Leg Type

LF	fixed height

Step 3. Application

PN.	meeting end

Step 4. Depth

48	48" deep
60	60" deep
72	72" deep

Prices for Steps 1-4.

GNLFPN.	**48**	$385
	60	$429
	72	$462

Step 5. Leg Finish

91	white	+$0
G1	graphite	+$0
MS	metallic silver	+$0

Engage Leg, Corner Leg GNLFCN

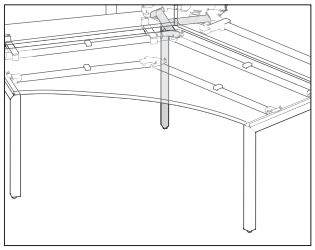

Product Information

Description

This leg provides support at the back corner of a 120° surface. It is fixed height, and provides 1¾″ of leveling adjustment.

Notes

Specify the leg based on the number of surfaces to be supported (GNLFCN.1 supports 1 surface, GNLFCN.2 supports 2 surfaces, and GNLFCN.3 supports 3 surfaces.).

Dimensions

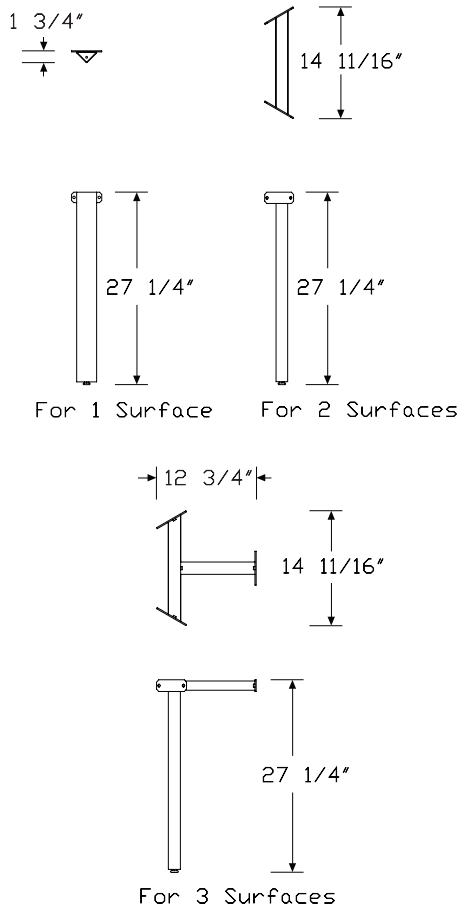

Specification Information

Step 1.

GN

Step 2. Leg Type

LF	fixed height

Step 3. Application

CN.	corner leg

Step 4. Surface Quantity

1	supports one surface
2	supports two surfaces
3	supports three surfaces

Prices for Steps 1-4.

GNLFCN.	**1**	$118
	2	$210
	3	$279

Step 5. Leg Finish

91	white	+$0
G1	graphite	+$0
MS	metallic silver	+$0

Engage Leg, Back-to-Back Bracing Leg GNLFBN

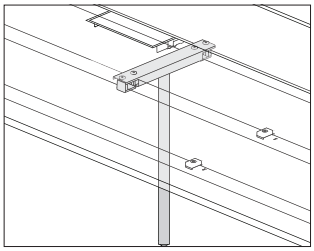

Product Information

Description

This stabilizer leg provides support within a back-to-back bench or project table application, where no intermediate leg is being used. This fixed height leg provides 1¾" of leveling adjustment.

Notes

This leg is only used with back-to-back or project table applications that have 1 beam width spanning between 2 end legs.

Dimensions

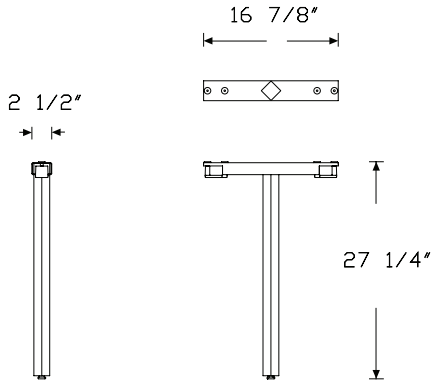

Specification Information

Step 1.

GN A

Step 2. Leg Type

LF	fixed height A	

Step 3. Application

BN.	back-to-back bracing leg A	

Prices for Steps 1-3.

GNLFBN.		$249

Step 4. Leg Finish

91	white A	+$0
G1	graphite A	+$0
MS	metallic silver A	+$0

Engage Leg, Standing End, Double — GNLSEN

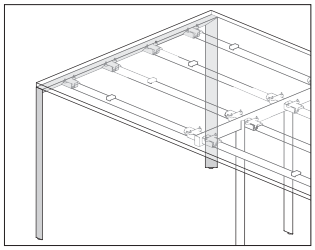

Product Information

Description

This double standing height end leg provides support at either end of a back-to-back bench or project table application. This fixed height leg provides 1 3/4″ of leveling adjustment.

Notes

Size of leg must match the combined depth of the 2 primary surfaces or 1 project table surface being supported.

Dimensions

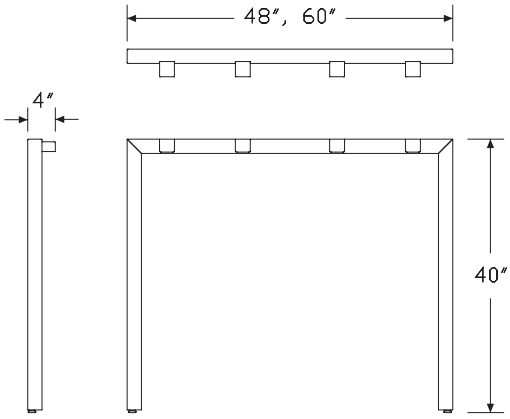

Specification Information

Step 1.

GN A

Step 2. Leg

LS standing height A

Step 3. Application

EN. desk end double A

Step 4. Size

48 48″ deep A

60 60″ deep A

Prices for Steps 1-4.

GNLSEN.	**48**	$536
	60	$569

Step 5. Leg Finish

91	white A	+$0
G1	graphite A	+$0
MS	metallic silver A	+$0

Engage Leg, Intermediate Standing — GNLSSN

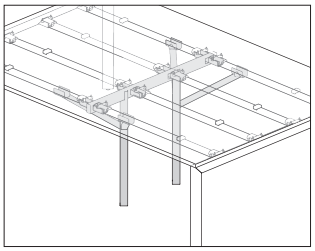

Product Information

Description

This intermediate standing height leg provides support in a back-to-back bench or project table application. This fixed height leg provides 1 3/4″ of leveling adjustment. Leg includes all bracing, structural supports, and hardware required for a standing height application.

Notes

Size of leg must match the combined depth of the 2 primary surfaces or 1 project table surface being supported.

Dimensions

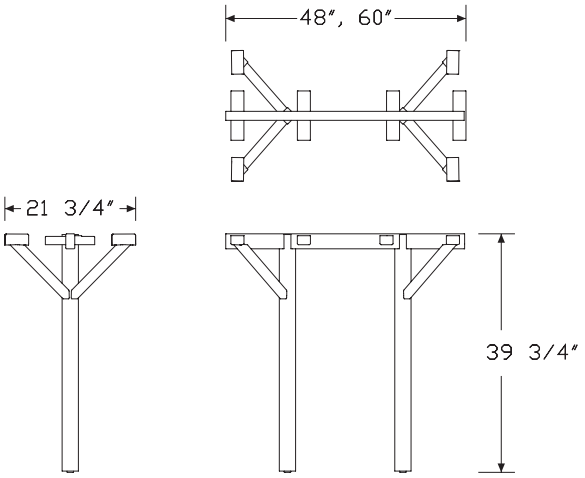

Specification Information

Step 1.

GN A

Step 2. Leg

LS standing height A

Step 3. Application

SN. intermediate A

Step 4. Size

48 48″ deep A

60 60″ deep A

Prices for Steps 1-4.

GNLSSN.	**48**	$880
	60	$913

Step 5. Leg Finish

91	white A	+$0
G1	graphite A	+$0
MS	metallic silver A	+$0

Engage Leg, Standing Back-to-Back Bracing Leg

GNLSBN

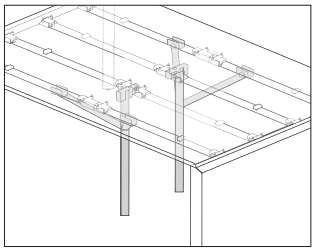

Product Information

Description

This standing height stabilizer leg kit provides support in a back-to-back bench or project table application where no intermediate leg is being used. This fixed height leg provides 1 3/4" of leveling adjustment. Leg includes all bracing, structural supports, and hardware required for a standing height application.

Notes

This leg is only used in standing height applications that have 1 beam width spanning between 2 end legs, or between 1 end leg and 1 end-of-run storage unit that supports the surface.

This leg can only be used with 42"-wide or wider beams.

Dimensions

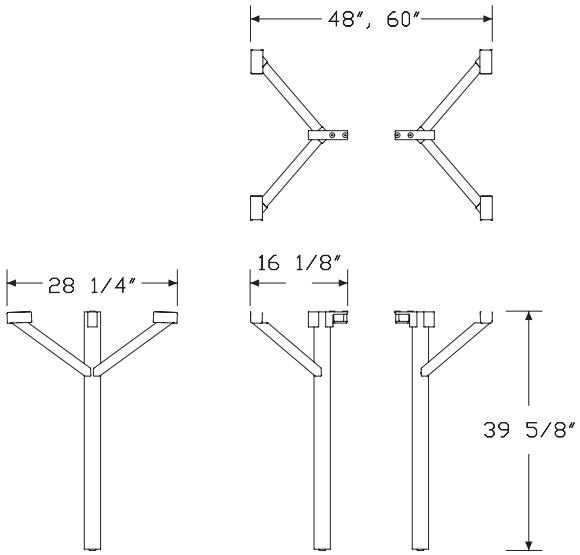

Specification Information

Step 1.

GN A

Step 2. Leg

LS standing height A

Step 3. Application

BN. bracing leg A

Step 4. Depth

48 48" deep application A

60 60" deep application A

Prices for Steps 1-4.

GNLSBN.	**48**	$823
	60	$839

Step 5. Leg Finish

91	white A	+$0
G1	graphite A	+$0
MS	metallic silver A	+$0

Closed Leg, Desk End, Single

GNCFEL
GNCFER

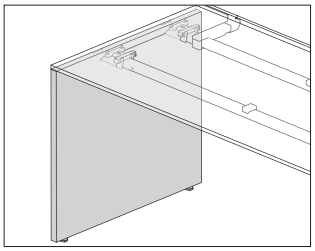

Product Information

Description

This single desk end leg provides support for an individual table or the end of a single-sided bench or return when a performance rail is not being used. It has a laminate top and thermoplastic edge, laminate top with a thermoplastic backed plywood edge, or veneer top and edge. This fixed height leg provides 1¾″ of leveling adjustment.

Notes

Size of leg must match depth of surface being supported.

Top of leg will be under the attached surface.

Grain/pattern direction is vertical on veneer, wood grain laminates, and directional laminates.

Dimensions

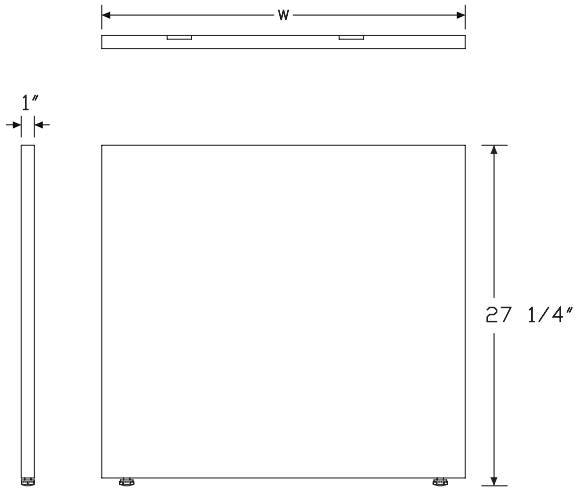

Specification Information

Step 1.

GN A

Step 2. Leg Type

CF fixed height A

Step 3. Application

EL. left hand A
ER. right hand A

Step 4. Size

24 24″ deep A
30 30″ deep A

Step 5. Material

L laminate top/thermoplastic edge A
U laminate top/universal edge A
W veneer A

Prices for Steps 1-5.

		L	U	W
GNCFEL.	**24**	$377	377	753
	30	$395	395	788
GNCFER.	**24**	$377	377	753
	30	$395	395	788

Step 6. Leg Finish

For laminate top/thermoplastic edge (L) or laminate top/universal edge (U)

76	light brown walnut A	+$0
8Q	folkstone grey A	+$0
91	white A	+$0
98	studio white A	+$0
CL	cool grey neutral A	+$0
HF	inner tone light A	+$0
HM	natural maple A	+$0
HP	light anigre A	+$0
HT	inner tone A	+$0
HX	aged cherry A	+$0
HY	walnut on cherry A	+$0
LA	light ash A	+$0
LBA	clear on ash A	+$0
LBR	phantom ecru A	+$0
LBS	phantom cocoa A	+$0

LBU	medium matte walnut A	+$0
LBV	warm grey teak A	+$0
LBB	oak on ash A	+$0
LBC	walnut on ash A	+$0
LBD	dark brown walnut A	+$0
LBE	medium red walnut A	+$0
LBF	neutral twill A	+$0
LBG	sarum twill A	+$0
LBH	earthen twill A	+$0
LBJ	graphite twill A	+$0
LBK	pewter mesh A	+$0
LBL	steel mesh A	+$0
LBM	crisp linen A	+$0
LBN	classic linen A	+$0
LBP	casual linen A	+$0
LBQ	white twill A	+$0
LM	mahogany A	+$0
LT	light tone A	+$0
LU	soft white A	+$0
MT	medium tone A	+$0
WL	sandstone A	+$0
WN	warm grey neutral A	+$0

Wood Veneer

For veneer (W)

2U	light brown walnut A	+$55
40	dark brown walnut A	+$55
ET	clear on ash A	+$55
EU	oak on ash A	+$55
EV	walnut on ash A	+$55

Step 7. Edge Finish

For laminate top/thermoplastic edge (L)

76	light brown walnut A	+$0
8Q	folkstone grey A	+$0
8Z	neutral grey A	+$0
91	white A	+$0
98	studio white A	+$0
BU	black umber A	+$0
CL	cool grey neutral A	+$0
HF	inner tone light A	+$0
HM	natural maple A	+$0
HP	light anigre A	+$0
HT	inner tone A	+$0
HX	aged cherry A	+$0
HY	walnut on cherry A	+$0
JB	millwork cherry A	+$0
LA	light ash A	+$0
LBA	clear on ash A	+$0
LBR	phantom ecru A	+$0
LBS	phantom cocoa A	+$0
LBU	medium matte walnut A	+$0
LBV	warm grey teak A	+$0
LBB	oak on ash A	+$0
LBC	walnut on ash A	+$0
LBD	dark brown walnut A	+$0
LBE	medium red walnut A	+$0
LBF	neutral twill A	+$0
LBG	sarum twill A	+$0
LBH	earthen twill A	+$0
LBJ	graphite twill A	+$0
LBK	pewter mesh A	+$0
LBL	steel mesh A	+$0
LBM	crisp linen A	+$0
LBN	classic linen A	+$0
LBP	casual linen A	+$0
LBQ	white twill A	+$0
LU	soft white A	+$0
MT	medium tone A	+$0
WL	sandstone A	+$0
WN	warm grey neutral A	+$0

For laminate top/universal edge (U)

PLY	plywood edge A	+$50

Step 8. Bracket Finish

Finish

91	white A	+$0
G1	graphite A	+$0
MS	metallic silver A	+$0

Closed Leg, Desk End, Double GNCFEN

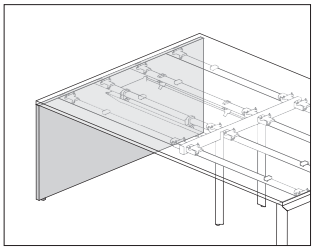

Product Information

Description

This double desk end leg provides support at either end of a back-to-back bench application or project table. It has a laminate top and thermoplastic edge, laminate top with a thermoplastic backed plywood edge, or veneer top and edge. This fixed height leg provides 1¾″ of leveling adjustment.

Notes

Size of leg must match the combined depth of the 2 primary surfaces or 1 project table surface being supported.

Top of leg will be under the attached surface.

Grain/pattern direction is vertical on veneer, wood grain laminates, and directional laminates.

Dimensions

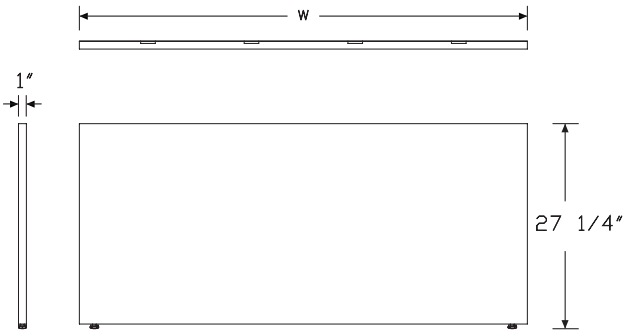

Specification Information

Step 1.

GN A

Step 2. Leg Type

CF fixed height A

Step 3. Application

EN. desk end double A

Step 4. Size

48 48″ deep A
60 60″ deep A

Step 5. Material

L laminate top/thermoplastic edge A
U laminate top/universal edge A
W veneer A

Prices for Steps 1-5.

		L	U	W
GNCFEN.	**48**	$578	578	1154
	60	$665	665	1329

Step 6. Leg Finish

For laminate top/thermoplastic edge (L) or laminate top/universal edge (U)

1X	vanilla A	+$0
76	light brown walnut A	+$0
8Q	folkstone grey A	+$0
91	white A	+$0
98	studio white A	+$0
CL	cool grey neutral A	+$0
HF	inner tone light A	+$0
HM	natural maple A	+$0
HP	light anigre A	+$0
HT	inner tone A	+$0
HX	aged cherry A	+$0
HY	walnut on cherry A	+$0
LA	light ash A	+$0
LBA	clear on ash A	+$0
LBR	phantom ecru A	+$0
LBS	phantom cocoa A	+$0
LBU	medium matte walnut A	+$0
LBV	warm grey teak A	+$0
LBB	oak on ash A	+$0

Closed Leg, Desk End, Double

continued

LBC	walnut on ash A	+$0
LBD	dark brown walnut A	+$0
LBE	medium red walnut A	+$0
LBF	neutral twill A	+$0
LBG	sarum twill A	+$0
LBH	earthen twill A	+$0
LBJ	graphite twill A	+$0
LBK	pewter mesh A	+$0
LBL	steel mesh A	+$0
LBM	crisp linen A	+$0
LBN	classic linen A	+$0
LBP	casual linen A	+$0
LBQ	white twill A	+$0
LM	mahogany A	+$0
LT	light tone A	+$0
LU	soft white A	+$0
MT	medium tone A	+$0
WL	sandstone A	+$0
WN	warm grey neutral A	+$0

Wood Veneer

For veneer (W)

2U	light brown walnut A	+$55
40	dark brown walnut A	+$55
ET	clear on ash A	+$55
EU	oak on ash A	+$55
EV	walnut on ash A	+$55

Step 7. Edge Finish

For laminate top/thermoplastic edge (L)

76	light brown walnut A	+$0
8Q	folkstone grey A	+$0
8Z	neutral grey A	+$0
91	white A	+$0
98	studio white A	+$0
BU	black umber A	+$0
CL	cool grey neutral A	+$0
HF	inner tone light A	+$0
HM	natural maple A	+$0
HP	light anigre A	+$0
HT	inner tone A	+$0
HX	aged cherry A	+$0
HY	walnut on cherry A	+$0
JB	millwork cherry A	+$0
LA	light ash A	+$0
LBA	clear on ash A	+$0
LBR	phantom ecru A	+$0
LBS	phantom cocoa A	+$0
LBU	medium matte walnut A	+$0
LBV	warm grey teak A	+$0
LBB	oak on ash A	+$0
LBC	walnut on ash A	+$0
LBD	dark brown walnut A	+$0
LBE	medium red walnut A	+$0
LBF	neutral twill A	+$0
LBG	sarum twill A	+$0
LBH	earthen twill A	+$0
LBJ	graphite twill A	+$0
LBK	pewter mesh A	+$0
LBL	steel mesh A	+$0
LBM	crisp linen A	+$0
LBN	classic linen A	+$0
LBP	casual linen A	+$0
LBQ	white twill A	+$0
LU	soft white A	+$0
MT	medium tone A	+$0
WL	sandstone A	+$0
WN	warm grey neutral A	+$0

For laminate top/universal edge (U)

PLY	plywood edge A	+$50

Step 8. Bracket Finish

Finish

91	white A	+$0
G1	graphite A	+$0
MS	metallic silver A	+$0

Closed Leg, Standing End, Double GNCSEN

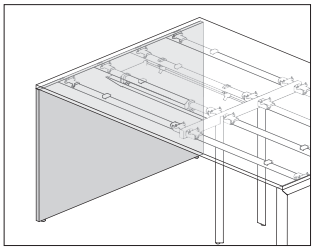

Product Information

Description

This double standing height end leg provides support at either end of a back-to-back bench application or project table. It has a laminate top and thermoplastic edge, laminate top with a thermoplastic backed plywood edge, or veneer top and edge. This fixed height leg provides 1 3/4″ of leveling adjustment.

Notes

Size of leg must match the combined depth of the 2 primary surfaces or 1 project table surface being supported.

Top of leg will be under the attached surface.

Grain/pattern direction is vertical on veneer, wood grain laminates, and directional laminates.

Dimensions

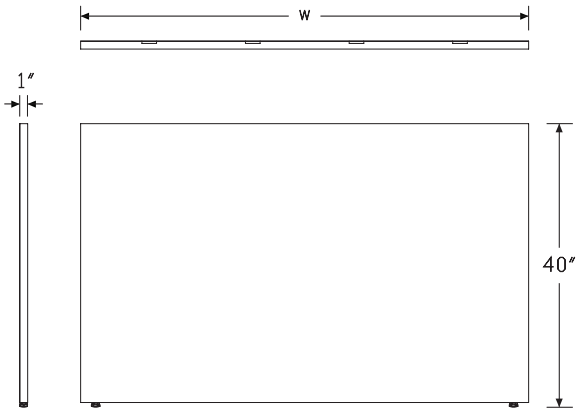

Specification Information

Step 1.

GN A

Step 2. Leg Type

CS standing height A

Step 3. Application

EN. desk end double A

Step 4. Size

48 48″ deep A

60 60″ deep A

Step 5. Material

L laminate top/thermoplastic edge A

U laminate top/universal edge A

W veneer A

Prices for Steps 1-5.

		L	U	W
GNCSEN.	**48**	$746	746	1493
	60	$863	863	1725

Step 6. Leg Finish

For laminate top/thermoplastic edge (L) or laminate top/universal edge (U)

76	light brown walnut A	+$0
8Q	folkstone grey A	+$0
91	white A	+$0
98	studio white A	+$0
CL	cool grey neutral A	+$0
HF	inner tone light A	+$0
HM	natural maple A	+$0
HP	light anigre A	+$0
HT	inner tone A	+$0
HX	aged cherry A	+$0
HY	walnut on cherry A	+$0
LA	light ash A	+$0
LBA	clear on ash A	+$0
LBR	phantom ecru A	+$0
LBS	phantom cocoa A	+$0
LBU	medium matte walnut A	+$0
LBV	warm grey teak A	+$0
LBB	oak on ash A	+$0
LBC	walnut on ash A	+$0

LBD	dark brown walnut A	+$0
LBE	medium red walnut A	+$0
LBF	neutral twill A	+$0
LBG	sarum twill A	+$0
LBH	earthen twill A	+$0
LBJ	graphite twill A	+$0
LBK	pewter mesh A	+$0
LBL	steel mesh A	+$0
LBM	crisp linen A	+$0
LBN	classic linen A	+$0
LBP	casual linen A	+$0
LBQ	white twill A	+$0
LM	mahogany A	+$0
LT	light tone A	+$0
LU	soft white A	+$0
MT	medium tone A	+$0
WL	sandstone A	+$0
WN	warm grey neutral A	+$0

Wood Veneer

For veneer (W)

2U	light brown walnut A	+$55
40	dark brown walnut A	+$55
ET	clear on ash A	+$55
EU	oak on ash A	+$55
EV	walnut on ash A	+$55

Step 7. Edge Finish

For laminate top/thermoplastic edge (L)

76	light brown walnut A	+$0
8Q	folkstone grey A	+$0
8Z	neutral grey A	+$0
91	white A	+$0
98	studio white A	+$0
BU	black umber A	+$0
CL	cool grey neutral A	+$0
HF	inner tone light A	+$0
HM	natural maple A	+$0
HP	light anigre A	+$0
HT	inner tone A	+$0
HX	aged cherry A	+$0
HY	walnut on cherry A	+$0
JB	millwork cherry A	+$0
LA	light ash A	+$0
LBA	clear on ash A	+$0
LBR	phantom ecru A	+$0
LBS	phantom cocoa A	+$0
LBU	medium matte walnut A	+$0
LBV	warm grey teak A	+$0
LBB	oak on ash A	+$0
LBC	walnut on ash A	+$0
LBD	dark brown walnut A	+$0
LBE	medium red walnut A	+$0
LBF	neutral twill A	+$0
LBG	sarum twill A	+$0
LBH	earthen twill A	+$0
LBJ	graphite twill A	+$0
LBK	pewter mesh A	+$0
LBL	steel mesh A	+$0
LBM	crisp linen A	+$0
LBN	classic linen A	+$0
LBP	casual linen A	+$0
LBQ	white twill A	+$0
LU	soft white A	+$0
MT	medium tone A	+$0
WL	sandstone A	+$0
WN	warm grey neutral A	+$0

For laminate top/universal edge (U)

PLY	plywood edge A	+$50

Step 8. Bracket Finish

91	white A	+$0
G1	graphite A	+$0
MS	metallic silver A	+$0

Beams, Rectangular Primary GNBR.

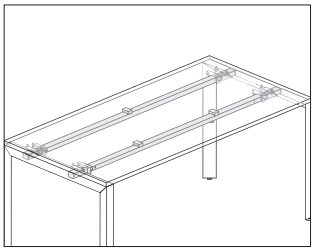

Product Information

Description

This pair of beams connects to end, asymmetrical, and intermediate Engage legs, and is required for the support of rectangular primary surfaces. Beams also provide attachment and support for cable management, screens, and other elements. Attachment hardware packs ordered separately.

Notes

To connect beams to fixed surfaces and legs, order hardware pack (GNHPF.). To connect beams to sliding surfaces and legs, use generic hardware pack (GNHRS.) when using primary sliding surfaces (GNTRD., GNTRF., GNTRG., GNTRN.) with generic (G) attachment option or primary performance rail surfaces (GNTRR.) only. Use hardware pack, sliding (GNHPS.) when using legacy surfaces specified as sliding attachment only.

Dimensions

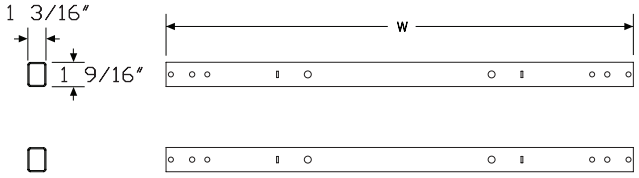

Specification Information

Step 1.

GNBR.

Step 2. Width

36	36″ wide
42	42″ wide
48	48″ wide
54	54″ wide
60	60″ wide
66	66″ wide
72	72″ wide
78	78″ wide A
84	84″ wide A
96	96″ wide A

Prices for Steps 1-2.

GNBR.	**36**	$90
	42	$95
	48	$100
	54	$145
	60	$130
	66	$181
	72	$159
	78	$222
	84	$233
	96	$250

Step 3. Finish

CL	cool grey neutral	+$0
91	white	+$13
G1	graphite	+$13

Beams, Rectangular Return

GNBA.
GNBB.
GNBC.

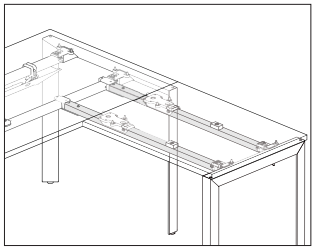

Product Information

Description

This pair of beams supports a return surface. It connects to a rectangular primary beam and a single desk end Engage leg. Beams also provide attachment and support for cable management, screens, and other elements. Attachment hardware packs ordered separately.

Notes

Specify beam type to match depth of primary surface to which it will be attached.

To connect beams to fixed surfaces and legs, order hardware pack (GNHSF.).

Dimensions

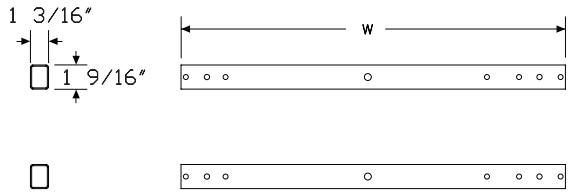

Specification Information

Step 1.

GNB

Step 2. Attachment Depth

A.	24″ deep primary
B.	30″ deep primary
C.	36″ deep primary

Step 3. Width

36	36″ wide
42	42″ wide
48	48″ wide
60	60″ wide
72	72″ wide

Prices for Steps 1-3.

GNBA.	**36**	$129
	42	$164
	48	$173
	60	$192
	72	$217
GNBB.	**36**	$138
	42	$165
	48	$187
	60	$219
	72	$242
GNBC.	**36**	$145
	42	$167
	48	$197
	60	$237
	72	$264

Return Leg Beam Replacement Kit GNBD.

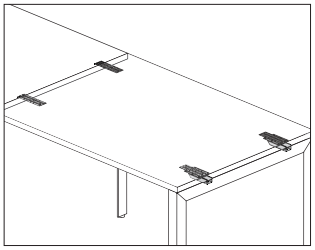

Product Information

Description

This kit supports the attachment of a Layout Studio Engage leg directly to the underside of a return surface without the need for beams. The kit includes 2 beam replacement brackets and ganging hardware to attach the return surface to a primary surface.

Notes

Kit should only be used to support 1 end of a return work surface.

2 kits are required to support a shared return using a double end leg.

Return surfaces 48″ wide and wider require the use of stiffeners.

Standard stiffener rules for Formcoat® surfaces apply.

Specify leg bracket finish to match finish of leg to which it will be attached.

Dimensions

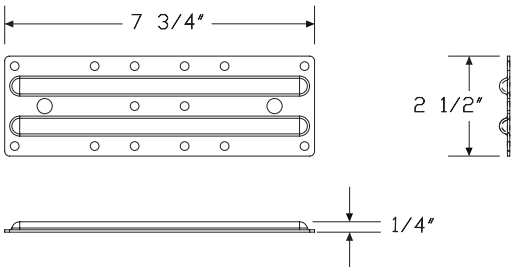

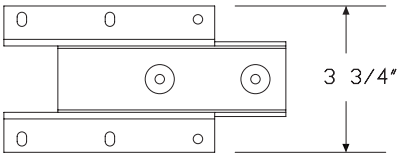

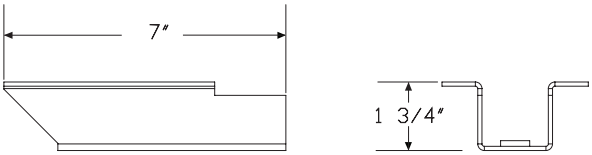

Specification Information

Step 1.

GNBD.		$52

Step 2. Leg Bracket Finish

91	white	+$0
G1	graphite	+$0
MS	metallic silver	+$0

Beams, Meeting End GNBM.

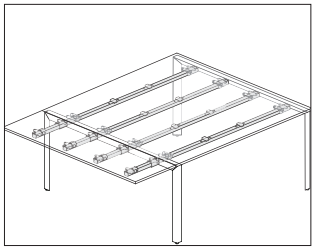

Product Information

Description

This pair of beams connects to a meeting end and intermediate Engage legs, and is required when specifying a meeting end surface across the end of a back-to-back configuration. Beams also provide attachment and support for cable management, screens, and other elements. Attachment hardware packs ordered separately.

Notes

Specify beam size to match the width of the adjacent rectangular primary surface.

To connect beams to fixed surfaces and legs, order hardware pack (GNHPF.). To connect beams to sliding surfaces and legs, use generic hardware pack (GNHRS.) when using primary sliding surfaces (GNTRD., GNTRF., GNTRG., GNTRN.) with generic (G) attachment option or primary performance rail surfaces (GNTRR.) only. Use hardware pack, sliding (GNHPS.) when using legacy surfaces specified as sliding attachment only.

To attach meeting end surface to the meeting end beams, specify 2 hardware packs (GNHPF.).

Meeting end beams are not usable in standing height applications.

Dimensions

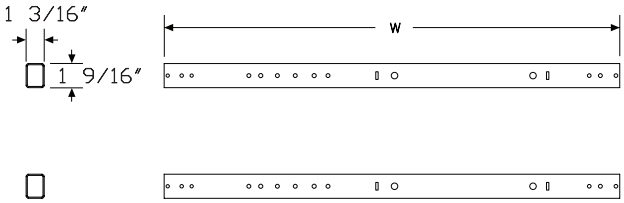

Specification Information

Step 1.

GNBM.

Step 2. Width

48	48″ wide
54	54″ wide
60	60″ wide
66	66″ wide
72	72″ wide
78	78″ wide
84	84″ wide
96	96″ wide

Prices for Steps 1-2.

GNBM.	**48**	$185
	54	$204
	60	$224
	66	$229
	72	$231
	78	$246
	84	$278
	96	$307

Beams, 120°

GNBF.
GNBG.

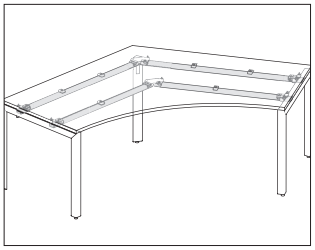

Product Information

Description

This set of beams connects to end or intermediate Engage legs, and a corner Engage leg, and is required for the support of a single 120° primary surface. Beams also provide attachment and support for cable management, screens, and other elements. Set includes 4 beams. Attachment hardware packs ordered separately.

Notes

Order corner leg (GNLFCN.) separately.

To connect beams to fixed surfaces and legs, order hardware pack (GNHDF.).

Dimensions

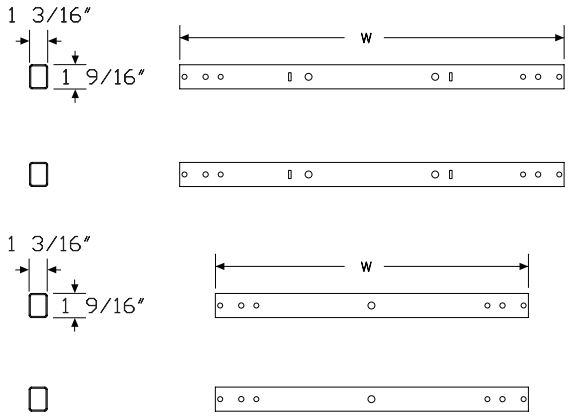

Specification Information

Step 1.

GNB

Step 2. Depth

F.	24″ deep
G.	30″ deep

Step 3. Width

48	48″ wide
54	54″ wide A
60	60″ wide

Prices for Steps 1-3.

GNBF.	**48**	$279
	54	$307
	60	$335
GNBG.	**48**	$279
	54	$307
	60	$335

Access Door GNPD.

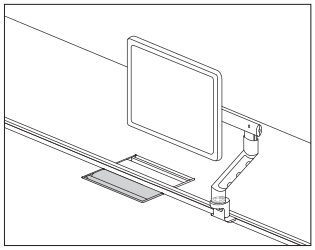

Product Information

Description

This metal door assembly fits inside an access cutout in the back edge of a Layout Studio® primary work surface and provides access to the power and data channel. It has a 3-sided frame and pivoting door.

Notes

Work surface must be specified with access door cutout. Order surface separately.

Dimensions

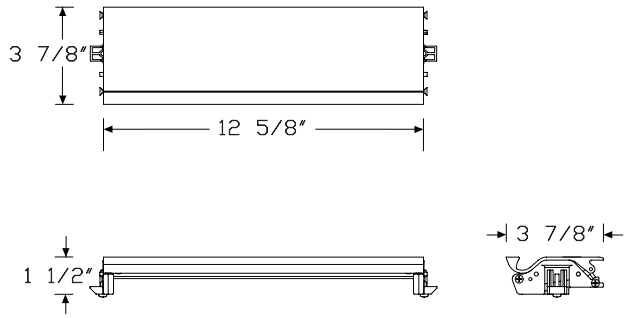

Specification Information

Step 1.

GNPD. A

Step 2. Application

A	edge mounted A	

Prices for Steps 1-2.

GNPD. A		$145

Step 3. Finish

91	white A	+$0
G1	graphite A	+$0
MS	metallic silver A	+$0

Junction Block Attachment Bracket GNPA.

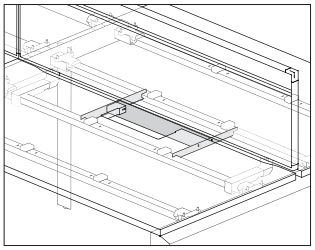

Product Information

Description

This painted steel bracket provides an attachment location for 1 junction block, centered on the rear beams of a table or bench application. Finish is cool grey neutral.

Notes

For double/back-to-back applications, order a 4-circuit junction block (GN1358.) separately.

For single-sided applications, order a 2-duplex block (GN1358.2S) or a 1-duplex block (GN1358.1S) separately.

Dimensions

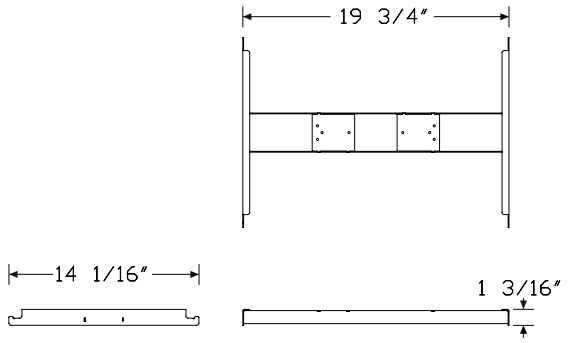

For Double/Back-to-Back Applications (D)

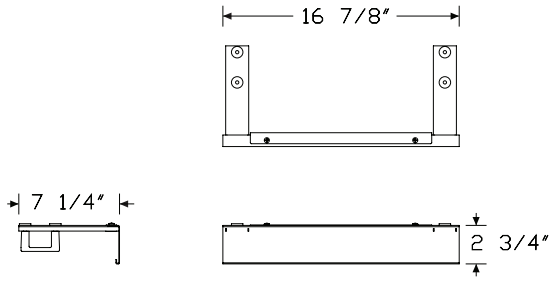

For Single-Sided Applications (S)

Specification Information

Step 1.

GNPA.

Step 2. Application

D	double/back-to-back applications
S	single-sided applications

Prices for Steps 1-2.

GNPA.	**D**	$75
	S	$154

Junction Block, 4-Circuit GN1358

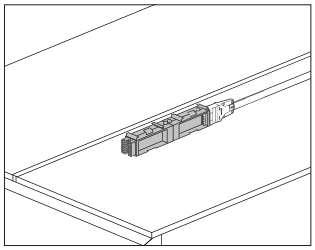

Product Information

Description

This block attaches to a junction block attachment bracket and accepts 4-circuit receptacles for access and distribution of up to 4 20-amp circuits. It has connection points at both ends for attaching a power entry, a 4-circuit power jumper, or block-to-block connector. Finish is black. It is UL Listed for use with Layout Studio® in the US and Canada.

Notes

Layout Studio modular power products are only compatible with other Layout Studio modular products, or with Connect™ 4-circuit modular components. Note that the UL listing for Layout Studio is no longer applicable when connecting Layout Studio power to Connect power.

For single-sided applications, specify the 2-duplex block (GN1358.2S) or the 1-duplex block (GN1358.1S).

For back-to-back applications, specify the 2-duplex block (GN1358.2B) or the 1-duplex block (GN1358.1B).

Order the following products separately:

- Duplex receptacle, 4-circuit (GN1355.)
- Junction block attachment bracket (GNPA.)

To route power from building to junction block, order 4-circuit power entry (GN1351. or GN1352.) separately.

To route power between junction blocks, order junction block to junction block jumper (GN1353.) separately.

To connect 2 junction blocks together, order a short block to block connector (GN1354.S) separately.

Dimensions

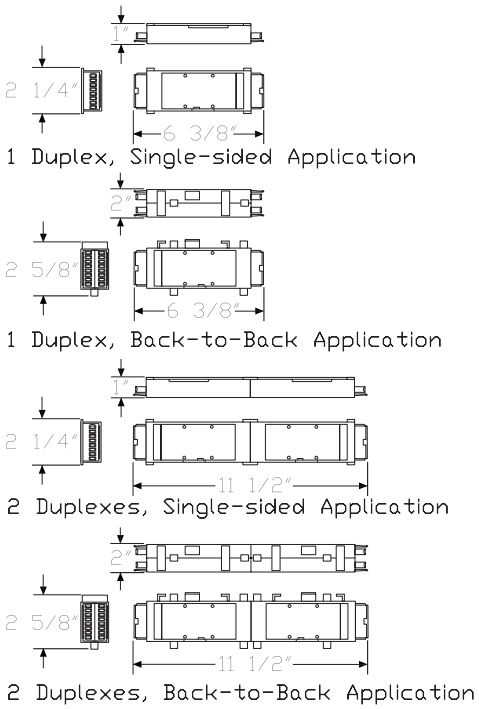

Specification Information

Step 1.

GN1358.

Step 2. Type

1S	1 duplex, single-sided application
1B	1 duplex, back-to-back application
2S	2 duplexes, single-sided application
2B	2 duplexes, back-to-back application

Step 3. Attachment Hardware

B	beam attached
R	performance rail attached

Prices for Steps 1-3.

		B	R
GN1358.	**1S**	$80	92
	1B	$87	97
	2S	$65	76
	2B	$71	82

Block Connector, 4-Circuit GN1354

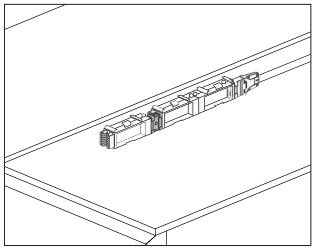

Product Information

Description

This connector connects 2 junction blocks together. Finish is black. Attachment hardware included. It is UL Listed for use with Layout Studio® in the US and Canada.

Notes

Layout Studio modular power products are only compatible with other Layout Studio modular products, or with Connect™ 4-circuit modular components. Note that the UL listing for Layout Studio is no longer applicable when connecting Layout Studio power to Connect power.

When 3 duplex receptacles are required per access point, use this connector to connect a GN1358.1S to a GN1358.2S for single-sided applications, or a GN1358.1B to a GN1358.2B for back-to-back applications.

Dimensions

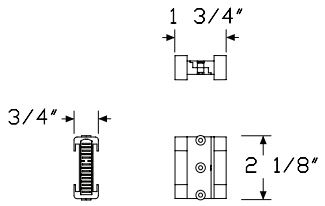

Short Receptacle-to-Receptacle Block Connector

Specification Information

Step 1.

GN1354.S	$44

Junction Block-to-Junction Block Jumper GN1353

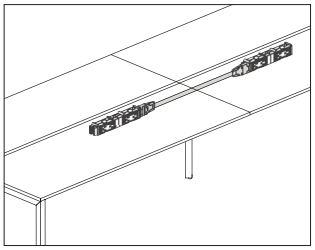

Product Information

Description

This adjustable power jumper distributes up to 4 20-amp circuits between 2 junction blocks. One end of the jumper extends an additional 3″ when connecting to an adjacent junction block. It is UL Listed for use with Layout Studio® in the US and Canada.

Notes

Layout Studio modular power products are only compatible with other Layout Studio modular products, or with Connect™ 4-circuit modular components. Note that the UL listing for Layout Studio is no longer applicable when connecting Layout Studio power to Connect power.

Finish on 5/8″ oval metallic conduit is silver.

For New York City, a harness cover (GNPH.) to span between wire management trays must be ordered separately.

Dimensions

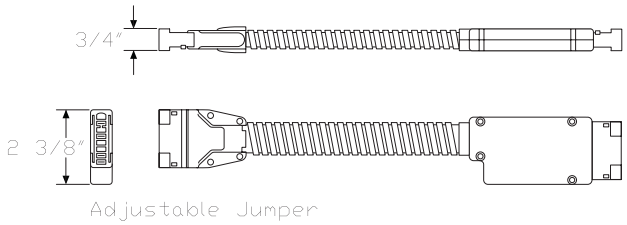

Specification Information

Step 1.

GN1353.

Step 2. Width

12	12″ wide
18	18″ wide
24	24″ wide
30	30″ wide
36	36″ wide
42	42″ wide
48	48″ wide
54	54″ wide
60	60″ wide
66	66″ wide
72	72″ wide
78	78″ wide
84	84″ wide
90	90″ wide
108	108″ wide
120	120″ wide
132	132″ wide
144	144″ wide

Step 3. Type

A	adjustable jumper

Prices for Steps 1-3.

		A
GN1353.	**12**	$71
	18	$77
	24	$81
	30	$88
	36	$93
	42	$97
	48	$102
	54	$108
	60	$113
	66	$117
	72	$122
	78	$129
	84	$133
	90	$138
	108	$153
	120	$162
	132	$174
	144	$184

Harness Cover GNPH.

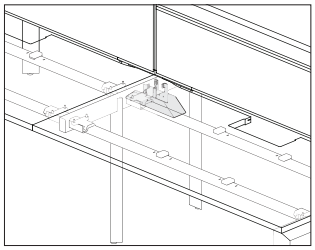

Product Information

Description

This cover provides a secure chase for the routing of a power harness between Layout Studio® wire management trays when UL1286 Listing is required.

Notes

Specify power harness separately.

Dimensions

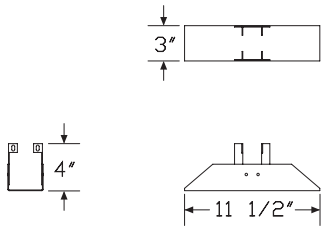

Specification Information

Step 1.

GNPH.		$24

Step 2. Finish

91	white	+$0
G1	graphite	+$0
MS	metallic silver	+$0

Duplex Receptacle, 4-Circuit GN1355

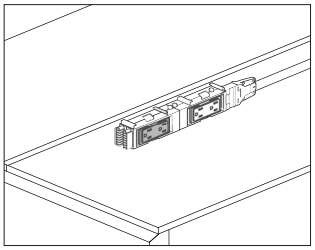

Product Information

Description

This 15- or 20-amp duplex receptacle attaches to a junction block to provide electrical access. Finish is black. Package of 1. It is UL Listed for use with Layout Studio® in the US and Canada.

Notes

Layout Studio modular power products are only compatible with other Layout Studio modular products, or with Connect™ 4-circuit modular components. Note that the UL listing for Layout Studio is no longer applicable when connecting Layout Studio power to Connect power.

Receptacle is labeled as I, II, III, or IV for circuit identification.

Order junction block (GN1358.) separately.

Dimensions

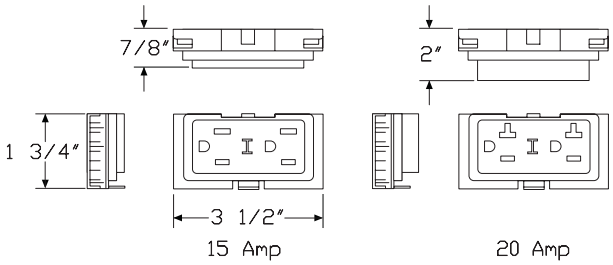

Specification Information

Step 1.

GN1355.

Step 2. Amps

15	15 amp
20	20 amp

Step 3. Circuit

1	circuit I
2	circuit II
3	circuit III
4	circuit IV

Prices for Steps 1-3.

		1	2	3	4
GN1355.	**15**	$21	21	21	21
	20	$26	26	26	26

Power Entry, 4-Circuit GN1351

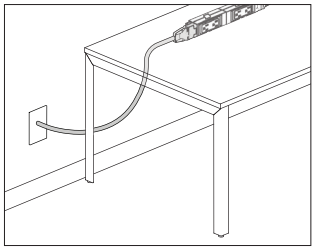

Product Information

Description

This power entry connects a building's electrical from a wall, floor, or column to the end of a 4-circuit junction block and distributes up to 4 20-amp circuits. UL Listed for use with Layout Studio® in the US and Canada.

Notes

Layout Studio modular power products are only compatible with other Layout Studio modular products, or with Connect™ 4-circuit modular components. Note that the UL listing for Layout Studio is no longer applicable when connecting Layout Studio power to Connect power.

Power entry can be field cut to the appropriate length.

For San Francisco, specify 3/8" flex metallic conduit option (C).

Finish color on liquid tight conduit is black. Finish color on metallic conduit is silver.

To manage and/or cover power entry, order umbilical riser (GNWF. or GNWG.) or floor power entry cover (GNPC.) separately.

A licensed electrician must wire the power entry to the building's electrical system.

Dimensions

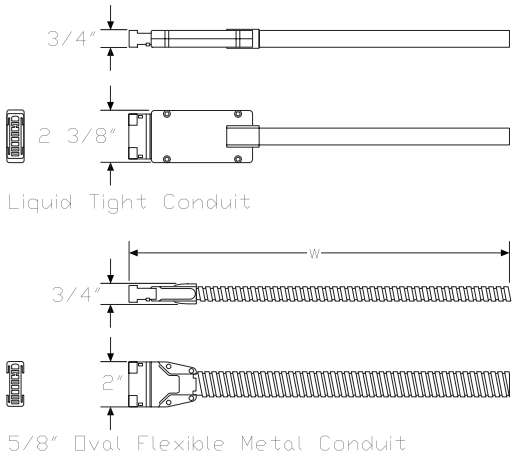

Specification Information

Step 1.

GN1351.

Step 2. Length

06	6' long
12	12' long
18	18' long
24	24' long

Step 3. Conduit Type

L	liquid tight conduit
C	3/8" flex metallic conduit

Prices for Steps 1-3.

		L	C
GN1351.	**06**	$137	137
	12	$194	194
	18	$254	254
	24	$326	326

Power Entry, 4-Circuit, New York City GN1352

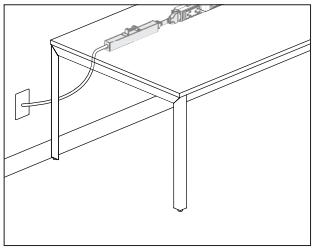

Product Information

Description

This power entry connects a building's electrical from a wall, floor, or column to the end of a 4-circuit junction block and distributes up to 4 20-amp circuits. It includes a junction box and harness. It is UL Listed for use with Layout Studio® in the US and Canada.

Notes

Layout Studio modular power products are only compatible with other Layout Studio modular products, or with Connect™ 4-circuit modular components. Note that the UL listing for Layout Studio is no longer applicable when connecting Layout Studio power to Connect power.

Power entry comes with a 38″ festoon.

A licensed electrician must wire the power entry to the building's electrical system.

Dimensions

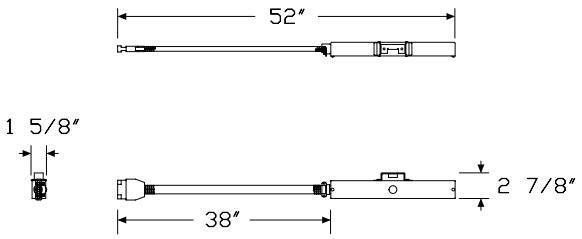

Specification Information

Step 1.

GN1352.38	$217

Wire Management Tray

GNWD.
GNWS.

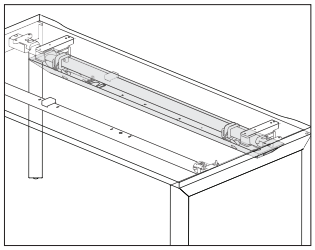

Product Information

Description

This painted steel tray provides a location to hold and manage power and voice/data cables within a Layout Studio® environment. Trays are available for both back-to-back and single-sided applications.

Notes

Single-sided wire management tray is for use with a non-rail surface. For performance rail, order wire management tray, single, performance rail (GNWS.R) separately.

The double unit attaches directly to beams with included hardware.

The single unit attaches to beams, but also requires an additional bracket. For each single tray, order 2 generic beam clamps (GNSG.) separately. If a desk up or modesty screen is being used, the generic beam clamps are not required.

Specify tray width to match beam width.

For use with double tray, order optional cable management clips (GNWC.) separately.

To route power and/or data from the floor to a cable tray, order the umbilical riser (GNWF.T or GNWG.T) separately.

Tray includes a knock-out on each end to allow a power jumper to pass from 1 tray to the next when UL1286 Listing is required (primarily New York City). Order harness cover (GNPH.) separately.

Dimensions

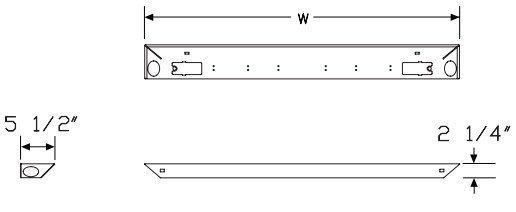

Single Tray

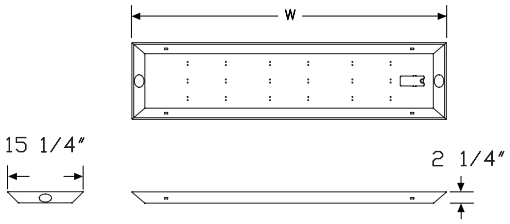

Double Tray

Specification Information

Step 1.

GN

Step 2. Type

WS.	single
WD.	double

Step 3. Width

36	36" wide
42	42" wide
48	48" wide
54	54" wide
60	60" wide
66	66" wide
72	72" wide
78	78" wide
84	84" wide
96	96" wide

Prices for Steps 1-3.

GNWS.	**36**	$139
	42	$141
	48	$143
	54	$167
	60	$191
	66	$194
	72	$196
	78	$202
	84	$220
	96	$236
GNWD.	**36**	$133
	42	$137
	48	$141
	54	$160
	60	$175
	66	$178
	72	$180
	78	$185
	84	$202
	96	$217

Step 4. Finish

91	white	+$0
G1	graphite	+$0
MS	metallic silver	+$0

Data Module GNWM.

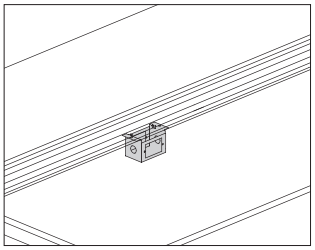

Product Information

Description

This housing mounts to the underside of a Layout Studio® performance rail or to the bottom of a wire management tray and supports face plates with voice/data ports. Finish is cool grey neutral. Attachment hardware included.

Notes

Housing accepts a standard NEMA data faceplate.

Dimensions

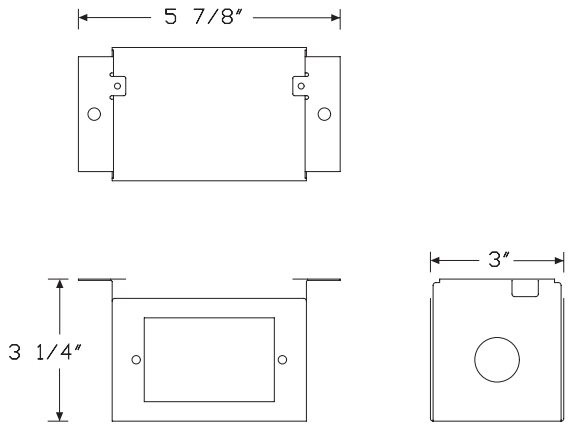

Specification Information

Step 1.

GN A

Step 2. Application

WM. data box A

Prices for Steps 1-2.

GNWM.	$28

Cable Management Clips, Double Tray GNWC.

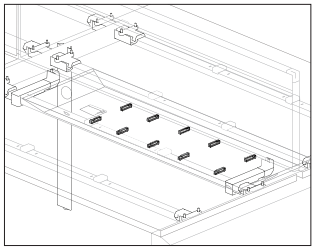

Product Information

Description

These clips attach into holes in the bottom of a double cable management tray to manage voice/data cables. Package includes 10 clips.

Dimensions

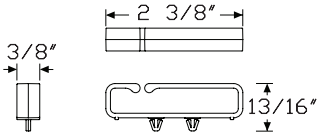

Specification Information

Step 1.

GNWC.

Step 2. Quantity

10 10 per pack

Prices for Steps 1-2.

GNWC. 10 $15

Floor Power Entry Cover GNPC.

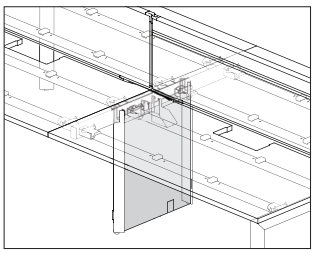

Product Information

Description

This 2-piece painted metal cover encloses the open space located between the 2 legs of a Layout Studio® 48″-, 60″-, or 72″-deep intermediate desk leg. It is used to conceal a floor power entry and/or cables from the floor to a wire management tray. Attachment hardware included.

Dimensions

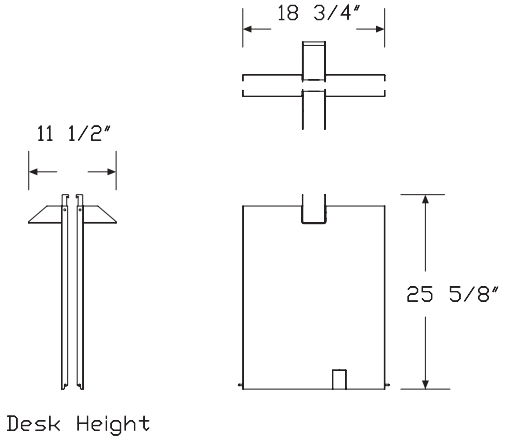

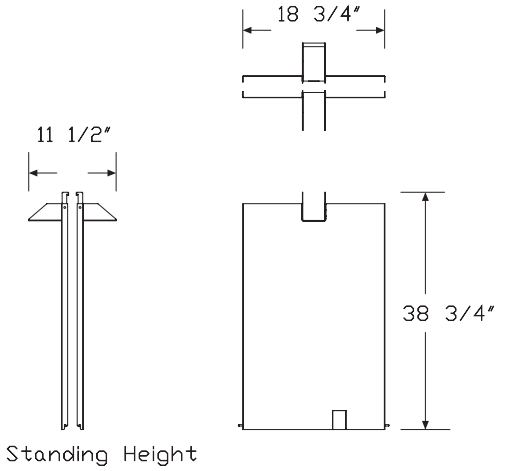

Specification Information

Step 1.

GNPC.

Step 2. Height

F	desk height
S	standing height

Prices for Steps 1-2.

GNPC.	**F**	$213
	S	$253

Step 3. Finish

91	white	+$0
G1	graphite	+$0
MS	metallic silver	+$0

Umbilical Riser, Fixed Height

GNWF.
GNWG.

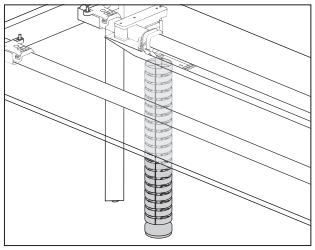

Product Information

Description

This umbilical riser routes power and/or data cables from the floor to the underside of a surface or wire management tray.

Notes

For data capacity, see Cable Capacity Chart in Omni.

Dimensions

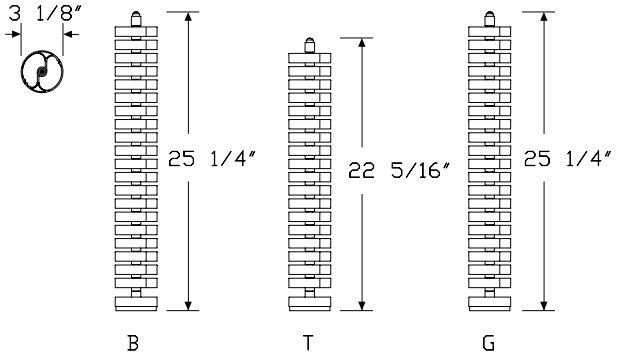

Fixed, seated height

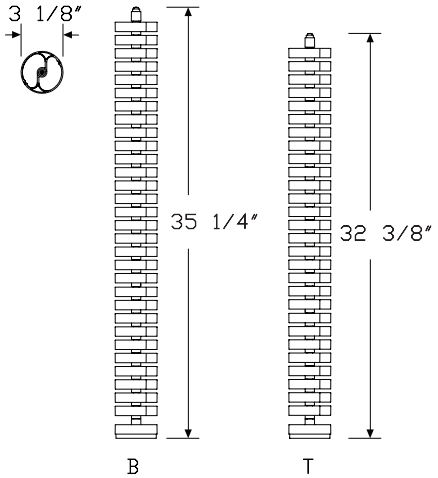

Fixed, standing height

Specification Information

Step 1.

GN

Step 2. Type

WG.	fixed, standing height A
WF.	fixed, seated height

Step 3. Attachment

For fixed, seated height (WF.)

B	beam attachment
T	tray attachment
G	generic attachment

For fixed, standing height (WG.)

B	beam attachment
T	tray attachment

Prices for Steps 1-3.

GNWG.	**B**	$161
	T	$155
GNWF.	**B**	$79
	T	$72
	G	$87

Step 4. Finish

91	white	+$0
G1	graphite	+$0
MS	metallic silver	+$0

Primary Work Surface, Rectangular

GNTRD.
GNTRF.
GNTRG.
GNTRN.

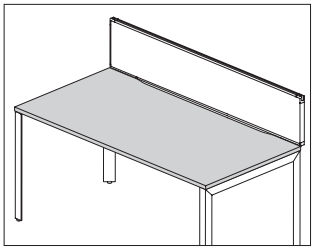

Product Information

Description

This squared-edge surface attaches to one set of primary beams and Engage legs in either a table, single-sided bench, or back-to-back bench application. It has a laminate top with thermoplastic edge, laminate top with a thermoplastic backed plywood edge, or veneer top and edge. Surface is 1 1/8″ thick, and has several back edge options depending on application and access required.

Notes

When attaching a monitor arm or other item that clamps to the back edge of a surface, specify the flash gap (F), flash gap and access cutout (B), or flash gap and access door cutout (G).

The flash gap is 0.6″ deep and starts 7 5/8″ from each end.

For surfaces with access door cutout, an access door (GNPD.) must be ordered separately. For surfaces 84″ and 96″ wide, 2 access doors must be ordered.

Surfaces with a flash gap and access door cutout (GNTRG.) are only available 48″ wide and wider.

Order attachment hardware pack (GNHPF., GNHRS.) separately.

Sliding surface attachment is available for 24″- or 30″-deep rectangular primary surface when using a performance rail or when using a non-rail surface with the generic attachment option. Order rectangular primary surface sliding hardware pack (GNHRS.) separately.

For quick release attachment, order quick release attachment hardware pack (GNHPA.) separately, in addition to the fixed attachment hardware pack (GNHPF.).

Attaching clamp-mounted components to the back edge of a sliding surface may result in reduced surface extension.

Dimensions

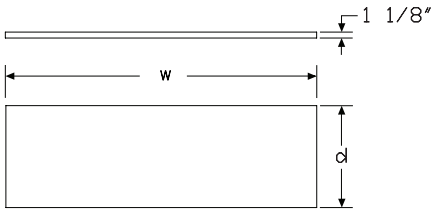

No Flash gap or Access door cutout

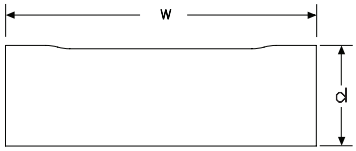

Flash gap

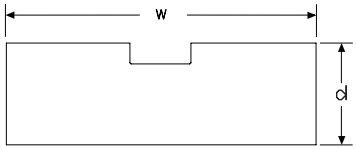

Access door cutout

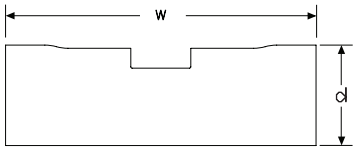

Flash gap and Access door cutout

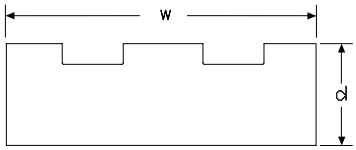

84″, 96″ wide with Access door cutout

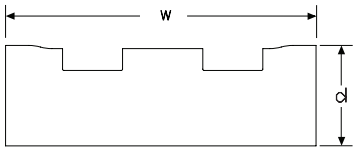

84″, 96″ wide with Flash gap and Access door cutout

Specification Information

Step 1.

GN

Step 2. Type

TR rectangular primary worksurface

Step 3. Access Detail

N. no flash gap or access cut-out
F. flash gap
D. access door cut-out A
G. flash gap and access door cut-out A

Step 4. Depth

24 24" deep
30 30" deep
36 36" deep

Step 5. Width

For no flash gap or access cut-out (N.), flash gap (F.), or access door cut-out (D.)

36 36" wide
42 42" wide
48 48" wide
54 54" wide A
60 60" wide
66 66" wide A
72 72" wide
78 78" wide
84 84" wide
96 96" wide

For flash gap and access door cut-out (G.)

48 48" wide
54 54" wide
60 60" wide
66 66" wide
72 72" wide
78 78" wide
84 84" wide
96 96" wide

Step 6. Attachment

For 36" deep (36)

F non-sliding

For access door cut-out (D.) or flash gap and access door cut-out (G.) with 24" deep (24) or 30" deep (30) with 48" wide (48), 42" wide (42), 54" wide (54), 60" wide (60), 66" wide (66), 72" wide (72), or 78" wide (78)

G generic

For no flash gap or access cut-out (N.) or flash gap (F.) with 30" deep (30) with 48" wide (48), 42" wide (42), 54" wide (54), 60" wide (60), 66" wide (66), 72" wide (72), or 78" wide (78)

F non-sliding
G generic

For no flash gap or access cut-out (N.) or flash gap (F.) with 24" deep (24) with 48" wide (48), 42" wide (42), 54" wide (54), 60" wide (60), 66" wide (66), 72" wide (72), or 78" wide (78)

F non-sliding
G generic

For no flash gap or access cut-out (N.), flash gap (F.), access door cut-out (D.), or flash gap and access door cut-out (G.) with 24" deep (24) or 30" deep (30) with 84" wide (84) or 96" wide (96)

F non-sliding

For access door cut-out (D.) with 24" deep (24) or 30" deep (30) with 36" wide (36)

F non-sliding

For no flash gap or access cut-out (N.) or flash gap (F.) with 24" deep (24) with 36" wide (36)

F non-sliding
G generic

For no flash gap or access cut-out (N.) or flash gap (F.) with 30" deep (30) with 36" wide (36)

F non-sliding
G generic

Step 7. Surface Material

L laminate top/thermoplastic edge
W veneer
U laminate top/universal edge

Primary Work Surface, Rectangular *continued*

Prices for Steps 1-7.

		FL	FW	FU	GL	GW	GU
GNTRN.24	**36**	$128	232	128	131	238	131
	42	$144	259	144	148	265	148
	48	$158	286	158	162	293	162
	54	$177	316	177	182	326	182
	60	$195	347	195	200	357	200
	66	$218	386	218	223	397	223
	72	$237	424	237	245	435	245
	78	$277	490	277	286	503	286
	84	$316	556	316	—	—	—
	96	$347	609	347	—	—	—
30	**36**	$153	266	153	157	273	157
	42	$170	300	170	175	307	175
	48	$188	336	188	193	345	193
	54	$211	374	211	217	384	217
	60	$232	411	232	238	422	238
	66	$259	456	259	265	468	265
	72	$286	501	286	293	513	293
	78	$330	578	330	338	593	338
	84	$374	656	374	—	—	—
	96	$410	717	410	—	—	—
36	**36**	$181	323	181	—	—	—
	42	$200	359	200	—	—	—
	48	$222	393	222	—	—	—
	54	$247	436	247	—	—	—
	60	$271	478	271	—	—	—
	66	$299	531	299	—	—	—
	72	$332	582	332	—	—	—
	78	$384	672	384	—	—	—
	84	$436	763	436	—	—	—
	96	$477	834	477	—	—	—
GNTRF. 24	**36**	$173	278	173	177	285	177
	42	$188	303	188	193	312	193
	48	$202	330	202	209	339	209
	54	$222	361	222	227	372	227
	60	$239	392	239	248	403	248
	66	$262	432	262	268	443	268
	72	$283	470	283	291	483	291
	78	$322	536	322	331	551	331
	84	$361	602	361	—	—	—
	96	$392	656	392	—	—	—
30	**36**	$197	312	197	202	320	202
	42	$216	346	216	221	355	221
	48	$232	382	232	238	391	238
	54	$256	420	256	262	431	262
	60	$278	457	278	284	469	284
	66	$308	502	308	317	514	317
	72	$330	546	330	339	561	339
	78	$375	625	375	385	640	385
	84	$420	703	420	—	—	—
	96	$456	765	456	—	—	—
36	**36**	$225	369	225	—	—	—
	42	$247	404	247	—	—	—
	48	$266	438	266	—	—	—
	54	$292	482	292	—	—	—
	60	$317	525	317	—	—	—
	66	$348	577	348	—	—	—
	72	$377	629	377	—	—	—
	78	$430	719	430	—	—	—
	84	$482	810	482	—	—	—
	96	$524	881	524	—	—	—
GNTRD.24	**36**	$145	246	145	—	—	—
	42	—	—	—	$160	272	160
	48	—	—	—	$174	297	174
	54	—	—	—	$192	328	192
	60	—	—	—	$211	357	211
	66	—	—	—	$232	395	232
	72	—	—	—	$251	433	251
	78	—	—	—	$289	496	289
	84	$328	560	328	—	—	—
	96	$357	611	357	—	—	—
30	**36**	$169	279	169	—	—	—
	42	—	—	—	$186	313	186
	48	—	—	—	$202	347	202
	54	—	—	—	$226	384	226
	60	—	—	—	$246	421	246
	66	—	—	—	$272	464	272
	72	—	—	—	$297	506	297
	78	—	—	—	$341	582	341
	84	$384	657	384	—	—	—
	96	$420	717	420	—	—	—

36	**36**	$195	335	195	—	—	—
	42	$216	369	216	—	—	—
	48	$236	401	236	—	—	—
	54	$261	444	261	—	—	—
	60	$284	485	284	—	—	—
	66	$315	537	315	—	—	—
	72	$343	586	343	—	—	—
	78	$393	674	393	—	—	—
	84	$444	761	444	—	—	—
	96	$484	831	484	—	—	—
GNTRG.24	**48**	—	—	—	$222	347	222
	54	—	—	—	$239	377	239
	60	—	—	—	$257	407	257
	66	—	—	—	$280	446	280
	72	—	—	—	$299	485	299
	78	—	—	—	$338	549	338
	84	$377	614	377	—	—	—
	96	$407	667	407	—	—	—
30	**48**	—	—	—	$250	397	250
	54	—	—	—	$273	435	273
	60	—	—	—	$294	471	294
	66	—	—	—	$325	515	325
	72	—	—	—	$347	560	347
	78	—	—	—	$391	637	391
	84	$435	713	435	—	—	—
	96	$470	774	470	—	—	—
36	**48**	$284	453	284	—	—	—
	54	$308	496	308	—	—	—
	60	$333	538	333	—	—	—
	66	$363	591	363	—	—	—
	72	$393	641	393	—	—	—
	78	$444	730	444	—	—	—
	84	$496	819	496	—	—	—
	96	$537	889	537	—	—	—

Step 8. Surface Finish

For laminate top/thermoplastic edge (L) or laminate top/universal edge (U)

76	light brown walnut	+$0
91	white	+$0
98	studio white	+$0
8Q	folkstone grey	+$0
CL	cool grey neutral	+$0
HF	inner tone light	+$0
HM	natural maple	+$0
HP	light anigre	+$0
HT	inner tone	+$0
HX	aged cherry	+$0
HY	walnut on cherry	+$0
LA	light ash	+$0
LBA	clear on ash	+$0
LBR	phantom ecru	+$0
LBS	phantom cocoa	+$0
LBU	medium matte walnut	+$0
LBV	warm grey teak	+$0
LBB	oak on ash	+$0
LBC	walnut on ash	+$0
LBD	dark brown walnut	+$0
LBE	medium red walnut	+$0
LBF	neutral twill	+$0
LBG	sarum twill	+$0
LBH	earthen twill	+$0
LBJ	graphite twill	+$0
LBK	pewter mesh	+$0
LBL	steel mesh	+$0
LBM	crisp linen	+$0
LBN	classic linen	+$0
LBP	casual linen	+$0
LBQ	white twill	+$0
LU	soft white	+$0
WL	sandstone	+$0
WN	warm grey neutral	+$0

Wood Veneer

For veneer (W)

2U	light brown walnut	+$55
40	dark brown walnut	+$55
ET	clear on ash	+$55
EU	oak on ash	+$55
EV	walnut on ash	+$55

Step 9. Edge Finish		
For laminate top/thermoplastic edge (L)		
76	light brown walnut	+$0
8Q	folkstone grey	+$0
91	white	+$0
98	studio white	+$0
CL	cool grey neutral	+$0
LA	light ash	+$0
LBA	clear on ash	+$0
LBR	phantom ecru	+$0
LBS	phantom cocoa	+$0
LBU	medium matte walnut	+$0
LBV	warm grey teak	+$0
LBB	oak on ash	+$0
LBC	walnut on ash	+$0
LBD	dark brown walnut	+$0
LBE	medium red walnut	+$0
LBF	neutral twill	+$0
LBG	sarum twill	+$0
LBH	earthen twill	+$0
LBJ	graphite twill	+$0
LBK	pewter mesh	+$0
LBL	steel mesh	+$0
LBM	crisp linen	+$0
LBN	classic linen	+$0
LBP	casual linen	+$0
LBQ	white twill	+$0
WL	sandstone	+$0
WN	warm grey neutral	+$0
HF	inner tone light	+$0
HM	natural maple	+$0
HP	light anigre	+$0
HT	inner tone	+$0
HX	aged cherry	+$0
HY	walnut on cherry	+$0
LU	soft white	+$0
For laminate top/universal edge (U)		
PLY	plywood edge A	+$50

Step 10. Flash Gap Edge Finish *For flash gap (F.) or flash gap and access door cut-out (G.) with laminate top/universal edge (U)*		
76	light brown walnut	+$0
8Q	folkstone grey	+$0
91	white	+$0
98	studio white	+$0
CL	cool grey neutral	+$0
HF	inner tone light	+$0
HM	natural maple	+$0
HP	light anigre	+$0
HT	inner tone	+$0
HX	aged cherry	+$0
HY	walnut on cherry	+$0
LA	light ash	+$0
LBA	clear on ash	+$0
LBB	oak on ash	+$0
LBC	walnut on ash	+$0
LBD	dark brown walnut	+$0
LBE	medium red walnut	+$0
LBF	neutral twill	+$0
LBG	sarum twill	+$0
LBH	earthen twill	+$0
LBJ	graphite twill	+$0
LBK	pewter mesh	+$0
LBL	steel mesh	+$0
LBM	crisp linen	+$0
LBN	classic linen	+$0
LBP	casual linen	+$0
LBQ	white twill	+$0
LBR	phantom ecru	+$0
LBS	phantom cocoa	+$0
LBU	medium matte walnut	+$0
LBV	warm grey teak	+$0
LU	soft white	+$0
WL	sandstone	+$0
WN	warm grey neutral	+$0

Return Work Surface, Rectangular GNTSN.

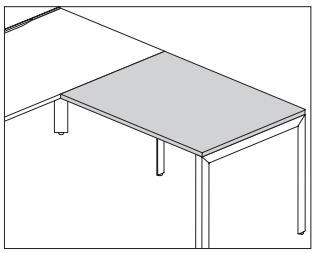

Product Information

Description

This squared-edge surface attaches to one set of return beams and an Engage leg to create a return. It has a laminate top with thermoplastic edge, laminate top with a thermoplastic backed plywood edge, or veneer top and edge. Surface is 1 1/8″ thick.

Notes

When using a screen along the back edge of the surface, items that clamp to the back edge of the surface cannot be used.

Order fixed attachment hardware pack (GNHSF.) separately.

For quick release attachment, order quick release attachment hardware pack (GNHPA.) separately, in addition to the fixed attachment hardware pack (GNHSF.).

Dimensions

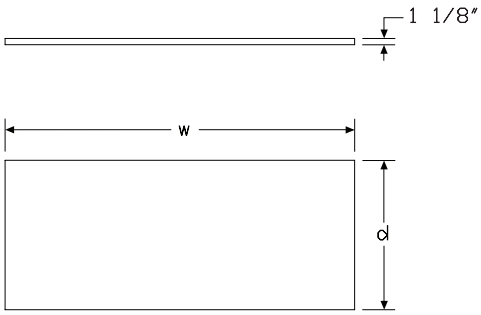

Specification Information

Step 1.

GN

Step 2. Type

TS rectangular return worksurface

Step 3. Access Detail

N. no flash gap or access cut-out

Step 4. Depth

24 24″ deep

Step 5. Width

36 36″ wide
42 42″ wide
48 48″ wide
60 60″ wide
72 72″ wide

Step 6. Attachment

F non-sliding

Step 7. Surface Material

L laminate top/thermoplastic edge
W veneer
U laminate top/universal edge

Prices for Steps 1-7.

		FL	FW	FU
GNTSN.24	**36**	$147	254	147
	42	$165	279	165
	48	$180	305	180
	60	$197	363	197
	72	$255	439	255

Return Work Surface, Rectangular

continued

Step 8. Surface Finish

For laminate top/thermoplastic edge (L) or laminate top/universal edge (U)

76	light brown walnut	+$0
91	white	+$0
98	studio white	+$0
8Q	folkstone grey	+$0
CL	cool grey neutral	+$0
HF	inner tone light	+$0
HM	natural maple	+$0
HP	light anigre	+$0
HT	inner tone	+$0
HX	aged cherry	+$0
HY	walnut on cherry	+$0
LA	light ash	+$0
LBA	clear on ash	+$0
LBR	phantom ecru	+$0
LBS	phantom cocoa	+$0
LBU	medium matte walnut	+$0
LBV	warm grey teak	+$0
LBB	oak on ash	+$0
LBC	walnut on ash	+$0
LBD	dark brown walnut	+$0
LBE	medium red walnut	+$0
LBF	neutral twill	+$0
LBG	sarum twill	+$0
LBH	earthen twill	+$0
LBJ	graphite twill	+$0
LBK	pewter mesh	+$0
LBL	steel mesh	+$0
LBM	crisp linen	+$0
LBN	classic linen	+$0
LBP	casual linen	+$0
LBQ	white twill	+$0
LU	soft white	+$0
WL	sandstone	+$0
WN	warm grey neutral	+$0

Wood Veneer

For veneer (W)

2U	light brown walnut	+$55
40	dark brown walnut	+$55
ET	clear on ash	+$55
EU	oak on ash	+$55
EV	walnut on ash	+$55

Step 9. Edge Finish

For laminate top/thermoplastic edge (L)

76	light brown walnut	+$0
8Q	folkstone grey	+$0
91	white	+$0
98	studio white	+$0
CL	cool grey neutral	+$0
LA	light ash	+$0
LBA	clear on ash	+$0
LBR	phantom ecru	+$0
LBS	phantom cocoa	+$0
LBU	medium matte walnut	+$0
LBV	warm grey teak	+$0
LBB	oak on ash	+$0
LBC	walnut on ash	+$0
LBD	dark brown walnut	+$0
LBE	medium red walnut	+$0
LBF	neutral twill	+$0
LBG	sarum twill	+$0
LBH	earthen twill	+$0
LBJ	graphite twill	+$0
LBK	pewter mesh	+$0
LBL	steel mesh	+$0
LBM	crisp linen	+$0
LBN	classic linen	+$0
LBP	casual linen	+$0
LBQ	white twill	+$0
WL	sandstone	+$0
WN	warm grey neutral	+$0
HF	inner tone light	+$0
HM	natural maple	+$0
HP	light anigre	+$0
HT	inner tone	+$0
HX	aged cherry	+$0
HY	walnut on cherry	+$0
LU	soft white	+$0

For laminate top/universal edge (U)

PLY	plywood edge	+$50

Project Table, Rectangular

GNTPA.
GNTPN.

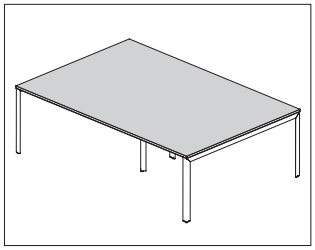

Product Information

Description

This squared-edge surface attaches to primary beams and Engage legs to create a freestanding table. It has a laminate top with thermoplastic edge, laminate top with a thermoplastic backed plywood edge, or veneer top and edge. Surface is 1 1/8" thick.

Notes

2 or more sets of beams (GNBR.) are required per surface. Order separately.

Tables must include at least 1 intermediate leg (GNLFSN.) or 1 bracing leg (GNLFBN.).

For surfaces with access cut-out, a 5-outlet Logic grommet mounted electrical distributor (Y1425.C or Y1425.F) or Logic grommet pass thru (Y1420.V) must be ordered separately.

For surfaces with access cutout and widths of 72", 84" or 96", 2 access cut-outs are included.

Order attachment hardware pack (GNHPF.) separately.

Dimensions

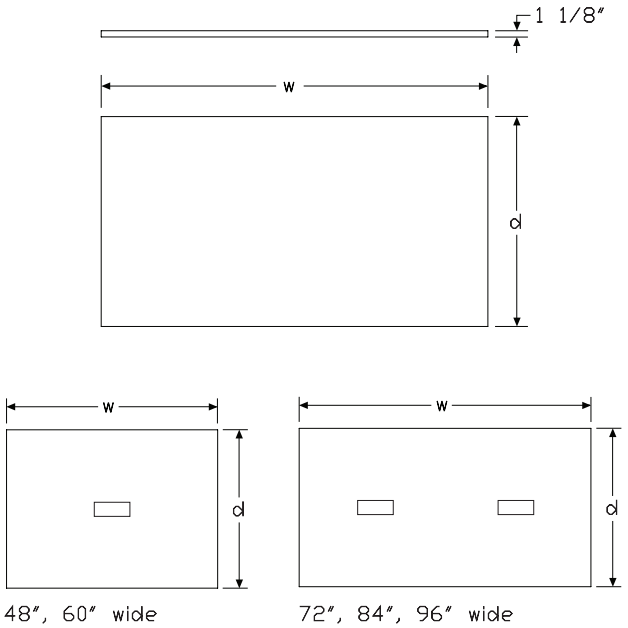

Specification Information

Step 1.

GN

Step 2. Type

TP rectangular project table

Step 3. Access Detail

N. no access cut-out
A. access cut-out

Step 4. Depth

48 48" deep
60 60" deep

Step 5. Width

For 48" deep (48)

48 48" wide
60 60" wide
72 72" wide
84 84" wide
96 96" wide

For 60" deep (60)

60 60" wide
72 72" wide
84 84" wide
96 96" wide

Step 6. Attachment

F non-sliding

Step 7. Surface Material

L laminate top/thermoplastic edge
W veneer
U laminate top/universal edge

Prices for Steps 1-7.

		FL	FW	FU
GNTPN.48	**48**	$331	572	331
	60	$393	678	393
	72	$477	816	477
	84	$595	1056	595
	96	$678	1184	678

60	**60**	$576	992	576
	72	$655	1122	655
	84	$844	1460	844
	96	$958	1558	958
GNTPA. 48	**48**	$374	615	374
	60	$437	721	437
	72	$520	860	520
	84	$682	1143	682
	96	$765	1270	765
60	**60**	$619	1035	619
	72	$698	1165	698
	84	$932	1547	932
	96	$1044	1645	1044

Step 8. Surface Finish

For laminate top/thermoplastic edge (L) or laminate top/universal edge (U)

76	light brown walnut	+$0
91	white	+$0
98	studio white	+$0
8Q	folkstone grey	+$0
CL	cool grey neutral	+$0
HF	inner tone light	+$0
HM	natural maple	+$0
HP	light anigre	+$0
HT	inner tone	+$0
HX	aged cherry	+$0
HY	walnut on cherry	+$0
LA	light ash	+$0
LBA	clear on ash	+$0
LBR	phantom ecru	+$0
LBS	phantom cocoa	+$0
LBU	medium matte walnut	+$0
LBV	warm grey teak	+$0
LBB	oak on ash	+$0
LBC	walnut on ash	+$0
LBD	dark brown walnut	+$0
LBE	medium red walnut	+$0
LBF	neutral twill	+$0
LBG	sarum twill	+$0
LBH	earthen twill	+$0
LBJ	graphite twill	+$0
LBK	pewter mesh	+$0
LBL	steel mesh	+$0
LBM	crisp linen	+$0
LBN	classic linen	+$0
LBP	casual linen	+$0
LBQ	white twill	+$0
LU	soft white	+$0
WL	sandstone	+$0
WN	warm grey neutral	+$0

Wood Veneer

For veneer (W)

2U	light brown walnut	+$55
40	dark brown walnut	+$55
ET	clear on ash	+$55
EU	oak on ash	+$55
EV	walnut on ash	+$55

Step 9. Edge Finish

For laminate top/thermoplastic edge (L)		
76	light brown walnut	+$0
8Q	folkstone grey	+$0
91	white	+$0
98	studio white	+$0
CL	cool grey neutral	+$0
LA	light ash	+$0
LBA	clear on ash	+$0
LBR	phantom ecru	+$0
LBS	phantom cocoa	+$0
LBU	medium matte walnut	+$0
LBV	warm grey teak	+$0
LBB	oak on ash	+$0
LBC	walnut on ash	+$0
LBD	dark brown walnut	+$0
LBE	medium red walnut	+$0
LBF	neutral twill	+$0
LBG	sarum twill	+$0
LBH	earthen twill	+$0
LBJ	graphite twill	+$0
LBK	pewter mesh	+$0
LBL	steel mesh	+$0
LBM	crisp linen	+$0
LBN	classic linen	+$0
LBP	casual linen	+$0
LBQ	white twill	+$0
WL	sandstone	+$0
WN	warm grey neutral	+$0
HF	inner tone light	+$0
HM	natural maple	+$0
HP	light anigre	+$0
HT	inner tone	+$0
HX	aged cherry	+$0
HY	walnut on cherry	+$0
LU	soft white	+$0
For laminate top/universal edge (U)		
PLY	plywood edge A	+$50

Meeting End, Rectangular

GNTDG.
GNTDN.

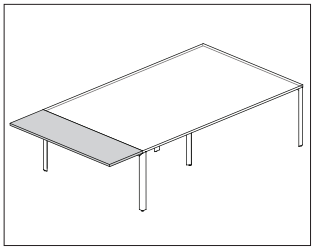

Product Information

Description

This 20″-deep squared-edge surface attaches to 2 sets of meeting end beams positioned at the end of a back-to-back bench application to create a meeting space. It has a laminate top with thermoplastic edge, laminate top with a thermoplastic backed plywood edge, or veneer top and edge. An optional grommet cut-out and grommet is available. Surface is 1 1/8″ thick.

Notes

Grommet color matches the laminate color for solid color laminates, and is graphite for all other laminates and veneers.

For each meeting end surface, order 2 fixed attachment hardware packs (GNHPF.) separately.

Dimensions

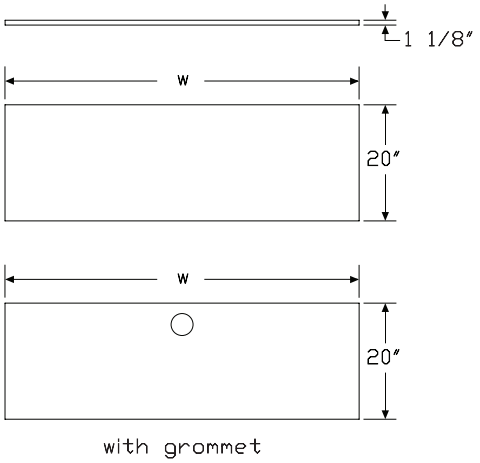

Specification Information

Step 1.

GN

Step 2. Type

TD rectangular meeting end

Step 3. Access Detail

N. no access cut-out
G. grommet

Step 4. Depth

20 20″ deep

Step 5. Width

48 48″ wide
60 60″ wide
72 72″ wide

Step 6. Attachment

F non-sliding

Step 7. Surface Material

L laminate top/thermoplastic edge
W veneer
U laminate top/universal edge

Prices for Steps 1-7.

		FL	FW	FU
GNTDN.	**20**	**48**	$173	294
173				
	60	$202	363	202
	72	$250	432	250
GNTDG.20	**48**	$193	313	193
	60	$223	383	223
	72	$270	452	270

Step 8. Surface Finish

For laminate top/thermoplastic edge (L) or laminate top/universal edge (U)

76	light brown walnut	+$0
91	white	+$0
98	studio white	+$0
8Q	folkstone grey	+$0
CL	cool grey neutral	+$0
HF	inner tone light	+$0
HM	natural maple	+$0
HP	light anigre	+$0
HT	inner tone	+$0
HX	aged cherry	+$0
HY	walnut on cherry	+$0
LA	light ash	+$0
LBA	clear on ash	+$0
LBR	phantom ecru	+$0
LBS	phantom cocoa	+$0
LBU	medium matte walnut	+$0
LBV	warm grey teak	+$0
LBB	oak on ash	+$0
LBC	walnut on ash	+$0
LBD	dark brown walnut	+$0
LBE	medium red walnut	+$0
LBF	neutral twill	+$0
LBG	sarum twill	+$0
LBH	earthen twill	+$0
LBJ	graphite twill	+$0
LBK	pewter mesh	+$0
LBL	steel mesh	+$0
LBM	crisp linen	+$0
LBN	classic linen	+$0
LBP	casual linen	+$0
LBQ	white twill	+$0
LU	soft white	+$0
WL	sandstone	+$0
WN	warm grey neutral	+$0

Wood Veneer

For veneer (W)

2U	light brown walnut	+$55
40	dark brown walnut	+$55
ET	clear on ash	+$55
EU	oak on ash	+$55
EV	walnut on ash	+$55

Step 9. Edge Finish

For laminate top/thermoplastic edge (L)

76	light brown walnut	+$0
8Q	folkstone grey	+$0
91	white	+$0
98	studio white	+$0
CL	cool grey neutral	+$0
LA	light ash	+$0
LBA	clear on ash	+$0
LBR	phantom ecru	+$0
LBS	phantom cocoa	+$0
LBU	medium matte walnut	+$0
LBV	warm grey teak	+$0
LBB	oak on ash	+$0
LBC	walnut on ash	+$0
LBD	dark brown walnut	+$0
LBE	medium red walnut	+$0
LBF	neutral twill	+$0
LBG	sarum twill	+$0
LBH	earthen twill	+$0
LBJ	graphite twill	+$0
LBK	pewter mesh	+$0
LBL	steel mesh	+$0
LBM	crisp linen	+$0
LBN	classic linen	+$0
LBP	casual linen	+$0
LBQ	white twill	+$0
WL	sandstone	+$0
WN	warm grey neutral	+$0
HF	inner tone light	+$0
HM	natural maple	+$0
HP	light anigre	+$0
HT	inner tone	+$0
HX	aged cherry	+$0
HY	walnut on cherry	+$0
LU	soft white	+$0

For laminate top/universal edge (U)

PLY	plywood edge A	+$50

Primary Work Surface, 120°

GNTAD.
GNTAF.
GNTAG.
GNTAN.

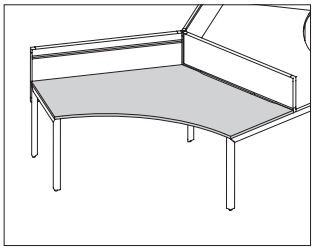

Product Information

Description

This squared-edge surface attaches to one set of 120° beams and Engage legs. It has a laminate top with thermoplastic edge, or a veneer top and edge. Surface is 1 1/8″ thick, and has several back edge options depending on application and access required.

Notes

When attaching a monitor arm or other item that clamps to the back edge of a surface, specify the flash gap (F), flash gap and access cutout (B), or flash gap and access door cutout (G).

The flash gap is 0.6″ deep and starts 7 5/8″ from each end. It is located on both wings of the surface.

Access cutout and access door cutout are specified on the left or right wing. For surfaces with access door cutout, an access door (GNPD.) must be ordered separately.

Order fixed attachment hardware pack (GNHDF.) separately.

For quick release attachment, order quick release attachment hardware pack (GNHDA.) separately, in addition to the fixed attachment hardware pack (GNHDF.).

Dimensions

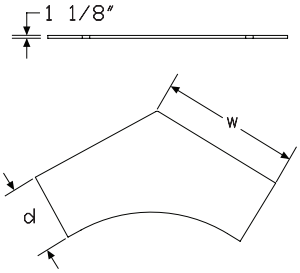

No Flash gap or Access door cutout

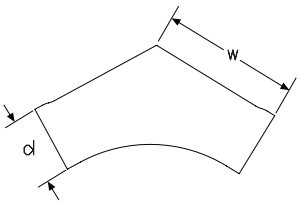

Flash gap

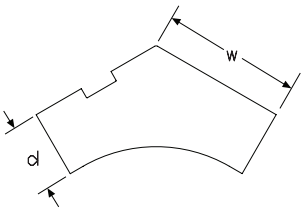

Access door cutout (Left Hand Version)

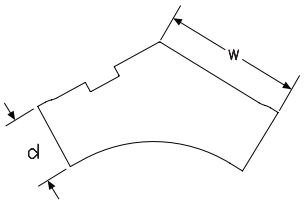

Flash gap and Access door cutout
(Left Hand Version)

Specification Information

Step 1.

GN

Step 2. Type

TA 120° primary surface

Step 3. Access Detail

D. access door cut-out A
G. flash gap and access door cut-out A
N. no flash gap or access door cut-out
F. flash gap

Step 4. Depth

24 24" deep
30 30" deep

Step 5. Width

48 48" wide
54 54" wide A
60 60" wide

Step 6. Attachment

For no flash gap or access door cut-out (N.) or flash gap (F.)

F no access door cutout, non-sliding

For access door cut-out (D.) or flash gap and access door cut-out (G.)

L left-hand access, non-sliding
R right-hand access, non-sliding

Step 7. Surface Material

L laminate top/thermoplastic edge
W veneer

Prices for Steps 1-7.

		FL	FW	LL	LW	RL	RW
GNTAD.24	**48**	—	—	$452	773	452	773
	54	—	—	$475	805	475	805
	60	—	—	$587	1000	587	1000
30	**48**	—	—	$462	792	462	792
	54	—	—	$486	826	486	826
	60	—	—	$599	1022	599	1022
GNTAG.24	**48**	—	—	$508	839	508	839
	54	—	—	$527	870	527	870
	60	—	—	$656	1081	656	1081
30	**48**	—	—	$519	858	519	858
	54	—	—	$538	889	538	889
	60	—	—	$668	1105	668	1105
GNTAN.24	**48**	$457	797	—	—	—	—
	54	$482	833	—	—	—	—
	60	$595	1033	—	—	—	—
30	**48**	$468	817	—	—	—	—
	54	$493	852	—	—	—	—
	60	$609	1056	—	—	—	—
GNTAF. 24	**48**	$501	840	—	—	—	—
	54	$521	872	—	—	—	—
	60	$648	1084	—	—	—	—
30	**48**	$511	861	—	—	—	—
	54	$531	892	—	—	—	—
	60	$661	1109	—	—	—	—

Step 8. Surface Finish

For laminate top/thermoplastic edge (L)

76	light brown walnut	+$0
91	white	+$0
98	studio white	+$0
8Q	folkstone grey	+$0
CL	cool grey neutral	+$0
HF	inner tone light	+$0
HM	natural maple	+$0
HP	light anigre	+$0
HT	inner tone	+$0
HX	aged cherry	+$0
HY	walnut on cherry	+$0
LA	light ash	+$0
LBA	clear on ash	+$0
LBR	phantom ecru	+$0
LBS	phantom cocoa	+$0
LBU	medium matte walnut	+$0
LBV	warm grey teak	+$0
LBB	oak on ash	+$0
LBC	walnut on ash	+$0
LBD	dark brown walnut	+$0
LBE	medium red walnut	+$0
LBF	neutral twill	+$0
LBG	sarum twill	+$0
LBH	earthen twill	+$0
LBJ	graphite twill	+$0
LBK	pewter mesh	+$0
LBL	steel mesh	+$0
LBM	crisp linen	+$0
LBN	classic linen	+$0
LBP	casual linen	+$0
LBQ	white twill	+$0
LU	soft white	+$0
WL	sandstone	+$0
WN	warm grey neutral	+$0

Wood Veneer

For veneer (W)

2U	light brown walnut	+$55
40	dark brown walnut	+$55
ET	clear on ash	+$55
EU	oak on ash	+$55
EV	walnut on ash	+$55

Step 9. Edge Finish

For laminate top/thermoplastic edge (L)

76	light brown walnut	+$0
8Q	folkstone grey	+$0
91	white	+$0
98	studio white	+$0
CL	cool grey neutral	+$0
HF	inner tone light	+$0
HM	natural maple	+$0
HP	light anigre	+$0
HT	inner tone	+$0
HX	aged cherry	+$0
HY	walnut on cherry	+$0
LA	light ash	+$0
LBA	clear on ash	+$0
LBR	phantom ecru	+$0
LBS	phantom cocoa	+$0
LBU	medium matte walnut	+$0
LBV	warm grey teak	+$0
LBB	oak on ash	+$0
LBC	walnut on ash	+$0
LBD	dark brown walnut	+$0
LBE	medium red walnut	+$0
LBF	neutral twill	+$0
LBG	sarum twill	+$0
LBH	earthen twill	+$0
LBJ	graphite twill	+$0
LBK	pewter mesh	+$0
LBL	steel mesh	+$0
LBM	crisp linen	+$0
LBN	classic linen	+$0
LBP	casual linen	+$0
LBQ	white twill	+$0
LU	soft white	+$0
WL	sandstone	+$0
WN	warm grey neutral	+$0

Hardware Pack, Fixed Surfaces

GNHDF.
GNHPF.
GNHSF.

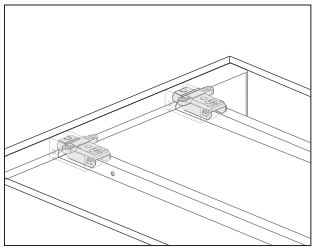

Product Information

Description

This hardware pack is required in order to connect a set of beams to a pair of Engage legs, and to provide a fixed attachment of a surface.

Notes

1 hardware pack is required for each beam kit specified. Meeting end surfaces (GNTDG., GNTDN.) require an additional 2 rectangular primary hardware packs (GNHPF.) per surface.

For quick release attachment, a quick release hardware pack (GNHPA., GNHDA.) can be added. Specify 1 hardware pack for each beam kit.

Specification Information

Step 1.

GNH

Step 2. Type

PF.	rectangular primary
DF.	120° - primary
SF.	return

Prices for Steps 1-2.

GNHPF.	$51
GNHDF.	$113
GNHSF.	$135

Hardware Pack, Quick Release Attachment

GNHDA.
GNHPA.

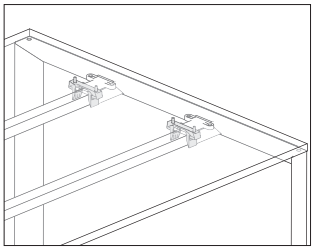

Product Information

Description

This hardware pack provides for the attachment and removal of surfaces without the use of any tools.

Notes

Specify 1 quick release hardware pack for each fixed attachment hardware pack (GNHDF., GNHPF., GNHSF.) specified.

Dimensions

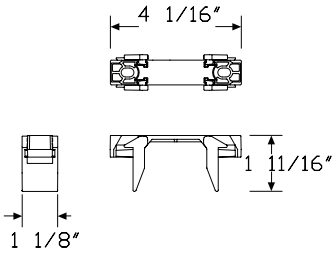

Specification Information

Step 1.

GNH

Step 2. Type

PA.	rectangular surface
DA.	120° surface

Prices for Steps 1-2.

GNHPA.	$18
GNHDA.	$27

Hardware Pack - Sliding - Rectangular Primary

GNHRS.

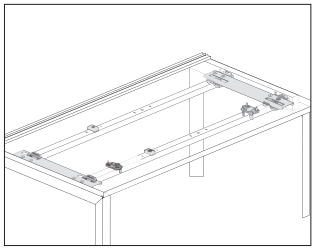

Product Information

Description

This hardware pack attaches a 24"-deep or 30"-deep rectangular primary surface to a set of beams when using a performance rail or when using a non-rail surface with the generic attachment option. It allows the surface to slide, providing access to a cable management tray.

Notes

Specify 1 hardware pack for each sliding surface.

Attaching clamp-mounted components to the back edge of a sliding surface may result in reduced surface extension.

Dimensions

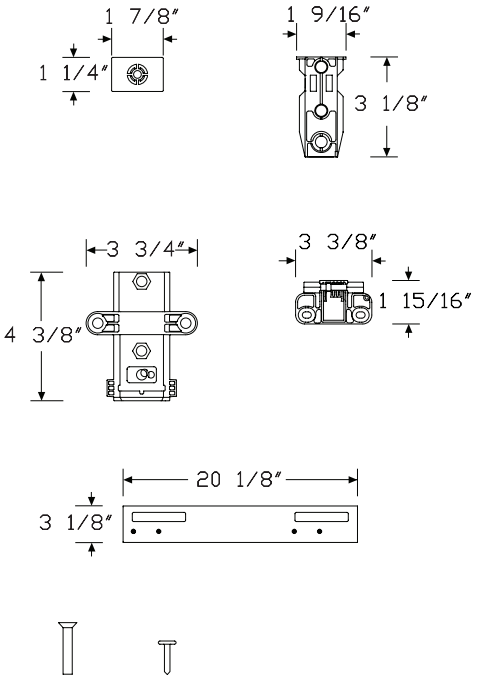

Specification Information

Step 1.

GNHRS. A

Step 2. Depth

24	for 24"-deep surface A	
30	for 30"-deep surface A	

Prices for Steps 1-2.

GNHRS.	**24**	$195
	30	$195

Hardware Pack, Sliding, Rectangular Primary Surface

GNHPS.

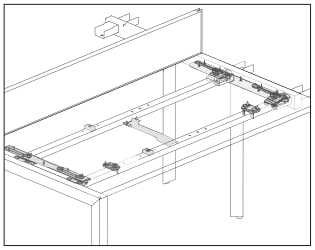

Product Information

Description

This hardware pack attaches a 30″-deep rectangular primary surface to a set of beams and allows the surface to slide, providing access to a cable management tray.

Notes

Must be used with surfaces specified as sliding.

Specify 1 hardware pack for each sliding surface.

Attaching clamp-mounted components to the back edge of a sliding surface may result in reduced surface extension.

Dimensions

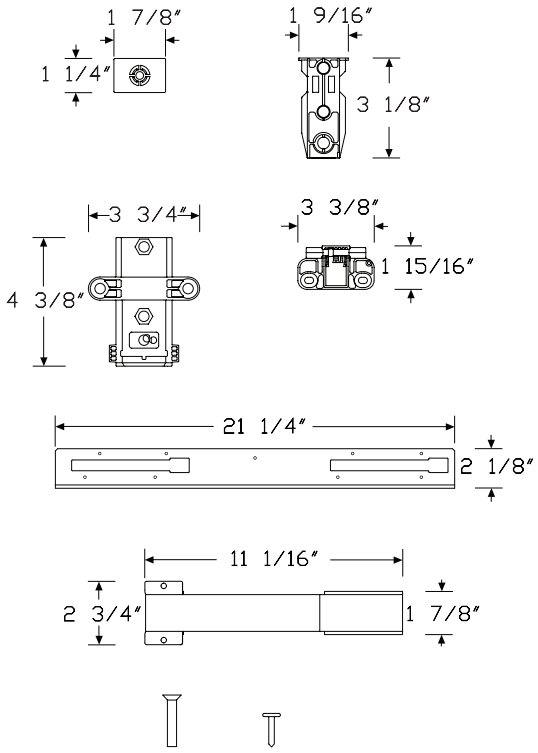

Specification Information

Step 1.

GNHPS.	$195

Pari Screen, Desk Up GNSDXT

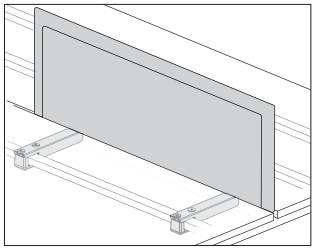

Product Information

Description

This frameless tackable fabric screen provides boundary above a surface at the back edge of a work surface in a back-to-back application. Attachment hardware included.

Notes

Screen width does not need to match beam width.

Extended width screens (GNSDXT.xxxxA) are available for use in 120° applications only. These screens are slightly wider than standard width screens and fill the gap created at the back corner where surfaces meet.

Screen attaches to rear beam with brackets supplied with screen. No additional hardware is needed.

Screen is shared in back-to-back applications.

Each screen ships with an alignment clip for use between screens when placed side-by-side.

All fabric is railroaded.

Screen accepts Customer's Own Material (COM). Yardage is estimated for nondirectional 54"-wide fabrics.

Width—Yardage

36—1.32
39—1.43
42—1.51
48—1.71
54—1.90
60—2.07
66—2.27
72—2.46

For information on multiple quantities or directional fabrics, contact COM Department. See Order Information in Appendices.

Dimensions

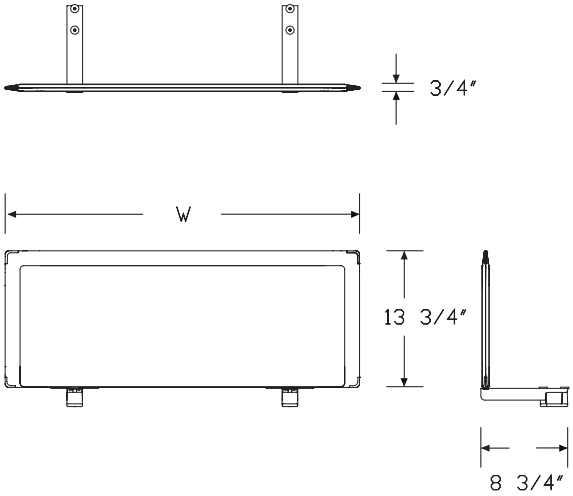

Specification Information

Step 1.

GN

Step 2. Type

SD desk up

Step 3. Configuration

X frameless

Step 4. Material

T. tackable fabric with tapered edge

Step 5. Height

42 42″ high
46 46″ high

Step 6. Width

36 36″ wide
39 39″ wide
42 42″ wide
48 48″ wide
54 54″ wide
60 60″ wide
66 66″ wide
72 72″ wide
48A 48″ wide, for use with 120-degree corner A
54A 54″ wide, for use with 120-degree corner A
60A 60″ wide, for use with 120-degree corner A

Prices for Steps 1-6.

		36	39	42	48	54	60
GNSDXT.	**42**	$618	655	676	706	745	787
	46	$634	672	691	721	762	806

		66	72	48A	54A	60A
GNSDXT.	**42**	$831	863	706	745	787
	46	$846	886	721	762	806

Step 7. Paint Finish

91	white	+$0
G1	graphite	+$0
MS	metallic silver	+$0

Step 8. Surface Finish

See application chart and textiles list for fabric usage and numbers. First 2 digits of number indicate fabric line; remaining digit(s) indicate fabric color.

	36	39	42	48	54
Price Category C	+$70	70	70	70	70
Price Category 1	+$0	0	0	0	0
Price Category 2	+$11	11	11	15	15
Price Category 3	+$27	27	27	36	36
Price Category 4	+$46	46	46	62	62
Price Category E	+$106	106	106	142	142

	60	66	72	48A	54A
Price Category C	+$70	70	70	70	75
Price Category 1	+$0	0	0	0	0
Price Category 2	+$15	15	15	15	18
Price Category 3	+$36	36	36	36	44
Price Category 4	+$62	62	62	62	76
Price Category E	+$142	142	142	142	174

	60A
Price Category C	+$75
Price Category 1	+$0
Price Category 2	+$18
Price Category 3	+$44
Price Category 4	+$76
Price Category E	+$174

Flat Edge Screen, Desk Up GNSDXS

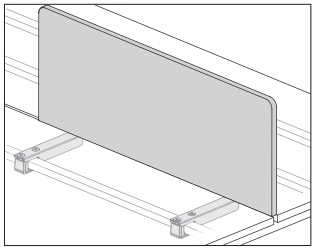

Product Information

Description

This tackable frameless fabric screen provides boundary above a surface at the back edge of the work surface in a back-to-back application. It has a flat edge and comes with an alignment clip to align 2 screens when placed side-by-side. Attachment hardware included.

Notes

Screen width does not need to match beam width.

Screen attaches to rear beam with provided brackets. No additional hardware is required.

When using 78″-wide beams, specify 2 39″-wide screens to provide full screen coverage. When using 84″-wide beams, specify 2 42″-wide screens. When using 96″-wide beams, specify 2 48″-wide screens.

When using screens with 120° beams/surfaces, specify screen widths with the A suffix (48A, 54A, 60A). These screens are slightly wider than their nominal width in order to fill the gap created at the back corner between 2 or 3 120° surfaces.

Screen is shared in back-to-back applications.

All fabric is railroaded.

Screen accepts Customer's Own Material (COM). Yardage is estimated for nondirectional 54″-wide fabrics.

Width—Yardage

36—1.32
39—1.42
42—1.51
48—1.70
54—1.89
60—2.08
66—2.27
72—2.46

For information on multiple quantities or directional fabrics, contact COM Department. See Order Information in Appendices.

Dimensions

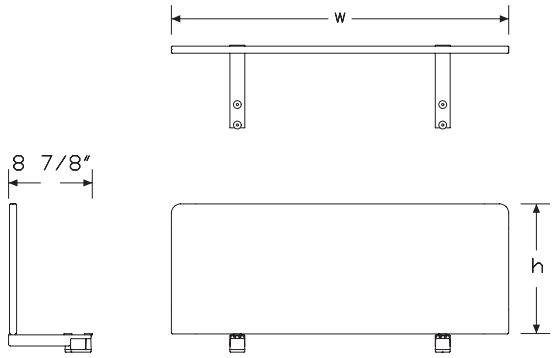

Specification Information

Step 1.

GN A

Step 2. Type

SD desk up A

Step 3. Configuration

X frameless A

Step 4. Material

S. tackable fabric with flat edge A

Step 5. Height

42 42″ high A
46 46″ high A

Step 6. Width

36 36″ wide A
39 39″ wide A
42 42″ wide A
48 48″ wide A
48A 48″ wide, for use with 120-degree corner A
54 54″ wide A
54A 54″ wide, for use with 120-degree corner A
60 60″ wide A
60A 60″ wide, for use with 120-degree corner A
66 66″ wide A
72 72″ wide A

Prices for Steps 1-6.

		36	39	42	48	48A	54
GNSDXS.	**42**	$350	370	390	410	410	430
	46	$366	385	405	425	425	449

		54A	60	60A	66	72
GNSDXS.	**42**	$430	450	450	475	500
	46	$449	473	473	491	522

Step 7. Paint Finish

91 white A +$0
G1 graphite A +$0
MS metallic silver A +$0

Step 8. Surface Finish

Price Category C	+$88
Price Category 1	+$0
Price Category 2	+$12
Price Category 3	+$20
Price Category 4	+$32
Price Category E	+$136

Layout Studio® Laminate Screen, Desk Up

GNSDL.
GNSDU.

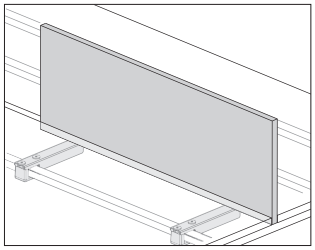

Product Information

Description

This laminate screen provides boundary above a surface at the back edge of a work surface in a back-to-back application. Attachment hardware included.

Notes

Screen attaches to rear beam with included brackets. No additional hardware is needed.

Screen is shared in back-to-back applications.

To align screens in a run and display name tags, order Ubi nametag clip (Y1121.) separately and place over the seam between laminate screens.

Specify screen width to match beam width.

Dimensions

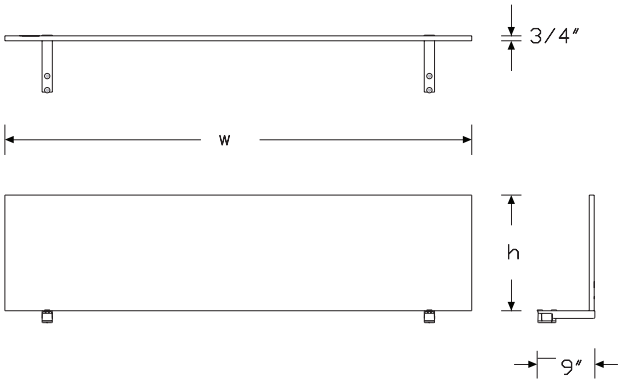

Specification Information

Step 1.

GN A

Step 2. Type

SD desk up A

Step 3. Surface Material

L. laminate/thermoplastic edge
U. laminate/universal edge

Step 4. Height

42 42″ high
46 46″ high

Step 5. Width

36 36″ wide A
39 39″ wide A
42 42″ wide A
48 48″ wide A
48A 48″ wide, for use with 120-degree corner A
54 54″ wide A
54A 54″ wide, for use with 120-degree corner A
60 60″ wide A
60A 60″ wide, for use with 120-degree corner A
66 66″ wide A
72 72″ wide A

Prices for Steps 1-5.

		36	39	42	48	48A	54
GNSDL.	**42**	$260	277	294	311	311	328
	46	$277	294	311	328	328	345

		54A	60	60A	66	72
GNSDL.	**42**	$328	345	345	353	360
	46	$345	362	362	370	377

		36	39	42	48	48A	54
GNSDU.	**42**	$260	277	294	311	311	328
	46	$277	294	311	328	328	345

		54A	60	60A	66	72
GNSDU.	**42**	$328	345	345	353	360
	46	$345	362	362	370	377

Step 6. Grain Direction		
For 36" wide (36), 39" wide (39), 42" wide (42), 48" wide (48), 48" wide, for use with 120-degree corner (48A), 54" wide (54), 54" wide, for use with 120-degree corner (54A), 60" wide (60), or 60" wide, for use with 120-degree corner (60A)		
VTG	vertical grain A	+$0
HRG	horizontal grain A	+$0
For 66" wide (66) or 72" wide (72)		
HRG	horizontal grain A	+$0

Step 7. Bracket Finish		
91	white	+$0
G1	graphite	+$0
MS	metallic silver	+$0

Step 8. Surface Material		
76	light brown walnut	+$0
8Q	folkstone grey	+$0
91	white	+$0
98	studio white	+$0
CL	cool grey neutral	+$0
HM	natural maple	+$0
HP	light anigre	+$0
HX	aged cherry	+$0
HY	walnut on cherry	+$0
LA	light ash	+$0
LBA	clear on ash	+$0
LBB	oak on ash	+$0
LBC	walnut on ash	+$0
LBD	dark brown walnut	+$0
LBE	medium red walnut	+$0
LBF	neutral twill	+$0
LBG	sarum twill	+$0
LBH	earthen twill	+$0
LBJ	graphite twill	+$0
LBK	pewter mesh	+$0
LBL	steel mesh	+$0
LBM	crisp linen	+$0
LBN	classic linen	+$0
LBP	casual linen	+$0
LBQ	white twill	+$0
LBR	phantom ecru	+$0
LBS	phantom cocoa	+$0
LBU	medium matte walnut	+$0
LBV	warm grey teak	+$0
LU	soft white	+$0
WL	sandstone	+$0
WN	warm grey neutral	+$0
X1	chalk white	+$0

Step 9. Edge Finish		
For laminate/thermoplastic edge (L.)		
76	light brown walnut	+$0
8Q	folkstone grey	+$0
91	white	+$0
98	studio white	+$0
BU	black umber	+$0
CL	cool grey neutral	+$0
HF	inner tone light	+$0
HM	natural maple	+$0
HP	light anigre	+$0

Layout Studio® Laminate Screen, Desk Up *continued*

HX	aged cherry	+$0
HY	walnut on cherry	+$0
LA	light ash	+$0
LBA	clear on ash	+$0
LBR	phantom ecru	+$0
LBS	phantom cocoa	+$0
LBU	medium matte walnut	+$0
LBV	warm grey teak	+$0
LBB	oak on ash	+$0
LBC	walnut on ash	+$0
LBD	dark brown walnut	+$0
LBE	medium red walnut	+$0
LBF	neutral twill	+$0
LBG	sarum twill	+$0
LBH	earthen twill	+$0
LBJ	graphite twill	+$0
LBK	pewter mesh	+$0
LBL	steel mesh	+$0
LBM	crisp linen	+$0
LBN	classic linen	+$0
LBP	casual linen	+$0
LBQ	white twill	+$0
LU	soft white	+$0
MT	medium tone	+$0
WL	sandstone	+$0
WN	warm grey neutral	+$0
For laminate/universal edge (U.)		
PLY	plywood edge	+$50

Framed Screen, Desk Up

GNSDFT
GNSDNT
GNSDTT

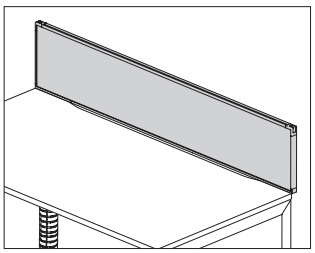

Product Information

Description

This fabric screen provides boundary above a surface at the back edge of a work surface. It is tackable, has a painted metal frame, and provides varying levels of work tool attachment.

The screen can be placed most anywhere along the beam and does not need to match beam widths.

Notes

Screen attaches to rear beam with brackets. Order desk up attachment brackets (GNSA.) separately.

For top rail and face rail hanging screens, levelers should be applied to each work tool to ensure that the tool hangs properly. Each screen ships with enough levelers for 4 work tools. Additional levelers are available as a service part (U1BDV55).

For top rail and face rail hanging screens, a maximum of 2 work tools can be used per side.

For top rail and face rail hanging screens, see Layout Studio planning guide for work tool compatibility.

Order the following finishing hardware and connectors separately:

- Connector finishing kit (GNSE.)
- In-line connector kit (GNSH.)
- Post connector kit (GNSJ.)

When used in a back-to-back application, the screen is shared.

All fabric is railroaded.

Screen accepts Customer's Own Material (COM). Yardage is estimated for nondirectional 54″-wide fabrics.

Width—Yardage
36—1.23
42—1.41
48—1.61
54—1.80
60—1.99
66—2.18
72—2.37
78—2.55

For information on multiple quantities or directional fabrics, contact COM Department. See Order Information in Appendices.

Dimensions

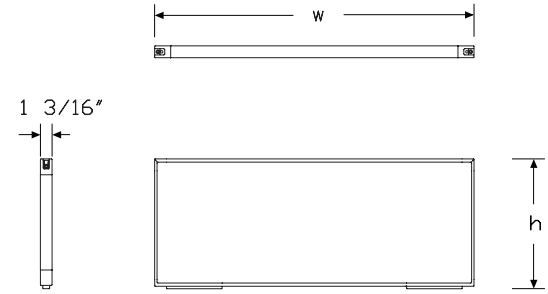

Non Hanging

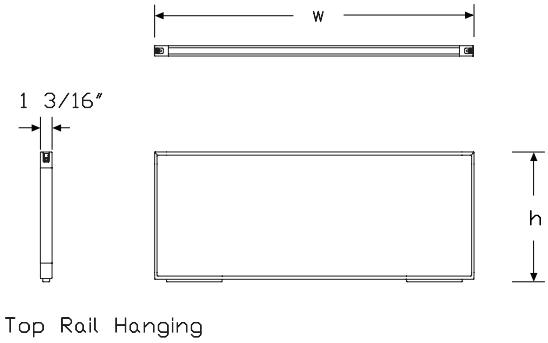

Top Rail Hanging

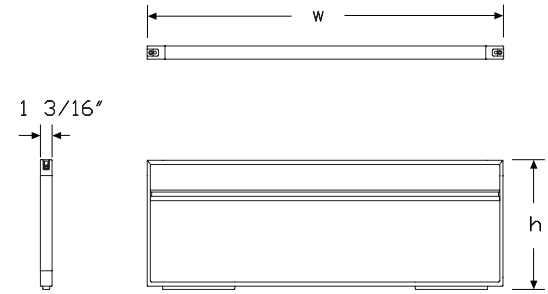

Face Rail Hanging

Specification Information

Step 1.

GN

Step 2. Type

SD	desk up

Step 3. Configuration

N	non hanging
T	top rail hanging
F	face rail hanging

Step 4. Material

T.	tackable fabric

Step 5. Height

42	42″ high
46	46″ high

Step 6. Width

36	36″ wide
42	42″ wide
48	48″ wide
54	54″ wide A
60	60″ wide
66	66″ wide A
72	72″ wide
78	78″ wide

Prices for Steps 1-6.

		36	42	48	54	60	66
GNSDNT.	**42**	$396	443	467	586	530	667
	46	$409	455	478	604	546	680

		72	78
GNSDNT.	**42**	$593	731
	46	$611	757

GNSDTT.	**42**	$391	438	461	578	524	659
	46	$404	450	472	596	540	672

		72	78
GNSDTT.	**42**	$586	721
	46	$603	747

GNSDFT.	**42**	$536	603	664	694	723	803
	46	$549	620	685	711	739	819

		72	78
GNSDFT.	**42**	$883	964
	46	$902	978

Step 7. Trim Finish

91	white	+$0
G1	graphite	+$0
MS	metallic silver	+$0

Step 8. Surface Finish

See application chart and textiles list for fabric usage and numbers. First 2 digits of number indicate fabric line; remaining digit(s) indicate fabric color.

Price Category C	+$0
Price Category 1	+$0
Price Category 2	+$10
Price Category 3	+$24
Price Category 4	+$42
Price Category 5	+$70

Glass Screen, Desk Up, Frameless GNSDXG

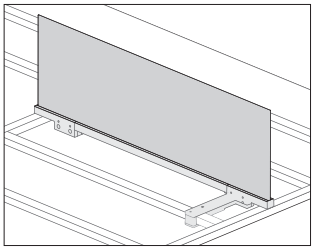

Product Information

Description

This frameless glass screen provides boundary above a surface at the back edge of a work surface in a back-to-back application. It has a painted metal frame. Attachment hardware included.

Notes

Screen attaches to rear beam with brackets supplied with screen. No additional hardware is needed.

Screen is shared and must be used in a back-to-back application.

Dimensions

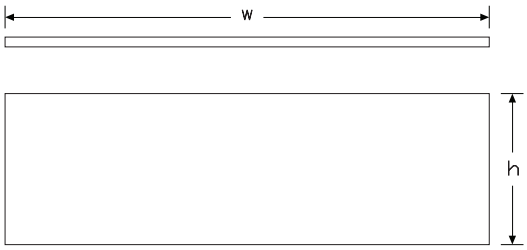

Specification Information

Step 1.

GN

Step 2. Type

SD	desk up

Step 3. Configuration

X	frameless

Step 4. Material

G.	glass

Step 5. Height

42	42″ high
46	46″ high

Step 6. Width

36	36″ wide
42	42″ wide
48	48″ wide
54	54″ wide A
60	60″ wide
66	66″ wide A
72	72″ wide
78	78″ wide A
84	84″ wide
96	96″ wide

Step 7. Surface Finish

TR	clear glass - 1/4″ thick
5A	opal etched - 1/4″ thick
NN	no glass- for customer's own 1/4 thick glass
C3	clear glass - 3/8″ thick
G3	opal glass - 3/8″ thick
N3	no glass, for customer's own 3/8″ thick glass

Glass Screen, Desk Up, Frameless

continued

Prices for Steps 1-7.							
		TR	**5A**	**NN**	**C3**	**G3**	**N3**
GNSDXG. 42	**36**	$449	526	327	526	615	327
	42	$471	563	349	558	664	349
	48	$493	598	365	594	721	365
	54	$524	640	388	638	779	388
	60	$552	680	411	679	838	411
	66	$587	721	435	716	882	435
	72	$621	763	458	754	926	458
	78	$659	805	485	797	974	485
	84	$1059	1263	782	1252	1492	782
	96	$1107	1343	818	1335	1622	818
46	**36**	$469	569	327	600	689	327
	42	$495	610	349	603	744	349
	48	$520	654	365	650	818	365
	54	$555	706	388	695	886	388
	60	$589	761	411	739	953	411
	66	$624	815	435	795	1037	435
	72	$659	870	458	849	1121	458
	78	$696	925	485	904	1209	485
	84	$1113	1372	782	1356	1673	782
	96	$1167	1469	818	1461	1840	818

Step 8. Trim Finish		
91	white	+$0
G1	graphite	+$0
MS	metallic silver	+$0

Pari Screen, Modesty GNSMXT

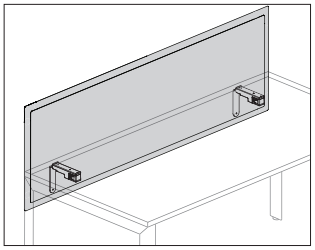

Product Information

Description

This frameless tackable fabric screen provides boundary above and below a surface at the back edge of a work surface in a single-sided application or on a return surface. Attachment hardware included.

Notes

Screen width does not need to match beam width.

Extended width screens (GNSMXT.xxxxA) are available for use in 120° applications only. These screens are slightly wider than standard width screens and fill the gap created at the back corner where surfaces meet.

Screen attaches to rear beam with brackets that are provided; no additional attachment hardware is required.

Screen will hang approximately 9 3/4″ below the surface.

Each screen ships with an alignment clip for use between screens when placed side-by-side.

All fabric is railroaded.

Screen accepts Customer's Own Material (COM). Yardage is estimated for nondirectional 54″-wide fabrics.

Width—Yardage
36—2.66
39—2.83
42—3.02
48—3.41
54—3.78
60—4.17
66—4.54
72—4.92

For information on multiple quantities or directional fabrics, contact COM Department. See Order Information in Appendices.

Dimensions

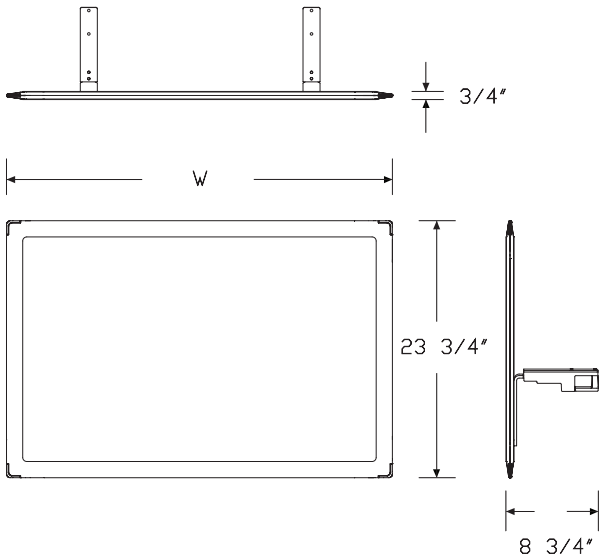

Specification Information

Step 1.

GN

Step 2. Type

SM	modesty

Step 3. Configuration

X	frameless

Step 4. Material

T.	tackable fabric with tapered edge

Step 5. Height

42	42" high
46	46" high

Step 6. Width

36	36" wide
39	39" wide
42	42" wide
48	48" wide
54	54" wide
60	60" wide
66	66" wide
72	72" wide
48A	48" wide, for use with 120-degree corner A
54A	54" wide, for use with 120-degree corner A
60A	60" wide, for use with 120-degree corner A

Prices for Steps 1-6.

	36	**39**	**42**	**48**	**54**	**60**
GNSMXT. 42	$661	703	724	754	796	839
46	$678	719	740	770	816	863

	66	**72**	**48A**	**54A**	**60A**
GNSMXT. 42	$888	925	754	796	839
46	$905	948	770	816	863

Step 7. Paint Finish

91	white	+$0
G1	graphite	+$0
MS	metallic silver	+$0

Step 8. Surface Finish

See application chart and textiles list for fabric usage and numbers. First 2 digits of number indicate fabric line; remaining digit(s) indicate fabric color.

	36	**39**	**42**	**48**	**54**
Price Category C	+$70	70	70	70	70
Price Category 1	+$0	0	0	0	0
Price Category 2	+$22	22	22	29	29
Price Category 3	+$53	53	53	70	70
Price Category 4	+$92	92	92	122	122
Price Category E	+$211	211	211	280	280

	60	**66**	**72**	**48A**	**54A**
Price Category C	+$70	70	70	70	75
Price Category 1	+$0	0	0	0	0
Price Category 2	+$29	29	29	29	37
Price Category 3	+$70	70	70	70	89
Price Category 4	+$122	122	122	122	155
Price Category E	+$280	280	280	280	355

	60A
Price Category C	+$75
Price Category 1	+$0
Price Category 2	+$37
Price Category 3	+$89
Price Category 4	+$155
Price Category E	+$355

Flat Edge Screen, Modesty GNSMXS

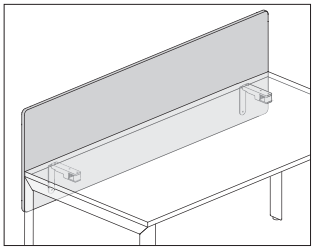

Product Information

Description

This tackable frameless fabric screen provides boundary above and below a surface at the back edge of the work surface in a single-sided application or on a return surface. It has a flat edge and comes with an alignment clip to align 2 screens when placed side-by-side. Attachment hardware included.

Notes

Screen width does not need to match beam width.

Screen attaches to rear beam with provided brackets. No additional hardware is required.

Screen extends approximately 9½" below the surface.

When using 78"-wide beams, specify 2 39"-wide screens to provide full screen coverage. When using 84"-wide beams, specify 2 42"-wide screens. When using 96"-wide beams, specify 2 48"-wide screens.

All fabric is railroaded.

Screen accepts Customer's Own Material (COM). Yardage is estimated for nondirectional 54"-wide fabrics.

For 42" high:

Width—Yardage

36—1.32
39—1.42
42—1.51
48—1.70
54—1.89
60—2.08
66—2.27
72—2.46

For 46" high:

Width—Yardage

36—2.65
39—2.84
42—3.02
48—3.40
54—3.78
60—4.16
66—4.54
72—4.91

For information on multiple quantities or directional fabrics, contact COM Department. See Order Information in Appendices.

Dimensions

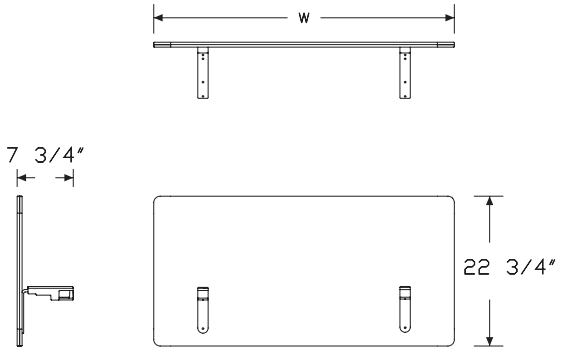

Specification Information

Step 1.

GN A

Step 2. Type

SM modesty A

Step 3. Configuration

X frameless A

Step 4. Material

S. tackable fabric with flat edge A

Step 5. Height

42 42" high A
46 46" high A

Step 6. Width

36 36" wide A
39 39" wide A
42 42" wide A
48 48" wide A
48A 48" wide, for use with 120-degree corner A
54 54" wide A
54A 54" wide, for use with 120-degree corner A
60 60" wide A
60A 60" wide, for use with 120-degree corner A
66 66" wide A
72 72" wide A

Prices for Steps 1-6.

		36	39	42	48	48A	54
GNSMXS.	**42**	$505	528	550	572	572	594
	46	$522	543	565	587	587	614

		54A	60	60A	66	72
GNSMXS.	**42**	$594	617	617	647	677
	46	$614	640	640	663	699

Step 7. Paint Finish

91 white A +$0
G1 graphite A +$0
MS metallic silver A +$0

Step 8. Surface Finish

Price Category C +$89
Price Category 1 +$0
Price Category 2 +$12
Price Category 3 +$20
Price Category 4 +$32
Price Category E +$136

Layout Studio® Laminate Screen, Modesty

GNSML.
GNSMU.

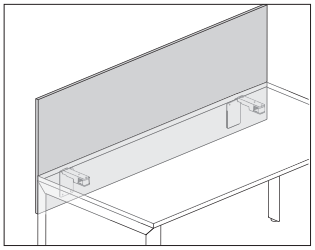

Product Information

Description

This laminate screen provides boundary above and below a surface at the back edge of the work surface in a single-sided application or on a return surface. Attachment hardware included.

Notes

Screen width does not need to match beam width.

Screen attaches to rear beam with included brackets. No additional hardware is needed.

Screen extends approximately 9½" below the surface.

When using 78"-wide beams, specify 2 39"-wide screens to provide full screen coverage. When using 84"-wide beams, specify 2 42"-wide screens. When using 96"-wide beams, specify 2 48"-wide screens.

To align screens in a run and display name tags, order Ubi nametag clip (Y1121.) separately and place over the seam between laminate screens.

Dimensions

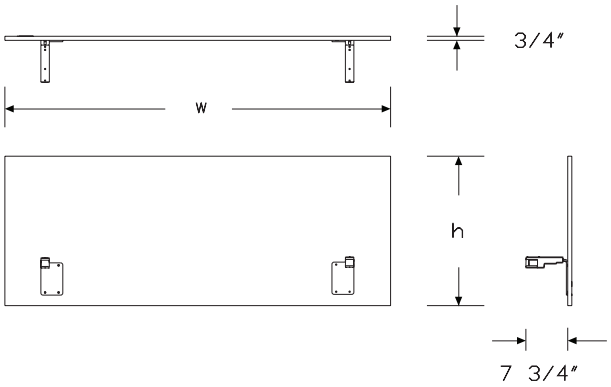

Specification Information

Step 1.

GN A

Step 2. Type

SM modesty A

Step 3. Surface Material

L. laminate/thermoplastic edge A
U. laminate/universal edge A

Step 4. Height

42 42" high A
46 46" high A

Step 5. Width

36 36" wide A
39 39" wide A
42 42" wide A
48 48" wide A
48A 48" wide, for use with 120-degree corner A
54 54" wide A
54A 54" wide, for use with 120-degree corner A
60 60" wide A
60A 60" wide, for use with 120-degree corner A
66 66" wide A
72 72" wide A

Prices for Steps 1-5.

	36	39	42	48	48A	54
GNSML.42	$325	335	345	355	355	365
46	$344	354	364	374	374	384

	54A	60	60A	66	72
GNSML. 42	$365	375	375	388	400
46	$384	394	394	407	419

GNSMU.42	$325	335	345	355	355	365
46	$344	354	364	374	374	384

	54A	60	60A	66	72
GNSMU.42	$365	375	375	388	400
46	$384	394	394	407	419

Step 6. Grain Direction		
For 36" wide (36), 39" wide (39), 42" wide (42), 48" wide (48), 48" wide, for use with 120-degree corner (48A), 54" wide (54), 54" wide, for use with 120-degree corner (54A), 60" wide (60), or 60" wide, for use with 120-degree corner (60A)		
VTG	vertical grain A	+$0
HRG	horizontal grain A	+$0
For 66" wide (66) or 72" wide (72)		
HRG	horizontal grain A	+$0

Step 7. Bracket Finish		
91	white A	+$0
G1	graphite A	+$0
MS	metallic silver A	+$0

Step 8. Surface Finish		
76	light brown walnut A	+$0
8Q	folkstone grey A	+$0
91	white A	+$0
98	studio white A	+$0
CL	cool grey neutral A	+$0
HM	natural maple A	+$0
HP	light anigre A	+$0
HX	aged cherry A	+$0
HY	walnut on cherry A	+$0
LA	light ash A	+$0
LBA	clear on ash A	+$0
LBB	oak on ash A	+$0
LBC	walnut on ash A	+$0
LBD	dark brown walnut A	+$0
LBE	medium red walnut A	+$0
LBF	neutral twill A	+$0
LBG	sarum twill A	+$0
LBH	earthen twill A	+$0
LBJ	graphite twill A	+$0
LBK	pewter mesh A	+$0
LBL	steel mesh A	+$0
LBM	crisp linen A	+$0
LBN	classic linen A	+$0
LBP	casual linen A	+$0
LBQ	white twill A	+$0
LBR	phantom ecru A	+$0
LBS	phantom cocoa A	+$0
LBU	medium matte walnut A	+$0
LBV	warm grey teak A	+$0
LU	soft white A	+$0
WL	sandstone A	+$0
WN	warm grey neutral A	+$0
X1	chalk white A	+$0

Step 9. Edge Finish		
For laminate/thermoplastic edge (L.)		
76	light brown walnut A	+$0
8Q	folkstone grey A	+$0
91	white A	+$0
98	studio white A	+$0
BU	black umber A	+$0
CL	cool grey neutral A	+$0
HF	inner tone light A	+$0
HM	natural maple A	+$0
HP	light anigre A	+$0

Layout Studio® Laminate Screen, Modesty *continued*

HX	aged cherry A	+$0
HY	walnut on cherry A	+$0
LA	light ash A	+$0
LBA	clear on ash A	+$0
LBR	phantom ecru A	+$0
LBS	phantom cocoa A	+$0
LBU	medium matte walnut A	+$0
LBV	warm grey teak A	+$0
LBB	oak on ash A	+$0
LBC	walnut on ash A	+$0
LBD	dark brown walnut A	+$0
LBE	medium red walnut A	+$0
LBF	neutral twill A	+$0
LBG	sarum twill A	+$0
LBH	earthen twill A	+$0
LBJ	graphite twill A	+$0
LBK	pewter mesh A	+$0
LBL	steel mesh A	+$0
LBM	crisp linen A	+$0
LBN	classic linen A	+$0
LBP	casual linen A	+$0
LBQ	white twill A	+$0
LU	soft white A	+$0
MT	medium tone A	+$0
WL	sandstone A	+$0
WN	warm grey neutral A	+$0

For laminate/universal edge (U.)

PLY	plywood edge A	+$50

Framed Screen, Modesty GNSMNT

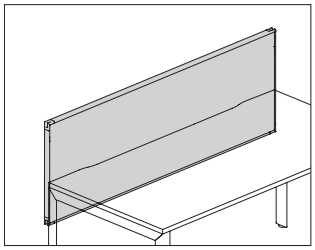

Product Information

Description

This fabric screen provides boundary above and below a surface in a single-sided application or return surface, at the back edge of a work surface. It is tackable and has a painted metal frame.

The screen can be placed most anywhere along the beam and does not need to match beam widths.

Notes

Screen attaches to rear beam with brackets. Order modesty attachment brackets (GNSB.) separately.

Screen will hang approximately 9¾" below the surface.

Order the following finishing hardware and connectors separately:

- Connector finishing kit (GNSE.)
- In-line connector kit (GNSH.)
- Post connector kit (GNSJ.)

Not recommended for a back-to-back application.

All fabric is railroaded.

Screen accepts Customer's Own Material (COM). Yardage is estimated for nondirectional 54"-wide fabrics.

Width—Yardage

36—1.23
42—1.41
48—1.61
54—1.80
60—1.99
66—2.18
72—2.37
78—2.55

For information on multiple quantities or directional fabrics, contact COM Department. See Order Information in Appendices.

Dimensions

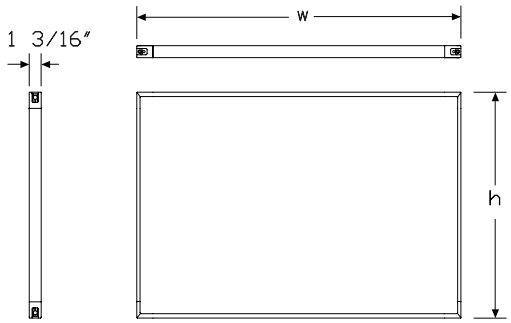

Specification Information

Step 1.

GN

Step 2. Type

SM modesty

Step 3. Configuration

N non hanging

Step 4. Material

T. tackable fabric

Step 5. Height

42 42" high
46 46" high

Step 6. Width

36 36" wide
42 42" wide
48 48" wide
54 54" wide
60 60" wide
66 66" wide
72 72" wide
78 78" wide

Prices for Steps 1-6.

		36	42	48	54	60	66
GNSMNT.	**42**	$498	536	573	614	658	697
	46	$520	561	596	633	669	714

		72	78
GNSMNT.	**42**	$738	776
	46	$760	804

Step 7. Trim Finish

91	white	+$0
G1	graphite	+$0
MS	metallic silver	+$0

Step 8. Surface Finish

See application chart and textiles list for fabric usage and numbers. First 2 digits of number indicate fabric line; remaining digit(s) indicate fabric color.

	36	**42**	**48**	**54**	**60**
Price Category C	+$0	0	0	0	0
Price Category 1	+$0	0	0	0	0
Price Category 2	+$10	10	13	13	15
Price Category 3	+$24	24	31	31	35
Price Category 4	+$42	42	54	54	61
Price Category 5	+$70	70	91	91	103

	66	**72**	**78**
Price Category C	+$0	0	0
Price Category 1	+$0	0	0
Price Category 2	+$15	18	18
Price Category 3	+$35	44	44
Price Category 4	+$61	76	76
Price Category 5	+$103	127	127

Personal Side Screen, Delineation GNSPXT

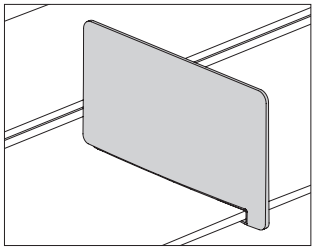

Product Information

Description

This tackable frameless fabric screen provides boundary between workers seated side-by-side, and attaches to the front edge of a squared-edge Layout Studio® surface. It has an edge profile that is complementary to both Pari and flat-edge screens.

Notes

Screen is 13″H × 22″D.

Mid-run (M) screen can be placed anywhere along the front edge of a back-to-back application, except directly above an end leg, or above an intermediate leg on a single-sided application. Screen can be moved by the user.

All fabric is railroaded.

Dimensions

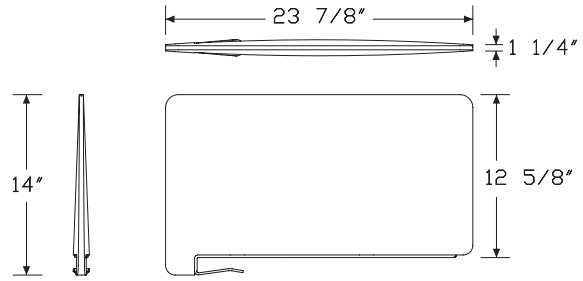

Delineation Mid Screen

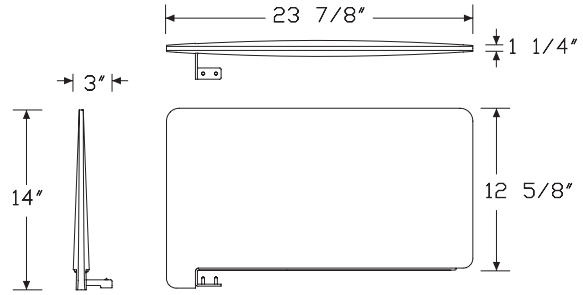

Delineation End Screen, Left

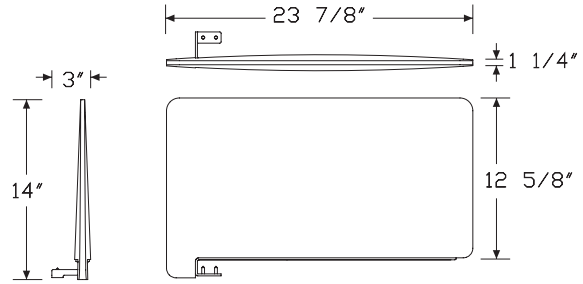

Delineation End Screen, Right

Personal Side Screen, Delineation

continued

Specification Information		
Step 1.		
GN A		
Step 2. Type		
SP	delineation A	
Step 3. Configuration		
XT.	frameless fabric A	
Step 4. Placement		
M	mid-run on back-to-back applications A	
Prices for Steps 1-4.		
GNSPXT. M		$351
Step 5. Bracket Finish		
91	white A	+$0
G1	graphite A	+$0
MS	metallic silver A	+$0
Step 6. Surface Finish		
Price Category C		+$0
Price Category 1		+$0
Price Category 2		+$6
Price Category 3		+$10
Price Category 4		+$21

Framed Screen, Delineation GNSPNT

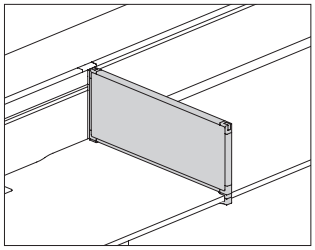

Product Information

Description

This fabric screen provides boundary between people seated side-by-side and attaches to the front edge of a squared-edge Layout Studio surface. It is tackable and has a painted metal frame.

Notes

Screen can be placed anywhere along front edge of a surface except on top of a desk end leg.

Screen width aligns with the depth of a work surface with flash gap.

Screen attaches to front edge of a work surface with a bracket. Order delineation screen attachment bracket (GNSC.) separately.

Order connector finishing kit (GNSE.) separately.

All fabric is railroaded.

Screen accepts Customer's Own Material (COM). Yardage is estimated for nondirectional 54"-wide fabrics.

Width—Yardage

24—0.84

30—1.00

36—1.19

For information on multiple quantities or directional fabrics, contact COM Department. See Order Information in Appendices.

Dimensions

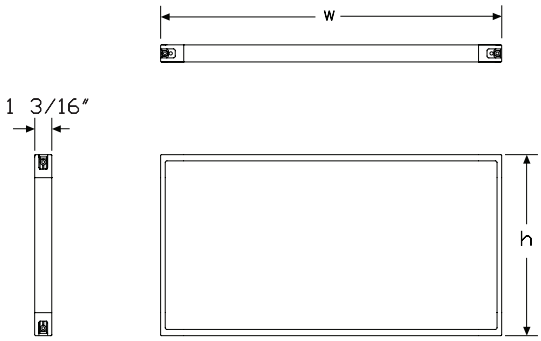

Specification Information

Step 1.

GN

Step 2. Type

SP delineation

Step 3. Configuration

N non hanging

Step 4. Material

T. tackable fabric

Step 5. Height

42 42" high

46 46" high

Step 6. Width

24 24" wide

30 30" wide

36 36" wide

Prices for Steps 1-6.

		24	30	36
GNSPNT.	**42**	$273	321	365
	46	$286	336	379

Step 7. Trim Finish

91	white	+$0
G1	graphite	+$0
MS	metallic silver	+$0

Step 8. Surface Finish

See application chart and textiles list for fabric usage and numbers. First 2 digits of number indicate fabric line; remaining digit(s) indicate fabric color.

Price Category C	+$0
Price Category 1	+$0
Price Category 2	+$8
Price Category 3	+$18
Price Category 4	+$32
Price Category 5	+$54

Screen Brackets

GNSA.
GNSB.
GNSC.

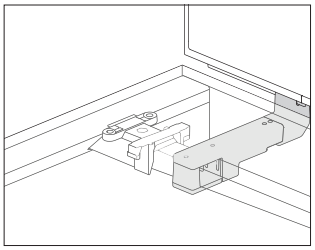

Product Information

Description

These brackets provide the attachment for the desk up, modesty, and delineation screens.

Notes

Specify 1 package for each screen.

Dimensions

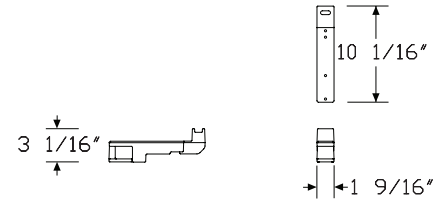

Desk Up

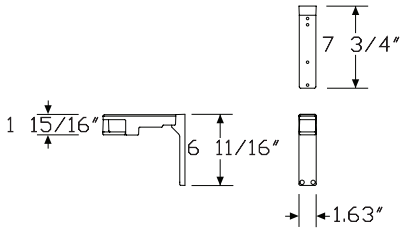

Modesty

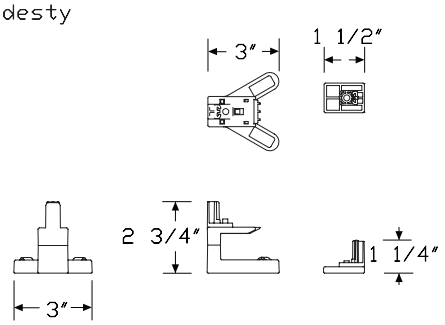

Delineation

Specification Information

Step 1.

GNS

Step 2. Type

A.	desk up
B.	modesty
C.	delineation

Prices for Steps 1-2.

GNSA.	$108
GNSB.	$174
GNSC.	$49

Step 3. Finish

91	white	+$0
G1	graphite	+$0
MS	metallic silver	+$0

Screen Connectors

GNSE.
GNSH.
GNSJ.

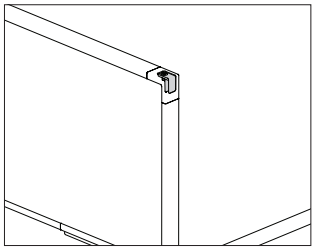

Product Information

Description

These connectors finish the exposed corners of a screen. Quantity of 2.

Notes

Specify the finishing kit (GNSE.) to finish the corner of a screen when not connecting to another screen or corner post.

Specify the in-line connector kit (GNSH.) where 2 screens meet.

Specify the post connector kit (GNSJ.) when connecting a screen to a corner post.

When using desk up screens, appropriate kits must be specified for the top of the screen only.

Modesty screens require kits for the top and bottom of the screen.

Dimensions

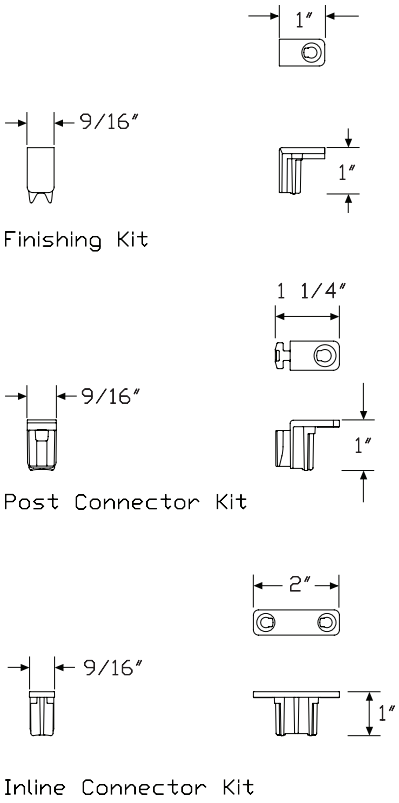

Specification Information

Step 1.

GN

Step 2. Type

SE.	finishing kit
SH.	inline connector kit
SJ.	post connector kit

Prices for Steps 1-2.

GNSE.	$15
GNSH.	$16
GNSJ.	$14

Step 3. Trim Finish

91	white	+$0
G1	graphite	+$0
MS	metallic silver	+$0

Corner Post

GNSND.
GNSNM.

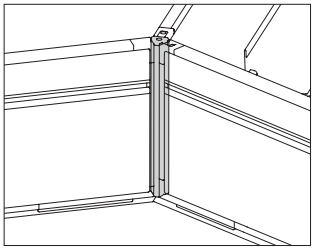

Product Information

Description

This corner post fills the open space created when screens come together at 120°.

Notes

Specify corner post to match height of attaching screens.

Dimensions

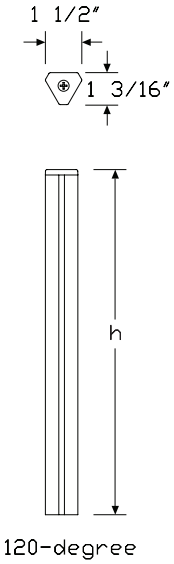

Specification Information

Step 1.

GN

Step 2. Type

SN	120°

Step 3. Configuration

D.	desk up
M.	modesty

Step 4. Height

42	42″ high
46	46″ high

Prices for Steps 1-4.

GNSND.	**42**	$34
	46	$41
GNSNM.	**42**	$45
	46	$51

Step 5. Trim Finish

91	white	+$0
G1	graphite	+$0
MS	metallic silver	+$0

Frameless Glass Screen Filler Kit GNSX.

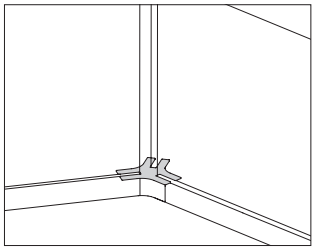

Product Information

Description

This trim piece fills the gap between 3 frameless glass screens in a 120° corner application.

Dimensions

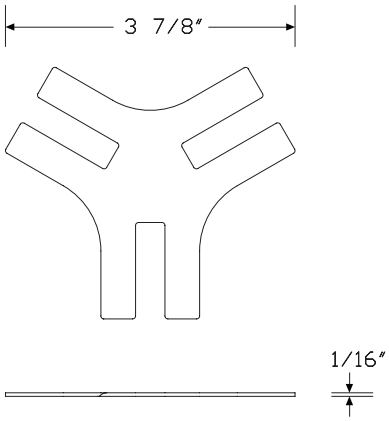

Specification Information

Step 1.

GN

Step 2. Type

SX.	frameless screen filler for 120-degree applications

Step 3. Application

A	1/4″ glass
B	3/8″ glass

Prices for Steps 1-3.

GNSX.	**A**	$13
	B	$13

Step 4. Trim Finish

91	white	+$0
G1	graphite	+$0
MS	metallic silver	+$0

Gallery Panel, Leg-Attached GNSTA.

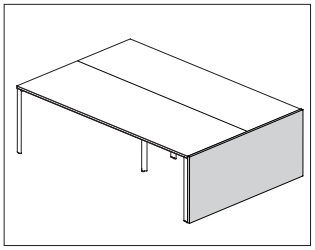

Product Information

Description

This gallery panel attaches to an Engage desk end leg. It has a laminate surface with thermoplastic edge, laminate surface with a thermoplastic backed plywood edge, or veneer surface and edge. Attachment hardware included.

Notes

Top of 29″-high panel aligns with top of a primary surface; top of 42″- and 46″-high panels align with top of a desk up or modesty screen.

All gallery panels are nonhanded. 24″-, 30″-, and 36″-wide panels will work on both right-hand and left-hand single desk end legs.

Grain/pattern direction is vertical for veneer, wood grain laminates, and directional laminates.

Wood grain and directional laminates are available only in 24″-60″ widths.

Dimensions

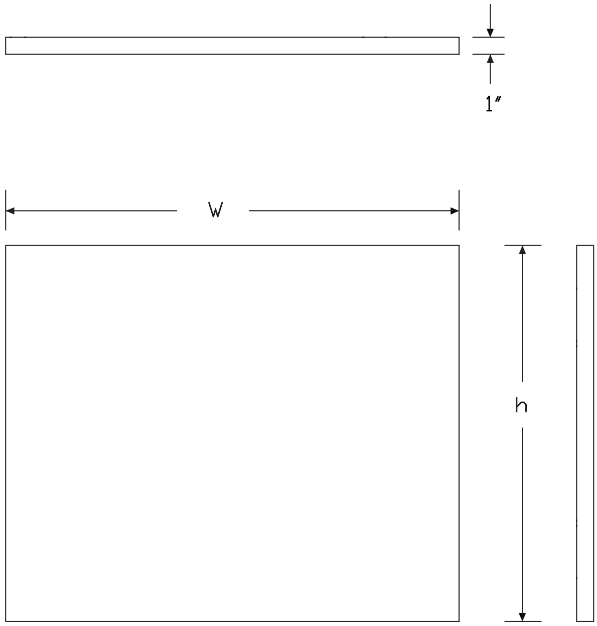

Specification Information

Step 1.

GN

Step 2. Type

ST gallery panel

Step 3. Configuration

A. leg-attached

Step 4. Height

29 29″ high
42 42″ high
46 46″ high

Step 5. Width

24 24″ wide
30 30″ wide
36 36″ wide
48 48″ wide
60 60″ wide
72 72″ wide

Step 6. Surface Material

L laminate top/thermoplastic edge
W veneer
U laminate top/universal edge

Prices for Steps 1-6.

		L	W	U
GNSTA. 29	**24**	$238	521	238
	30	$262	574	262
	36	$285	624	285
	48	$371	815	371
	60	$459	1008	459
	72	$548	1203	548
42	**24**	$280	614	280
	30	$300	659	300
	36	$331	725	331
	48	$447	979	447
	60	$553	1213	553
	72	$660	1447	660

46	**24**	$288	630	288
	30	$310	682	310
	36	$354	777	354
	48	$466	1022	466
	60	$580	1273	580
	72	$691	1519	691

Step 7. Surface Finish

For 24" wide (24), 30" wide (30), 36" wide (36), 48" wide (48), or 60" wide (60) with laminate top/thermoplastic edge (L), or laminate top/universal edge (U)

38	twilight	+$0
39	desert	+$0
76	light brown walnut	+$0
91	white	+$0
98	studio white	+$0
8Q	folkstone grey	+$0
CL	cool grey neutral	+$0
HF	inner tone light	+$0
HM	natural maple	+$0
HP	light anigre	+$0
HT	inner tone	+$0
HX	aged cherry	+$0
HY	walnut on cherry	+$0
LA	light ash	+$0
LBA	clear on ash	+$0
LBR	phantom ecru	+$0
LBS	phantom cocoa	+$0
LBU	medium matte walnut	+$0
LBV	warm grey teak	+$0
LBB	oak on ash	+$0
LBC	walnut on ash	+$0
LBD	dark brown walnut	+$0
LBE	medium red walnut	+$0
LBF	neutral twill	+$0
LBG	sarum twill	+$0
LBH	earthen twill	+$0
LBJ	graphite twill	+$0
LBK	pewter mesh	+$0
LBL	steel mesh	+$0
LBM	crisp linen	+$0
LBN	classic linen	+$0
LBP	casual linen	+$0
LBQ	white twill	+$0
LU	soft white	+$0
WL	sandstone	+$0
WN	warm grey neutral	+$0

Wood Veneer

For veneer (W)

2U	light brown walnut	+$55
40	dark brown walnut	+$55
ET	clear on ash	+$55
EU	oak on ash	+$55
EV	walnut on ash	+$55

Solid-Color Laminate Top/Thermoplastic Edge

For 72" wide (72) with laminate top/thermoplastic edge (L), or laminate top/universal edge (U)

8Q	folkstone grey	+$0
91	white	+$0
98	studio white	+$0
MT	medium tone	+$0
WL	sandstone	+$0
WN	warm grey neutral	+$0

Step 8. Bracket Finish

91	white	+$0
G1	graphite	+$0
MS	metallic silver	+$0

Gallery Panel, Leg-Attached

continued

Step 9. Edge Finish

For 24" wide (24), 30" wide (30), 36" wide (36), 48" wide (48), 60" wide (60), or 72" wide (72) with laminate top/thermoplastic edge (L)

76	light brown walnut	+$0
8Q	folkstone grey	+$0
91	white	+$0
98	studio white	+$0
CL	cool grey neutral	+$0
HF	inner tone light	+$0
HM	natural maple	+$0
HP	light anigre	+$0
HT	inner tone	+$0
HX	aged cherry	+$0
HY	walnut on cherry	+$0
LA	light ash	+$0
LBA	clear on ash	+$0
LBR	phantom ecru	+$0
LBS	phantom cocoa	+$0
LBU	medium matte walnut	+$0
LBV	warm grey teak	+$0
LBB	oak on ash	+$0
LBC	walnut on ash	+$0
LBD	dark brown walnut	+$0
LBE	medium red walnut	+$0
LBF	neutral twill	+$0
LBG	sarum twill	+$0
LBH	earthen twill	+$0
LBJ	graphite twill	+$0
LBK	pewter mesh	+$0
LBL	steel mesh	+$0
LBM	crisp linen	+$0
LBN	classic linen	+$0
LBP	casual linen	+$0
LBQ	white twill	+$0
LU	soft white	+$0
WL	sandstone	+$0
WN	warm grey neutral	+$0

For laminate top/universal edge (U)

PLY	plywood edge A	+$50

Pari Screen, End of Run GNSFXT

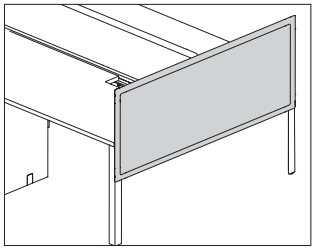

Product Information

Description

This tackable frameless fabric screen attaches to the outside of a Layout Studio® double end leg and provides boundary above and slightly below a surface at the end of a bench or table. Attachment hardware included.

Notes

Screens attach to Layout Studio infrastructure with included hardware; no additional attaching hardware is required.

Screen width must match the depth of leg next to which it will be placed.

All fabric is railroaded.

Screen accepts Customer's Own Material (COM). Yardage is estimated for nondirectional 54"-wide fabrics.

Width—Yardage

48—1.75

60—2.10

For information on multiple quantities or directional fabrics, contact COM Department. See Order Information in Appendices.

Dimensions

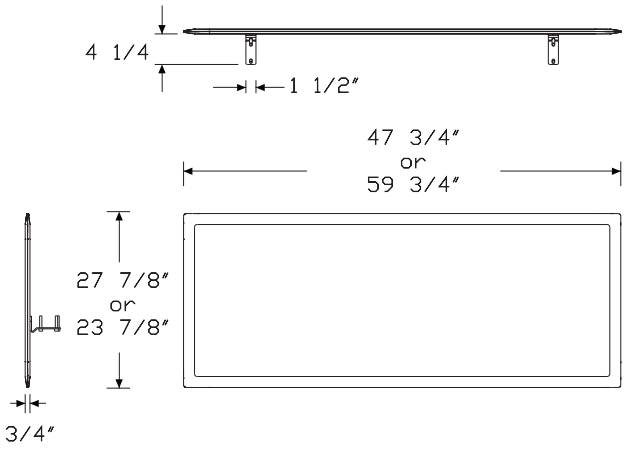

Specification Information

Step 1.

GNSFXT. A

Step 2. Height

42	42" high	A
46	46" high	A

Step 3. Width

48	48" wide	A
60	60" wide	A

Prices for Steps 1-3.

		48	**60**
GNSFXT.	**42**	$641	714
	46	$705	786

Step 4. Bracket Finish

91	white	A	+$0
G1	graphite	A	+$0
MS	metallic silver	A	+$0

Step 5. Surface Finish

Price Category C	+$86
Price Category 1	+$0
Price Category 2	+$15
Price Category 3	+$34
Price Category 4	+$58
Price Category E	+$131

Pari Screen, Delineation GNSPXP

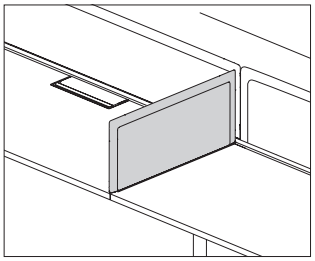

Product Information

Description

This tackable fabric screen provides boundary between workers seated side-by-side, and attaches to a squared-edge Layout Studio® surface.

Notes

All fabric is railroaded.

For screen attachment in middle of run, use either left-hand bracket (GNSD.PNxxEL) or right-hand bracket (GNSD.PNxxER), ordered separately.

Screen accepts Customer's Own Material (COM). Yardage is estimated for nondirectional 54"-wide fabrics.

Width—Yardage

24—0.92

30—1.10

For information on multiple quantities or directional fabrics, contact COM Department. See Order Information in Appendices.

Dimensions

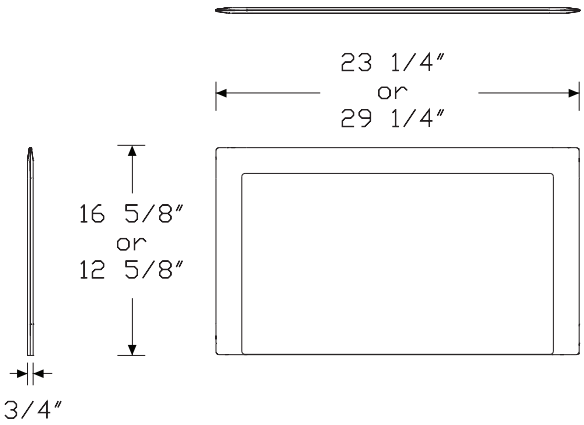

Specification Information

Step 1.

GNSPXP. A

Step 2. Height

42	42" high A
46	46" high A

Step 3. Width

24	24" wide A
30	30" wide A

Step 4. Location

EL	end-of-run, left-hand A
ER	end-of-run, right-hand A

Prices for Steps 1-4.

			EL	ER
GNSPXP.	**42**	**24**	$478	478
		30	$493	493
	46	**24**	$503	503
		30	$522	522

Step 5. Bracket Finish

MS	metallic silver A	+$0

Step 6. Surface Finish

Price Category C	+$48
Price Category 1	+$0
Price Category 2	+$8
Price Category 3	+$19
Price Category 4	+$32
Price Category E	+$0

Flat Edge Screen, Delineation GNSPXS

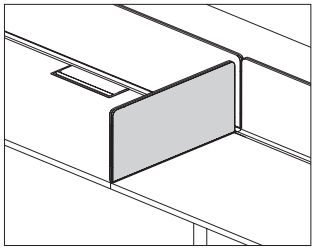

Product Information

Description

This tackable fabric screen provides boundary between workers seated side-by-side, and attaches to a squared-edge Layout Studio® surface.

Notes

All fabric is railroaded.

For screen attachment in middle of run, use either left-hand bracket (GNSD.SNxxEL) or right-hand bracket (GNSD.SNxxER), ordered separately.

Screen accepts Customer's Own Material (COM). Yardage is estimated for nondirectional 54"-wide fabrics.

Width—Yardage

24—0.92

30—1.10

For information on multiple quantities or directional fabrics, contact COM Department. See Order Information in Appendices.

Dimensions

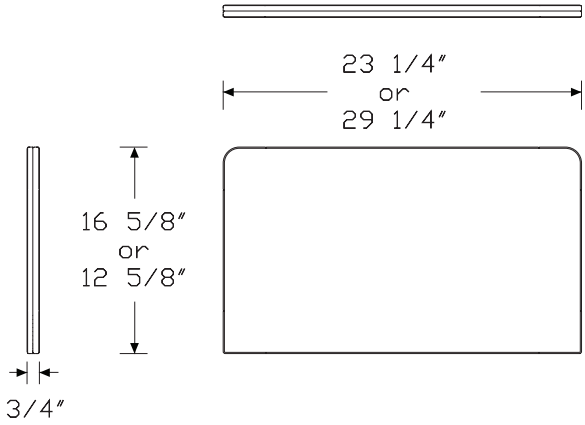

Specification Information

Step 1.

GNSPXS. A

Step 2. Height

42 42" high A

46 46" high A

Step 3. Width

24 24" wide A

30 30" wide A

Step 4. Location

EL end-of-run, left-hand A

ER end-of-run, right-hand A

Prices for Steps 1-4.

			EL	ER
GNSPXS.	**42**	**24**	$306	306
		30	$332	332
	46	**24**	$332	332
		30	$361	361

Step 5. Bracket Finish

MS	metallic silver A	+$0

Step 6. Surface Finish

Price Category 1	+$0
Price Category 2	+$6
Price Category 3	+$10
Price Category 4	+$21
Price Category E	+$0

Generic Beam Clamp GNSG.

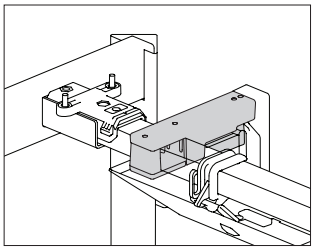

Product Information

Description

These beam clamps are used to attach a single-sided cable management tray.

Notes

If screens are being used, generic beam clamps are not required.

Specified as a single clamp. Order 2 for each cable management tray.

Dimensions

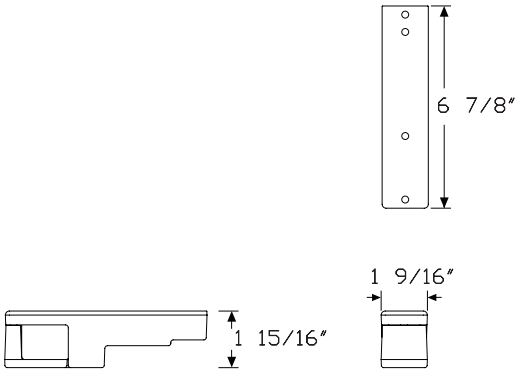

Specification Information

Step 1.

GNSG.	$36

Suspended End Cubby Hardware Kit LSH.

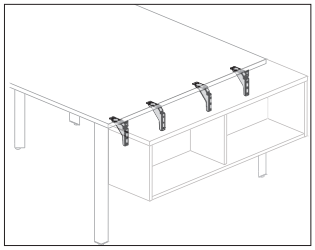

Product Information

Description

This hardware kit attaches a suspended end cubby to the outside of a Layout Studio® double desk end leg.

Notes

Order suspended end cubby (L2ES.B) separately.

Dimensions

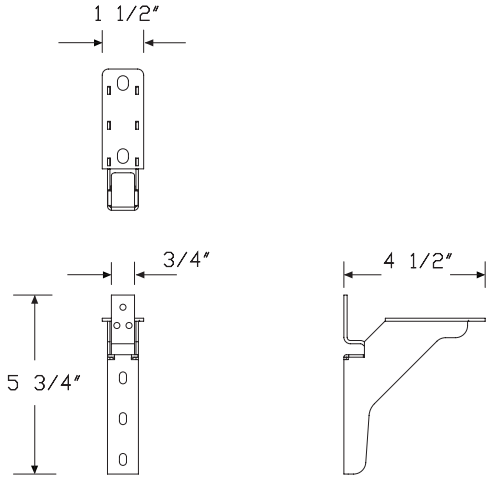

Specification Information

Step 1.

LSH. A

Step 2. Application

B	suspended below surface A	

Prices for Steps 1-2.

LSH.	**B**	$358

Step 3. Finish

Metallic Paint

MS	metallic silver A	+$0

Sand Texture Paint

91	white A	+$0
BK	black A	+$0
G1	graphite A	+$0

Storage Attachment Kit, End Leg L2SL.

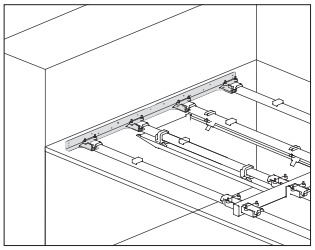

Product Information

Description

This hardware kit attaches Layout Studio® beams to a Tu® Wood freestanding storage unit to allow the storage unit to replace a Layout Studio double end leg. The kit is available for use with a 48"-wide or a 60"-wide freestanding storage case. Finish is cool grey neutral.

Notes

To replace a Layout Studio double leg with a storage unit, order a Tu Wood end-of-run cabinet (L2ER.) separately.

Specify storage base option to match base option on storage unit.

Dimensions

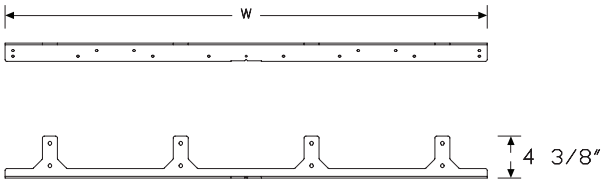

Specification Information

Step 1.

L2SL. A

Step 2. Depth

48	48" double end leg A	
60	60" double end leg A	

Prices for Steps 1-2.

L2SL.	**48**	$326
	60	$351

Step 3. Storage Base Option

1	base A	+$0
3	base with fronts to floor A	+$0
5	foot A	+$0
9	c-foot A	+$0

Index by Product Name

Layout Studio®	
Access Door	page(s) 103, 26
Beams, 120°	102
Beams, Meeting End	101, 21
Beams, Rectangular Primary	98, 20
Beams, Rectangular Return	99
Block Connector, 4-Circuit	107, 30
Cable Management Clips, Double Tray	115, 39
Closed Leg, Desk End, Double	94, 16
Closed Leg, Desk End, Single	92
Closed Leg, Desk End, Single, Performance Rail	14
Closed Leg, Standing End, Double	96, 18
Corner Post	162
Data Module	114, 38
Duplex Receptacle, 4-Circuit	110, 33
End Cap, Performance Rail	23
End Cap, Performance Rail, Package	24
Engage Leg, Asymmetrical Desk End, Double	85, 8
Engage Leg, Back-to-Back Bracing Leg	88
Engage Leg, Back-to-Back Bracing Leg, Performance Rail	10
Engage Leg, Corner Leg	87
Engage Leg, Desk End, Double	83, 6
Engage Leg, Desk End, Double, Meeting End	86, 9
Engage Leg, Desk End, Single	82
Engage Leg, Desk End, Single, Performance Rail	5
Engage Leg, Intermediate Desk	84
Engage Leg, Intermediate Desk, Performance Rail	7
Engage Leg, Intermediate Standing	90, 12
Engage Leg, Standing Back-to-Back Bracing Leg	91, 13
Engage Leg, Standing End, Double	89, 11
Flat Edge Screen, Delineation	169
Flat Edge Screen, Delineation, Performance Rail	66
Flat Edge Screen, Desk Up	139
Flat Edge Screen, Desk Up, Performance Rail	52
Flat Edge Screen, End of Run	64
Flat Edge Screen, Modesty	150
Floor Power Entry Cover	116, 40
Framed Screen, Delineation	159
Framed Screen, Desk Up	144
Framed Screen, Modesty	155
Frameless Glass Screen Filler Kit	163
Gallery Panel, Leg-Attached	164, 60
Generic Beam Clamp	170
Glass Screen, Desk Up, Frameless	146
Glass Screen, Desk Up, Frameless, Performance Rail	53
Hardware Pack, Fixed Surfaces	133, 48
Hardware Pack, Quick Release Attachment	134, 49
Hardware Pack - Sliding - Rectangular Primary	135, 50
Hardware Pack, Sliding, Rectangular Primary Surface	136
Harness Cover	109, 32
Individual Cubby	69
Junction Block, 4-Circuit	105, 28
Junction Block Attachment Bracket	104
Junction Block Attachment Bracket, Performance Rail	27
Junction Block-to-Junction Block Jumper	108, 31
Laminate Suspended End Cubby	74
Layout Studio® Laminate Screen, Desk Up	141
Layout Studio® Laminate Screen, Desk Up, Performance Rail	55
Layout Studio® Laminate Screen, Modesty	152
Meeting End, Rectangular	128, 46
Pari Screen, Delineation	168
Pari Screen, Delineation, Performance Rail	65
Pari Screen, Desk Up	137
Pari Screen, Desk Up, Performance Rail	51
Pari Screen, End of Run	167, 63
Pari Screen, Modesty	148
Performance Rail	22
Personal Side Screen, Delineation	157, 58
Power Entry, 4-Circuit	111, 34
Power Entry, 4-Circuit, New York City	112, 35
Primary Work Surface, 120°	130
Primary Work Surface, Rectangular	118
Primary Worksurface, Rectangular, Performance Rail	42
Project Table, Rectangular	125
Return Leg Beam Replacement Kit	100
Return Work Surface, Rectangular	123
Screen Bracket, Delineation, Pari or Flat Edge	67
Screen Brackets	160
Screen Connectors	161
Screen - Modesty - Metal, Performance Rail-Attached	57
Shared Cubby	71
Shared Cubby Insert	81
Stanchion Kit, Performance Rail	77
Storage Attachment Kit, End Leg	172, 80
Suspended End Cubby Hardware Kit	171, 79
Trim Strip, Performance Rail Center Channel	25
Umbilical Riser, Fixed Height	117, 41
Wire Management Tray	113, 37
Wire Management Tray, Single, Performance Rail	36

Index by Product Number

GN1351	Power Entry, 4-Circuit	page(s) 111, 34
GN1352	Power Entry, 4-Circuit, New York City	112, 35
GN1353	Junction Block-to-Junction Block Jumper	108, 31
GN1354	Block Connector, 4-Circuit	107, 30
GN1355	Duplex Receptacle, 4-Circuit	110, 33
GN1358	Junction Block, 4-Circuit	105, 28
GNBA.	Beams, Rectangular Return	99
GNBB.		
GNBC.		
GNBD.	Return Leg Beam Replacement Kit	100
GNBF.	Beams, 120°	102
GNBG.		
GNBM.	Beams, Meeting End	101, 21
GNBR.	Beams, Rectangular Primary	98, 20
GNCFEL	Closed Leg, Desk End, Single	92
GNCFEL	Closed Leg, Desk End, Single, Performance Rail	14
GNCFEN	Closed Leg, Desk End, Double	94, 16
GNCFER	Closed Leg, Desk End, Single	92
GNCFER	Closed Leg, Desk End, Single, Performance Rail	14
GNCSEN	Closed Leg, Standing End, Double	96, 18
GNHDA.	Hardware Pack, Quick Release Attachment	134, 49
GNHDF.	Hardware Pack, Fixed Surfaces	133, 48
GNHPA.	Hardware Pack, Quick Release Attachment	134, 49
GNHPF.	Hardware Pack, Fixed Surfaces	133, 48
GNHPS.	Hardware Pack, Sliding, Rectangular Primary Surface	136
GNHRS.	Hardware Pack - Sliding - Rectangular Primary	135, 50
GNHSF.	Hardware Pack, Fixed Surfaces	133, 48
GNLFAL	Engage Leg, Asymmetrical Desk End, Double	85, 8
GNLFAR		
GNLFBN	Engage Leg, Back-to-Back Bracing Leg	88
GNLFBN	Engage Leg, Back-to-Back Bracing Leg, Performance Rail	10
GNLFCN	Engage Leg, Corner Leg	87
GNLFEL	Engage Leg, Desk End, Single	82
GNLFEL	Engage Leg, Desk End, Single, Performance Rail	5
GNLFEN	Engage Leg, Desk End, Double	83, 6
GNLFER	Engage Leg, Desk End, Single	82
GNLFER	Engage Leg, Desk End, Single, Performance Rail	5
GNLFPN	Engage Leg, Desk End, Double, Meeting End	86, 9
GNLFSN	Engage Leg, Intermediate Desk	84
GNLFSN	Engage Leg, Intermediate Desk, Performance Rail	7
GNLSBN	Engage Leg, Standing Back-to-Back Bracing Leg	91, 13
GNLSEN	Engage Leg, Standing End, Double	89, 11
GNLSSN	Engage Leg, Intermediate Standing	90, 12
GNMRF.	Screen - Modesty - Metal, Performance Rail-Attached	57
GNPA.	Junction Block Attachment Bracket	104
GNPA.	Junction Block Attachment Bracket, Performance Rail	27
GNPC.	Floor Power Entry Cover	116, 40
GNPD.	Access Door	103, 26
GNPH.	Harness Cover	109, 32
GNRC.	End Cap, Performance Rail	23
GNRC.	End Cap, Performance Rail, Package	24
GNRD.	Performance Rail	22
GNRS.		
GNRT.	Trim Strip, Performance Rail Center Channel	25
GNSA.	Screen Brackets	160
GNSB.		
GNSC.		
GNSDFT	Framed Screen, Desk Up	144
GNSDL.	Layout Studio® Laminate Screen, Desk Up	141
GNSDNT	Framed Screen, Desk Up	144
GNSDRG	Glass Screen, Desk Up, Frameless, Performance Rail	53
GNSDRL	Layout Studio® Laminate Screen, Desk Up, Performance Rail	55
GNSDRS	Flat Edge Screen, Desk Up, Performance Rail	52
GNSDRT	Pari Screen, Desk Up, Performance Rail	51
GNSDRU	Layout Studio® Laminate Screen, Desk Up, Performance Rail	55
GNSD.	Screen Bracket, Delineation, Pari or Flat Edge	67
GNSDTT	Framed Screen, Desk Up	144
GNSDU.	Layout Studio® Laminate Screen, Desk Up	141
GNSDXG	Glass Screen, Desk Up, Frameless	146
GNSDXS	Flat Edge Screen, Desk Up	139
GNSDXT	Pari Screen, Desk Up	137
GNSE.	Screen Connectors	161
GNSFXS	Flat Edge Screen, End of Run	64
GNSFXT	Pari Screen, End of Run	167, 63
GNSG.	Generic Beam Clamp	170
GNSH.	Screen Connectors	161
GNSJ.		
GNSML.	Layout Studio® Laminate Screen, Modesty	152
GNSMNT	Framed Screen, Modesty	155
GNSMU.	Layout Studio® Laminate Screen, Modesty	152
GNSMXS	Flat Edge Screen, Modesty	150
GNSMXT	Pari Screen, Modesty	148
GNSND.	Corner Post	162
GNSNM.		
GNSPNT	Framed Screen, Delineation	159
GNSPXP	Pari Screen, Delineation	168
GNSPXP	Pari Screen, Delineation, Performance Rail	65
GNSPXS	Flat Edge Screen, Delineation	169
GNSPXS	Flat Edge Screen, Delineation, Performance Rail	66
GNSPXT	Personal Side Screen, Delineation	157, 58
GNSTA.	Gallery Panel, Leg-Attached	164, 60
GNSX.	Frameless Glass Screen Filler Kit	163

GNTAD.	Primary Work Surface, 120°	130
GNTAF.		
GNTAG.		
GNTAN.		
GNTDG.	Meeting End, Rectangular	128, 46
GNTDN.		
GNTPA.	Project Table, Rectangular	125
GNTPN.		
GNTRD.	Primary Work Surface, Rectangular	118
GNTRF.		
GNTRG.		
GNTRN.		
GNTRR.	Primary Worksurface, Rectangular, Performance Rail	42
GNTSN.	Return Work Surface, Rectangular	123
GNWC.	Cable Management Clips, Double Tray	115, 39
GNWD.	Wire Management Tray	113, 37
GNWF.	Umbilical Riser, Fixed Height	117, 41
GNWG.		
GNWM.	Data Module	114, 38
GNWS.	Wire Management Tray	113, 37
GNWS.	Wire Management Tray, Single, Performance Rail	36
L2EC.	Individual Cubby	69
L2ES.	Laminate Suspended End Cubby	74
L2EY.	Shared Cubby	71
L2SL.	Storage Attachment Kit, End Leg	172, 80
L2SS.	Stanchion Kit, Performance Rail	77
LLCM.	Shared Cubby Insert	81
LSH.	Suspended End Cubby Hardware Kit	171, 79

20-Day or Less/Assigned Lead-Time Order Information

20-Day or Less and Assigned Lead-Time Programs

20-day or less and assigned lead-time products are designed for established Herman Miller dealers with pre-approved credit.

Products are distributed from multiple manufacturing facilities across the United States. All products and options not designated by an Assigned Lead-Time icon [A] will ship in 20 business days or less after being acknowledged by Herman Miller. Products and options designated by an [A] are on the assigned lead-time program and will ship in 20 days, less than 20 days, or more than 20 days from order acknowledgement.

Ordering Procedure

Please place orders through Order Manager. If this is not available to you, place orders through mail or fax. Verbal purchase orders will not be accepted.

Order Entry fax number for Passage®, 5000 Series, and Meridian® Filing and Storage: (616) 846 9236.

Order Entry fax number for all other products: (616) 654 3085.

For more information, contact your Customer Care representative at: (866) 854 3048 EXT 3400.

Shipments and Delivery

Per Herman Miller Terms and Conditions.

Changes and Cancellation

Per Herman Miller Terms and Conditions.

Stain-to-Match Program

Program Overview

The Stain-to-Match program gives you the option of using veneer finishes that are not listed in the standard offering. The program allows Herman Miller to match a customer's existing recut or natural veneer, or create a new finish that is unique to an installation.

Specific information on approval, ordering, pricing, and warranty for the Stain-to-Match program is listed below. Questions and requests for assistance may be directed to Herman Miller Options at:

(800) 654 3910

Stain-to-Match Process

1. Fill out the Options Stain-to-Match Request Form and send along with a color sample (2" x 3" minimum) to the Herman Miller Options Applications Team at the address provided on the form. The form can be found on Omni.
2. Within 7-10 working days, Herman Miller Options will send a sample of the color-matched stain on Herman Miller veneer to the requester for the customer's signed approval.
3. If the sample meets the customer 's approval, sign the reverse side of the sample, scan and email the approval to:
   options@hermanmiller.com.
4. After the stain has been approved, a formal quotation with special number and pricing can be provided, or the product can be specified through the Vary Easy program, if available. Work with the Options team on final product needs and how to specify.
5. A purchase order can then be placed.

Stain-to-Match Warranty

Herman Miller warrants its products to be free from defects in craftsmanship from the date of delivery for the applicable warranty period. Herman Miller is responsible for the physical properties of the veneers available through the Stain-to-Match program, which include:

STA: Stain-to-Match on Recut Ash
STB: Stain-to-Match on Beech
STC: Stain-to-Match on Cherry
STD: Stain-to-Match on Oak
STK: Stain-to-Match on Reltech Anigre (Geiger)
STM: Stain-to-Match on Recut Mahogany
STP: Stain-to-Match on Maple
STU: Stain-to-Match on Walnut (Geiger)

See your specification tool for product specific finish offering limitations.

Customer's Own Material Order Information — Workspaces

Customer's Own Material

Program Overview

The Customer's Own Material (COM) program gives you the option of using textiles other than those listed. Herman Miller will test textiles for application to Herman Miller products and will process orders for those with approved COM textiles only. COM textiles are on assigned lead times.

Omni lists an overview of fabrics that have been tested and indicates whether or not they were approved for application to Herman Miller products.

Specific information on the terms and conditions, testing, approval, and ordering process for COM is listed below. Questions about the COM program and requests for assistance may be directed to your COM representative at:
(616) 654 3400
(866) 854 3048 EXT 6543400

Customer's Own Material Warranty

Herman Miller does not warrant COM textiles. COM textiles are tested for application only; they are not tested for performance. The Herman Miller warranty does apply to the underlying products.

Suppliers of COM textiles are responsible for color consistency within commercial tolerances, UV stability, and resistance to soiling and perspiration.

Customer's Own Material Pricing

COM is a Category 1 fabric. There are no application charges for COM fabrics.

Ordering and payment for COM textile yardage are the responsibility of the customer and the textile supplier.

If desired, Herman Miller will purchase COM textiles directly from True Textiles, C.F. Stinson, Luna Textiles, Maharam, and Momentum Textiles to simplify ordering and shipment. For this service, refer to the Supplier Connection program.

Application Note

Herman Miller does not guarantee that Customer's Own Material (COM) fabric patterns will align across panels/tiles or from one screen to the next. We also do not guarantee that COM fabric designs will be positioned consistently in the same location across several panels, tiles, or screens.

Textile Approval

1. Select a COM textile and a Herman Miller product.
2. If your textile is not listed in Omni, obtain a test number from a COM representative at (616) 654 3400. You can also submit your request within Omni. Please have the following information ready before calling: textile name, number, pattern, and the product you will apply it to.
3. Herman Miller will notify you of approval or disapproval within 4 days from receipt of the test yardage.

Ordering Products with COM

1. Refer to the specific products to determine the yardage required for COM textiles.
2. If your textile is not listed in Omni, call a COM representative at (616) 654 3400 or (866) 854 3048 EXT 6543400. The representative will assign an identification number for your textile (ID#) and will verify yardage requirements for your order.
   Note: Yardage requirements are based on nondirectional, 54"-wide textiles. 66"-wide textiles are needed for application on 60"-wide products. Additional yardage may be needed due to the unique characteristics of a textile.
3. Enter your order on Order Manager in Omni.
4. Upon receipt of your purchase order, Herman Miller will send you a PO acknowledgment.
5. Arrangements must be made for the textiles to be shipped from the supplier to Herman Miller for application to the Herman Miller products. Textiles must be tagged with the assigned identification number and the roll yardage quantity. See Omni for shipping procedures and current shipping addresses or contact a COM representative at (616) 654 3400 or (866) 854 3048 EXT 6543400.

   Products will be scheduled for production when COM textiles are received at Herman Miller. Standard lead times in effect at that time will apply.

   Note: If textiles are to be purchased directly by Herman Miller through the Supplier Connection program, Herman Miller will handle the ordering and shipping process and will schedule your order for production upon receipt of your purchase order (dependent on textile availability). Refer to the Supplier Connection program for more information.

Supplier Connection

Program Overview

The Supplier Connection program is a service offered by Herman Miller to purchase approved COM textiles directly from True Textiles, C.F. Stinson, Luna Textiles, Maharam, and Momentum Textiles. When you select a textile through this program, Herman Miller will facilitate the ordering, scheduling, and shipment of the textile directly with the supplier.

Suppliers included in the Supplier Connection program keep an active inventory of textiles that are pre-approved for application to Herman Miller products. Pre-approval applies only to the suitability of a textile for manufacturing and application to a Herman Miller product. Omni provides an overview of fabrics that have been tested and indicates whether or not they were approved for application to Herman Miller products.

Specific information on the terms and conditions, testing, approval, and ordering process for the Supplier Connection program is listed below. Questions and requests for assistance may be directed to your COM representative at:
(616) 654 3400
(866) 854 3048 EXT 6543400

Supplier Connection Warranty

Textiles purchased by Herman Miller through the Supplier Connection program are COM and are not warranted by Herman Miller. COM textiles are tested for application only; they are not tested for performance. The Herman Miller warranty does apply to the underlying products.

Suppliers of COM textiles are responsible for color consistency within commercial tolerances, UV stability, and resistance to soiling and perspiration.

Supplier Connection Pricing

Textiles purchased by Herman Miller through the Supplier Connection program are COM. COM is a Category 1 fabric. There are no application charges for COM fabrics.

Payment for textiles purchased by Herman Miller through the Supplier Connection program is the responsibility of the customer or dealer. Herman Miller will invoice the order at the supplier's prices published at the time of the order.

Textile Approval

1. Refer to Omni to identify the approval status of the textile. If your textile is not listed, contact the COM Department to request testing for application to Herman Miller products.
2. Herman Miller will notify you of approval or disapproval in approximately 4 days from receipt of the test yardage. If the textile is approved, it will be assigned a COM identification number.

Ordering Products with Supplier Connection COM

1. Identify and include the following information on your purchase order:
   - Product number and option
   - Herman Miller's COM identification number
2. Enter your order on Order Manager in Omni.
3. Upon receipt of the purchase order, Herman Miller will process your order and send you a PO acknowledgment. Herman Miller will determine the yardage required to produce your product and will order and schedule for delivery the required textile. Standard lead times in effect at the time the textile is allocated at the supplier will apply to products ordered through this program.

Proprietary Textiles Application Chart — Workspaces

• *Available*

A *Assigned lead-time textile.*

See page 3 for exception notes.

	Action Office® Panels/Connectors	Action Office/Ethospace® B-Style Storage	Action Office B-Style Tackboards	Action Office/Ethospace E-Style Storage	Ethospace Tiles/Connectors	Ethospace Work Surface-Attached Screens	Ethospace/Canvas Office Landscape® Privacy Doors	Canvas Tiles/Extended Width Tiles	Canvas B-/E-Style Storage	Canvas Standing Screen and Team Wall Infill	Canvas Tackboards	Canvas Vista™ Movable Insert and Display Unit	Layout Studio® Framed Screen	Locale® Display Tackboard	Locale Freestanding Screen and Workbase Screen	Locale L-Desk/D-Desk Screens	Overlay™ Performance Wall Cladding	Pari™ Screens/Flat Edge Screens	Prospect™ Exterior Acoustic Pad	Public Office Landscape® Screen/Desk Top Divider	Renew™ Link Screens	Resolve® Boundary Screens/Flags	Resolve Display Screens	Resolve Rolling Screens/Canopies	Exclave® Tackable Boards and Stowage Tackable Backdrop	Exclave Video-Friendly Tackable Boards and Stowage Tackable Backdrop	Intersect® Screens	Personal Side Screen	Tu® Wood Storage Cubby Tackboard	Seating
Price Category 1																														
COM Customer's Own Material A	1	1	1	1	1		1	1	1	1	•		1	1	1			1		1	1	1					1	1		1
8A_ _ Bubbletack™																							•							
2V_ _ Chain	•	•	•	•	•		•	22	•	•	•	•	•	•	•		•	•		•	•						•		•	
8T_ _ Crossing (85_ _)	2	2	2	•	•		•	•	2	•	•		•	•	•	•	•	•	•	•	•				•	8	•		•	18
3DE_ _ Dex	2	2	2	•	•		•	•	2	•	•		•	•	•	•	•	•		•	•				•		•	•	•	•
95_ _ Gem	2	2	2	•	•		•	•	2	•	•		•	•			•										•	•	•	•
2I_ _ Grasscloth	•	•	•	•	•		•	•	•	•	•	•		•	•	•	•	•	•	•	•						•	•	•	
1MN_ _ Monologue	2	2	2	•	•		•	•	2	•	•	•	•	•	•	•	•	•		•	•						•	•	•	•
8B_ _ Multiscrim™						•																•		•						
5T_ _ Resonance	•	•	•	•	•		•	•	•	•	•	•	•	•			•										•	•	•	
8C_ _ Scrim Trim																								•						
2M_ _ Silkworm	•	•	•	•	•		•	•	•	•	•	•	•	•			•										•	•	•	
22F_ _ Slant	6		•		•		•	•		•	•	•	•	•			•										•		•	
235_ _ Tailored A	•	•		•	•		•	8	•	•	•	•		•			•										•		•	•
1WS_ _ Whisper	2	2	2	•	•		•	•	2	•	•	•	•	•	•	•	•	•	•	•	•						•	•		•
Price Category 2																														
3AR_ _ Aristo	2	2	2	•	•		•	•	2	•	•		•	•	•	•	•	•		•	•				•		•	•	•	•
1CD_ _ Code	•	•	•	•	•		•	•	•	•	•	•	•	•			•								•		•			
51_ _ Cord	•	•	•	•	•		•	•	•	•	•	•	•	•			•										•		•	
92_ _ Crepe	2	•	•	•	•		•	•	•	•	•	•	•	•			•		•						•	8	•	•		•
3EP_ _ Epic	2	2	2	•	•		•	•	2	•	•		•	•	•	•	•	•		•	•				•		•	•	•	•
22Q_ _ Fish Net		2	2	•	•		•	•	2	•		•	•				•	•	•		•									•
57_ _ Frost	•	•	•	•	•		•	•	•	•	•	•	•	•	•		•	•		•	•						•	•	•	
84_ _ Grosgrain	4	•	•	•	•		•	8	•	•		•	•	19			•										•	19	•	
4N_ _ Horizon	2	2	2	•	•		•	•	•	•	•	•	•	•			•										•	•	•	
1LM_ _ Loom	2	2	2	•			•	•	•		•		•	•	•		•	•		•	•				•		•			•
1HA_ _ Medley	2	2	2	•	•		•	•	•	•	•	•	•	•	•	•	•	•	•	•	•				•	8	•	•		•
3A_ _ Moiré		2	2	•	•		•	22	2	•	•	•	•	•	•		•	•		•	•								•	•
1RV_ _ Rivet	2	2	2	•	•		•	•	2	•	•	•			•		•	•	•	•	•							•	•	•
3SL_ _ Sequel		2							2																					•
8R_ _ Twist (5S_ _)	5	2	2	•	•		•	•	2	•	•	•	•	•	•	•	•	•	•	•	•						•	•	•	18
22T_ _ Well Suited		2		•	•			•	2	•		•					•													•

continued on next page

Proprietary Textiles Application Chart — Workspaces

continued

	Action Office® Panels/Connectors	Action Office/Ethospace® B-Style Storage	Action Office B-Style Tackboards	Action Office/Ethospace E-Style Storage	Ethospace Tiles/Connectors	Ethospace Work Surface-Attached Screens	Ethospace/Canvas Office Landscape® Privacy Doors	Canvas Tiles/Extended Width Tiles	Canvas B-/E-Style Storage	Canvas Standing Screen and Team Wall Infill	Canvas Tackboards	Canvas Vista™ Movable Insert and Display Unit	Layout Studio® Framed Screen	Locale® Display Tackboard	Locale Freestanding Screen and Workbase Screen	Locale L-Desk/D-Desk Screens	Overlay™ Performance Wall Cladding	Pari™ Screens/Flat Edge Screens	Prospect™ Exterior Acoustic Pad	Public Office Landscape® Screen/Desk Top Divider	Renew™ Link Screens	Resolve® Boundary Screens/Flags	Resolve Display Screens	Resolve Rolling Screens/Canopies	Exclave® Tackable Boards and Stowage Tackable Backdrop	Exclave Video-Friendly Tackable Boards and Stowage Tackable Backdrop	Intersect® Screens	Personal Side Screen	Tu® Wood Storge Cubby Tackboard	Seating
Price Category 3																														
70_ _ Bento	2	2	2	•				•	2	•	•	•		•	•		•	•		•	•						•		•	•
1FB _ Connection	•	•	•	•	•		•	•	•	•	•	•	•	•	•					•							•	•	•	
1FC _ Current	•	•	•	•	•		•	•	•	•	•	•	•	•	•					•							•	•	•	
8Z_ _ Glaze	•	•	•	•	•		•	•	•	•	•	•	•	•			•										•	•	•	
47_ _ Ground Cloth®	•	•	•	•	•		•	•	•	•	•	•	•	•	•		•	•		•	•	14			•	8	•	•	•	
5D_ _ Kira 2	2	2	2	•	•		•	•	2	•	•	•	•	•	•		•	•		•	•	14					•	•	•	
22R_ _ Pins and Needles	2	2		•	•		•	•	2	•	•	•	•	•			•										•			•
8L_ _ Savannah	•	20	•	•	•		•	•	•	•	•	•	•	•			•		•			14							•	
8W_ _ Strands	•	•	•	•	•		•	•	•	•	•		•	•	•		•	•		•	•						•	•	•	
22V_ _ String Plaid	2	2	2	•	•		•	•	2	•	•	•	•	•	•		•	•		•	•						•			•
Price Category 4																														
2X_ _ Glisten	•	•	•	•	•		•	•	•	•	•	•	•	•			•				•						•		•	
22L_ _ Loft [A]		2	2	•	•		•	•	2	•	•	•	•	•	•	•	•	•	•	•	•				•	8	•	•	•	
6S_ _ Quilty	2	2	2	•	•		•	•	2				•	•			•										•	•		•
Price Category 5																														
14A_ _Hopsak	2	2	2	•	•			•	2	•	•	•	•	•			•								•		•		•	•
Price Category 6																														
No fabrics available at this time.																														

1 *Refer to price book appendices and Omni for COM information.*

2 *Available on all products except 54" and 60" wide.*

4 *Not available on Action Office (AO®) acoustical panels.*

5 *(8R_ _), (8T_ _), (85_ _), and (5S_ _) not available on AO acoustical panels and not available on 54"- or 60"-wide products.*

6 *Not available on Action Office (AO®) connectors, cable management, and spacers.*

8 *Available in select colors. See the "Proprietary Textile Colors — Workspaces" appendix.*

14 *Not available on Resolve flags.*

18 *Available on seating products in select colors. See the "Proprietary Textile Colors — Seating" appendix.*

19 *Not available in Grosgrain (84_ _) fabric colors 8401, 8405, and 8413.*

20 *Available only on Ethospace B-Style.*

22 *Not available as railroaded application option for* Chain *(2V00) and* Moiré *(3A00) on Canvas Extended Width Tiles.*

Application Note: Herman Miller cannot guarantee material/pattern alignment in adjacent products. For example, a fabric's pattern may not align from one screen to the next, or from one panel to the next.

Price Category 1

Customer's Own Material

See Order Information in Appendices.
Assigned lead-time textile. A

Bubbletack™

100% polyester

8A01	Seashell White
8A02	Pearl Grey
8A19	Spa Blue
8A24	Sable Grey
8A27	Summer White
8A28	Moth Grey
8A30	Blue Grey
8A31	Dusty Bronze
8A32	Slate Blue
8A35	Studio White
8A36	Blush Grey
8A37	Shale
8A38	Slate
8A39	Eggnog
8A40	Persimmon
8A41	Bud

Chain

66" wide
100% recycled polyester

2V01	Pearl
2V02	Oyster
2V03	Wheat
2V04	Linen
2V05	Wicker
2V06	Bamboo
2V07	Sage
2V08	Spring Wood
2V09	Iceberg

Crossing

54" wide
86% antimony-free polyester
14% polyester

8T03	Wicker *
8T04	Porcelain *
8T05	Warm Grey *
8T06	Sepia
8T07	Pumpkin
8T08	Copper
8T09	Cranberry
8T10	Tomato
8T11	Mulberry
8T12	Plum
8T13	Green Apple
8T14	Loden
8T15	Spruce
8T16	Periwinkle
8T17	Cerulean
8T18	Indigo
8T19	Shale *
8T20	Brownstone
8T21	Bark
8T22	Tin *
8T23	Graphite
8T24	Black

Crossing

For workspaces products only.
54" wide
86% antimony-free polyester
14% polyester

8501	Ivory *
8502	Oyster *

* Colors available on Exclave® Video-friendly Tackable Boards and Stowage Tackable Backdrop

Dex

54" wide
50% recycled polyester
50% polyester

3DE01	Frost
3DE02	Silver Pine
3DE03	Stone
3DE04	Shale
3DE05	Charcoal

Gem

54" wide
100% antimony-free polyester

9502	Tangerine
9503	Red
9507	Twilight
9508	Bayou
9510	Berry Blue
9511	Aqua Green
9512	Green Apple
9514	Black
9515	Slate Grey
9516	Fog

Grasscloth

66" wide
100% recycled polyester

2I01	Silver Birch
2I02	Pampas
2I03	Sedge
2I07	Lea
2I08	Taro
2I09	Steam Grey
2I10	Cayenne
2I11	Bottle Green
2I12	Surf
2I13	Gravel

Monologue

54" wide
56% recycled polyester
44% polyester

1MN01	Linen
1MN02	Alabaster
1MN03	Truffle
1MN04	Folkstone
1MN05	Silver Pine
1MN06	Slate
1MN07	Seed
1MN08	Yellow Oxide
1MN09	Persimmon
1MN10	Tundra
1MN11	Meadow
1MN12	Blue Sky
1MN13	Blue Spruce
1MN14	Deep Sea

Multiscrim™

60" wide
100% polyester

8B01	Seashell White
8B02	Pearl Grey
8B19	Spa Blue
8B24	Sable Grey
8B27	Summer White
8B28	Moth Grey
8B30	Blue Grey
8B31	Dusty Bronze
8B32	Slate Blue
8B35	Studio White
8B36	Blush Grey
8B37	Shale
8B38	Slate
8B39	Eggnog
8B40	Persimmon
8B41	Bud

Price category 1 continued on next page

Price Category 1
continued

Price Category 2

Resonance	
66” wide	
100% polyester	
5T04	Greige
5T05	Porcelain
5T06	Alabaster
5T15	Iris
5T28	Sugar
5T47	Tobacco
5T54	Saltbush
5T57	Seed
5T58	Sepia
5T60	Iceberg
5T65	Red
5T67	Boysenberry
5T68	Pistachio
5T69	Green Apple
5T71	Jade
5T72	Blue Green
5T74	Twilight

Scrim Trim	
61” wide	
82% polyester	
18% spandex	
8C01	Seashell White
8C02	Pearl Grey
8C22	Winter Grey
8C24	Sable Grey

Silkworm	
66” wide	
58% recycled polyester	
42% polyester	
2M01	Cocoon
2M02	Pongee
2M03	Saffron
2M04	Tussah
2M05	Ceylon
2M06	Jasmine
2M07	Shale
2M08	Monsoon

Slant	
66” wide	
51% polyester	
49% recycled polyester	
22F04	Pesto
22F06	Neptune
22F07	Blueberry
22F10	Pumpkin
22F12	Silver Birch
22F13	Bluestone
22F15	Shale

Tailored	
Assigned lead-time textile. A	
54” wide	
56% polyester	
44% recycled polyester	
23501	Studio White *
23502	Sugar
23503	Tomato
23504	Orchid
23505	Boysenberry
23506	Chive
23507	Bluegrass
23508	Cobalt
23509	Cadet
23510	Fog
23511	Graphite
23512	Black
23513	Coffee

* Color not available on Canvas Tiles.

Whisper	
54” wide	
73% recycled polyester	
27% polyester	
1WS01	Sand Dollar
1WS02	Pebble
1WS03	Silver Birch
1WS04	Iceberg
1WS05	Silver Pine
1WS06	Carbon
1WS07	Cumin
1WS08	Adobe
1WS09	Strawberry
1WS10	Blush
1WS11	Eggplant
1WS12	Willow
1WS13	Sea Grass
1WS14	Pool
1WS15	Blueberry

Aristo	
54” wide	
88% recycled polyester	
12% polyester	
Acrylic backing	
3AR01	Forest Moss
3AR02	Light Brindle
3AR03	Mink
3AR04	Copper
3AR05	Adobe
3AR06	Cherry
3AR07	Lilac
3AR08	Green Apple
3AR09	Surf
3AR10	Waterfall
3AR11	Cadet
3AR12	Tin
3AR13	Pewter
3AR14	Grey Brindle
3AR15	Grey Black

Code	
66” wide	
100% Repreve recycled polyester	
1CD01	Linen
1CD02	Khaki
1CD03	Iceberg
1CD04	Zinc
1CD05	Blue Black

Price category 2 continued on next page

Price Category 2
continued

Cord	
66” wide	
51% antimony-free polyester	
49% polyester	
5101	Ivory
5102	White Ash
5103	Linen
5104	Bamboo
5105	Sepia
5106	Wicker
5107	Sesame
5108	Kiwi Green
5109	Bayou
5110	Shade
5111	Spring Wood
5112	Summer White

Crepe	
54” wide	
100% recycled polyester	
9201	Licorice
9203	Smoke
9207	Cherry
9209	Claret
9212	Raisin
9218	Aquamarine
9223	Cadet
9241	Beachglass
9243	Midnight
9244	Artichoke
9248	Warm White *
9249	Stone *
9250	Earth
9251	Fog *
9252	Slate Grey
9253	Yellow Dark
9254	Coral
9255	Blush Grey *
9256	Wild Berry
9257	Clover
9258	Caribbean
9259	Cerulean
9260	Brownstone
9261	Shale
9262	Graphite
9263	Tomato
9264	Green Apple

* Colors available on Exclave® Video-friendly Tackable Boards and Stowage Tackable Backdrop.

Epic	
54” wide	
56% recycled polyester	
44% polyester	
Acrylic backing	
3EP01	Alabaster
3EP02	Smoke
3EP03	Falcon
3EP04	Citrus Spring
3EP05	Copper
3EP06	Urban Orange
3EP07	Poppy
3EP08	Wild Plum
3EP09	Sugar Plum
3EP10	Clover
3EP11	Loden
3EP12	Everglade
3EP13	Mist
3EP14	Peacock
3EP15	Cadet
3EP16	Indigo
3EP17	Spring Wood
3EP18	Grey Brindle
3EP19	Seed
3EP20	Carbon Dark

Fish Net	
55” wide	
100% recycled polyester	
22Q01	Oyster
22Q02	Stone
22Q03	Citrus
22Q04	Curry
22Q05	Chipotle
22Q06	Cherry
22Q07	Fuschia
22Q08	Claret
22Q09	Purple
22Q10	Clover
22Q11	Pesto
22Q12	Peacock
22Q13	Lagoon
22Q14	Twilight
22Q15	Bluestone
22Q16	Storm
22Q17	Black
22Q18	Cocoa

Frost	
66” wide	
100% recycled polyester	
5703	Porcelain
5704	Honey
5705	Iceberg
5706	Sage
5710	Sable Grey

Price category 2 continued on next page

Price Category 2
continued

Grosgrain
66” wide
100% recycled polyester

8401	Pearl * **
8402	White Ash
8403	Warm Grey
8404	Khaki
8405	Oyster *
8406	Celadon
8408	Spa Blue
8409	Bud
8410	Kiwi Green
8411	Bayou
8412	Tin
8413	Iceberg *

* Colors not available on Canvas Dock Mounted Screens, Locale® Workbase Screen, Public Office Landscape® Screen/Desk Top Divider, and Thrive® Personal Side Screen.
** Color not available on Canvas Tiles.

Horizon
54” wide
65% antimony-free polyester
35% polyester

4N01	Rye Grass
4N02	Sugar Pine
4N03	Silver Pine
4N04	White Ash
4N05	Spring Wood
4N06	Tamarack
4N07	Mushroom
4N08	Haystack
4N09	Oat Grass
4N10	Forest Moss
4N11	Hickory
4N12	Beech Nut
4N13	Pine Cone
4N14	Poplar
4N15	Elderberry

Loom
54” wide
100% polyester

1LM01	Linen
1LM02	Brown Sugar and Spice
1LM03	Brick and Mortar
1LM04	Salt and Pepper
1LM05	Black
1LM06	Lemongrass
1LM07	Poppy
1LM08	Wild Berry
1LM09	Loden
1LM10	Jade
1LM11	Deep Sea

Medley
54” wide
100% polyester

1HA01	Stone *
1HA02	Trail
1HA03	Charcoal
1HA04	Cinder
1HA05	Citrus
1HA06	Papaya
1HA07	Chutney
1HA08	Tundra
1HA09	Feather Grey *
1HA10	Chartreuse
1HA11	Loden
1HA12	Peacock
1HA13	Bayou *
1HA14	Blue Grotto
1HA15	Blueberry
1HA22	Khaki
1HA23	Pewter
1HA24	Yellow Oxide
1HA25	Vintage Rose
1HA26	Raspberry
1HA27	Acai Berry

* Colors available on Exclave® Video-friendly Tackable Boards and Stowage Tackable Backdrop

Moiré
54” wide
100% recycled polyester

3A01	Concrete
3A02	Biscotti
3A03	Rattan
3A04	Chambray
3A05	Fern
3A08	Violet
3A09	Zin
3A10	Curry
3A11	Spice
3A12	Cork

Rivet
54” wide
100% recycled polyester

1RV01	Twig
1RV02	Deep Clay
1RV03	Woodrose
1RV04	Otter
1RV05	Hemlock
1RV06	Olive
1RV07	Lagoon
1RV08	Deep Sea
1RV09	Charcoal
1RV10	Grey Brindle

Sequel
54” wide
100% vinyl
100% polyester knit backing
Resilience® finish

3SL01	White
3SL02	Pebble
3SL03	Mushroom
3SL04	Stone
3SL05	Chestnut
3SL06	Rattan
3SL07	Black Cherry
3SL08	Tundra
3SL09	Seal
3SL10	Blue Fog
3SL11	Folkstone
3SL12	Shale
3SL13	Slate Grey
3SL14	Charcoal
3SL15	Carbon Dark

Twist
54” wide
80% antimony-free polyester
13% recycled polyester
7% polyester

8R05	Wicker
8R10	Poppy
8R14	Tin
8R15	Shale
8R16	Graphite
8R17	Birch
8R18	Sepia
8R22	Blueberry
8R23	Green Apple
8R26	Gunmetal
8R27	Cinder
8R28	Citrus
8R29	Pekoe
8R30	Tangerine
8R31	Red Plum
8R32	Wisteria
8R33	Forest
8R34	Jade Dark
8R35	Waterfall
8R36	Midnight Blue
8R37	Carbon Dark

Twist
For workspaces products only.
54” wide
80% antimony-free polyester
13% recycled polyester
7% polyester

5S01	Pearl
5S02	Ivory
5S03	Oyster

Price category 2 continued on next page

Price Category 2
continued

Well Suited	
55” wide	
79% polyester	
21% recycled polyester	
22T01	Oyster
22T02	Raffia
22T03	Peppermint
22T08	Cool Grey
22T16	Jade
22T17	Peacock
22T18	Blueberry

Price Category 3

Bento	
54” wide	
100% antimony-free polyester	
7001	Frost
7002	Linen
7003	Khaki
7004	Truffle
7005	Grey Black
7006	Pumpkin
7007	Cranberry
7008	Everglade
7009	Cobalt

Connection	
66” wide	
100% antimony-free polyester	
1FB1	Oyster
1FB2	Linen
1FB3	Iceberg
1FB4	Silver Pine
1FB5	Apricot
1FB6	Cumin
1FB7	Green Apple
1FB8	Slate Blue
1FB9	Metal

Current	
66” wide	
100% antimony-free polyester	
1FC1	Oyster
1FC2	Linen
1FC3	Iceberg
1FC4	Silver Pine
1FC5	Apricot
1FC6	Cumin
1FC7	Green Apple
1FC8	Slate Blue
1FC9	Metal

Glaze	
66” wide	
100% recycled polyester	
8Z01	Wicker
8Z02	Honey
8Z03	Porcelain
8Z04	Celadon
8Z06	Rye
8Z07	Frost
8Z08	Silver Birch

Ground Cloth®	
66” wide	
100% polyester	
4701	Vapor Grey
4721	Warm White *
4722	Fog *
4723	Straw *
4724	Red Orange *
4725	Wild Berry *
4726	Green Apple *
4727	Caribbean *
4728	Midnight *
4729	Cappuccino *

* Colors available on Exclave® Video-friendly Tackable Boards and Stowage Tackable Backdrop

Kira 2	
54” wide	
100% recycled polyester	
5D11	Flaxen
5D12	Papyrus
5D13	Oasis
5D14	Incense
5D15	Ash
5D16	Falcon

Pins and Needles	
58” wide	
76% recycled polyester	
24% polyester	
22R01	Day and Night
22R02	Night and Day

Savannah	
66” wide	
76% recycled polyester	
24% polypropylene	
8L01	Pearl
8L02	Oyster
8L03	Wheat
8L04	Jute
8L05	Bamboo
8L06	Metal
8L07	Linen
8L08	Celadon
8L09	Moss
8L10	Frost
8L11	Shale
8L12	Pewter

Price category 3 continued on next page

Price Category 3
continued

Strands
66” wide
100% recycled polyester

8W01	Pebble
8W02	Porcelain
8W03	Taupe
8W04	Honey
8W05	Khaki
8W06	Rye
8W07	Wicker
8W08	Tin
8W09	Cool Grey

String Plaid
54” wide
100% recycled polyester

22V01	Warm White on Khaki
22V02	Mint on Yellow Green
22V03	Mist on Blue Grey
22V04	Sky Blue on Red
22V05	Lime on Magenta
22V06	Bright Green on Green
22V07	Aqua Blue on Cerulean
22V08	Ivory on Black

Price Category 4

Glisten
66” wide
84% polyester
16% recycled polyester

2X02	Rye
2X05	Iceberg
2X09	Pewter
2X10	Ash

Loft
Assigned lead-time textile. A
54” wide
100% wool

22L01	Heathered Light Green
22L02	Heathered Dark Green
22L03	Heathered Turquoise
22L04	Heathered Navy
22L05	Heathered Orange
22L06	Heathered Red
22L07	Heathered Tan *
22L08	Heathered Grey *
22L09	Heathered Blue *
22L10	Heathered Brown
22L11	Heathered Dark Grey
22L12	Heathered Denim

* Colors available on Exclave®
Video-friendly Tackable
Boards and Stowage Tackable
Backdrop

Quilty
56” wide
100% antimony-free polyester
GreenShield

6S03	Khaki
6S04	Straw
6S07	Brick
6S10	Mink
6S11	Green Apple
6S13	Indigo
6S14	Zinc
6S15	Slate
6S16	Beachwood
6S17	Paprika
6S18	Plum
6S19	Juniper
6S20	Grey Black

Price Category 5

Hopsak
56” wide
100% recycled polyester

14A20	Black
14A22	Raw Umber Dark
14A26	Grey Blue Dark
14A30	Sepia Dark
14A38	Emerald Dark
14A39	Yellow Dark
14A40	Orange
14A41	Sienna
14A42	Olive Green Dark
14A43	Crimson
14A44	Crimson Dark Dark
14A45	Violet Dark
14A46	Pink Dark Dark
14A47	Ultramarine Dark
14A48	Cobalt Blue
14A49	Terra Cotta
14A50	Ochre Dark

For more information about our products and services or to see a list of dealers, please visit us at HermanMiller.com or call (800) 851 1196.

© 2019 Herman Miller, Inc., Zeeland, Michigan

Distribution Rights

Working together since 1956, Herman Miller and Vitra are the authentic sources of designs by Charles and Ray Eames, Alexander Girard, and George Nelson. All the designs shown in this book are protected by law. Herman Miller has obtained all rights to make and sell these designs. Also, Herman Miller holds exclusive worldwide manufacturing and distribution rights for these products with the following exceptions:

Charles and Ray Eames, George Nelson, and Alexander Girard—Worldwide distribution rights for furniture in all areas except Europe and the Middle East. For those areas, please contact Vitra.

Isamu Noguchi—Worldwide distribution rights for the Noguchi Rudder Table. Distribution rights for the Noguchi Table in North America and Central America only. For all other areas, please contact Vitra.

Magis—Exclusive distribution rights in the US and Canada. For all other areas, please contact Magis.

Mattiazzi—Exclusive distribution rights in the US and Canada. For all other areas, please contact Mattiazzi.

® HermanMiller, ⓗ, 3D Intelligent, AO, Action Office, Aeron, ArcSpan, Aside, Avall, Avive, Bubble Lamps, Canvas Office Landscape, Caper, Celle, Co/Struc, Daisyone, Distil, Eames, Eco-Dematerialized, Embody, Envelop, Equa 2, Ergon 3, Ethospace, Exclave, Fine-Tune, FlexFront, Flo, Formcoat, Formwork, Ground Cloth, Herman Miller for the Home, Herman Miller for Healthcare, Intersect, Kinemat, Lapjack, Layout Studio, Lifework, Limerick, Live Unframed, Living Office, Locale, Maharam, Meridian, Mirra, Passage, Pellicle, Perspectives, PostureFit, Public Office Landscape, Resolve, Rodney, Sayl, Setu, Thrive, Tu, Wishbone, and Y-Tower are among the registered trademarks of Herman Miller, Inc., and its owned subsidiaries.

™ 8Z Pellicle, About Face, AireWeave, Albert, Backfit, Bubbletack, Burdick Group, Butterfly Back, Celeste, Cellular Suspension, Clam, Compass, Connect, Cosm, Cubert, DOT, Duracare, Durawrap, Eames Soft Pad, EnhancedAccess, Everywhere, Flex-Edge, Flute, Harmonic, Herman Miller Select, Hopsak 2, Intent, Iota, Jaw, Keyless Entry, Keyn Chair Group by Herman Miller, Latitude, Lino, Locale, Logic Mini, Logic Power Access Solutions, Live OS, Loop, Lyris, Lyris 2, Made-to-Measure Storage, Metaform Portfolio, Mora, Motia, Multiscrim, Nelson, Nevi, Overlay, Pari, Pixelated Support, Plex, PostureFit SL, Prospect, Q, Renew, Sense, Soft Pad, Stackable, Stackable Storage, Striad, Swoop, Tone, TriFlex, Twist, Ubi, Verus, Vista and Wireframe are among the trademarks of Herman Miller, Inc., and its owned subsidiaries.

SM Herman Miller Options is among the service marks of Herman Miller, Inc.

AAP™ is a trademark of Extron Electronics.

Alexander Girard® is a registered trademark of The Alexander Girard Estate.

Chemsurf® is a registered trademark of Wilsonart International.

Corian® is a registered trademark of E. I. du Pont de Nemours and Company Corporation.

Crypton® is a registered trademark of Crypton, Inc.

DACRON® is a registered trademark of INVISTA S.a r.l.

Decora® is a registered trademark of Leviton Manufacturing Co., Inc.

Edelman® Leather is a registered trademark of Edelman Leather, Inc.

Extron® is a registered trademark of RGB Systems, Inc.

FENIX NTM® is a registered trademark of Arpa Industriale S.p.A.

FLEXNET™ is a trademark of Milliken & Company.

Floor Saver Glide® is a registered trademark of Carpin Manufacturing, Inc.

Geiger® is a registered trademark, and Bumper™, Saiba™, and Ward Bennett™ are trademarks, of Geiger International.

Goetz™ is a trademark of Mark W. Goetz.

Hang-It-All® is a registered trademark of Lucia Eames Demetrios, d.b.a. Eames Office.

Holophane® is a registered trademark of Holophane.

Ingeo™ is a trademark of Cargill Dow LLC.

iPad® is a registered trademark of Apple, Inc.

Leviton® is a registered trademark of Leviton Manufacturing Co., Inc.

LifeSize® is a registered trademark of LifeSize Communications, Inc.

Magis®, Bombo®, and Me Too® are registered trademarks of Magis S.p.A.

Microsoft® and Natural® Keyboard are registered trademarks of Microsoft Corporation.

Noguchi® and the Noguchi table configuration (trade dress) are registered trademarks, and Rudder Table™ is a trademark, of The Isamu Noguchi Foundation and Garden Museum.

Place Textiles® is a registered trademark of Place Textiles.

SuperSeat™ is a trademark of Dahti Seating, a division of ITW.