GSA prices effective April 1, 2019
(based on January 7, 2019, commercial price list)
Published April 2019

Laboratory Furniture

Compass™ System

General Services Administration
Federal Supply Service
Authorized Federal Supply Schedule Price List

Online access to contract ordering information, terms and conditions, up-to-date pricing, and the option to create an electronic delivery order is available through GSA Advantage!®, a menu-driven database system. The Internet address for GSA Advantage! is www.gsaadvantage.gov. For more information on ordering from Federal Supply Schedules, click on the FSS Schedules button at www.fss.gsa.gov.

FSC Group 66, Part II, Section N
FSC Classes 66 40
Contract Number: GS-07F-5623R
Contract Period: February 1, 2015, through January 31, 2020

Herman Miller, Inc.
855 East Main Avenue
Zeeland, Michigan 49464
(616) 654 3000 Phone
(616) 654 8278 Fax
www.HermanMiller.com/government

Business Size: Large

Contract Information

1a. Special Item Numbers (SIN)

566-1: Modular Laboratory Furniture Systems, all product except non-modular Laboratory Tables.

1b. Lowest Price Model:
TW113 $8

1c. Not applicable.

2. Maximum Order. $400,000 net product value.

3. Minimum Order. $50 net.

4. Geographic Coverage. 48 contiguous states and District of Columbia. Other geographic locations see box below.

5. Production Points. Zeeland, Michigan, County of Ottawa.

6. Pricing. Prices shown are list. To calculate contract prices, deduct 58.5%.

7. Quantity Discounts. Reference item #6.

8. Payment Terms. Net 30 days.

9a. Government Purchase Cards. ARE accepted below the micropurchase threshold.

9b. Government Purchase Cards. ARE accepted above the micropurchase threshold.

10. Foreign Items. Not applicable.

11a. Time of Delivery. 56 days ARO.

11b. Expedited Delivery. Select items may be available for expedited delivery. Contact Herman Miller, Inc., or local authorized dealer for availability.

11c. Overnight and 2-Day Delivery. Select items may be available for overnight or 2-day delivery. Contact Herman Miller, Inc., or local authorized dealer for availability.

11d. Urgent Requirements. Select items may be available for urgent delivery. Contact Herman Miller, Inc., or local authorized dealer for availability.

12. F.O.B. Point. Destination within the 48 contiguous states and Dist. of Columbia.

13a. Order Address. Herman Miller, Inc., Government Customer Care 0161, 855 East Main Avenue, Zeeland, MI 49464.

13b. Order Procedures. For supplies and services, the ordering procedures, information on Blanket Purchase Agreements(BPA's), and a sample BPA can be found at the GSA/FSS Schedule home page (www.fss.gsa.gov/schedules).

14. Payment Address. Herman Miller, Inc., 22764 Network Place, Chicago, IL 60673-1227.

15. Warranty Provisions. Herman Miller, Inc., commercial warranty applies.

16. Export Packing Charges. Prices supplied on request.

17. Terms and Conditions of Government Commercial Credit Card Acceptance. None.

18. Terms and Conditions of Rental, Maintenance, and Repair. Not applicable.

19. Terms and Conditions of Installation. Installation services shall be negotiated between ordering agency and Herman Miller local authorized dealer.

20. Terms and Conditions of Repair Parts. Not applicable.

20a. Terms and Conditions for Any Other Services. Services shall be negotiated between ordering agency and Herman Miller local authorized dealer.

21. List of Service and Distribution Points. Access Herman Miller web site for current list of participating dealers: www.HermanMiller.com.

22. List of Participating Dealers. Access Herman Miller web site for current list of participating dealers: www.HermanMiller.com.

23. Preventive Maintenance. Not applicable.

24. Special Attributes. Reconfigurable, renewable.

25. DUNS Number. 006012801

26. Registered in Central Contractor Registration (CCR) Database.

"Herman Miller, Inc."

Herman Miller Miscellaneous Information:
Federal ID Number: 38-0837640
Commercial and Government Entity Code (CAGE): 40636

Contents

Introduction	**page 2**
Compass™ System	**3**
Walls	5
Surfaces	44
Storage	63
Close-Outs	92
Transport	98
Rails and Accessories	100
Indices	**119**
By Name	119
By Number	121
Appendices	
20-Day or Less/Assigned Lead-Time Order Information - Healthcare	

For the latest materials information, refer to the Materials pages on HermanMiller.com.

Introduction

A Note on the Organization of This Book

There are a few signals that will help you understand the organization of this book. Once you know them, you should be able to find your way around easily.

Like a newspaper, this book is formatted with columns of text and illustrations that run vertically.

Information wraps from one column to the next and continues for as many pages as it needs to.

Black bars are clues.

A black bar at the top of a page signals the start of information about a product.

This information is divided into two sections, each signaled by a black bar. Product Information includes a description, additional notes, and dimensional drawings. Specification Information, which always begins at the top of a column, includes a series of steps. Each step represents a decision you need to make in order to complete your product number. Steps must be followed sequentially. The number of pages needed to complete information on a product varies; some will be complete in one page; others may fill three or four pages. Just continue going through the steps until you run into the next product, signaled by the black bar at the top of the page.

Black tabs running along the outside edge of the page help you locate what section you are in or what section you want to go to. You can thumb forwards or backwards to find a section; tabs and text appear on both sides of the page.

The additional pages in the back of the book include the appendices and indices. They are signaled by a long black bar running along the outside edge of the page.

The index is presented two ways.

The first index is in alphabetical order by product name. It can be helpful if you are new to the products and numbering scheme or if you are looking for a type of product, such as work chair or round table.
The second index is by product number. It lists, in alphanumeric order, the base product number, typically a five-digit number.

General Information

This book is effective April 1, 2019, subject to change without notice. Products may be purchased from authorized Herman Miller dealers who will quote prices upon request. For more information about our products and services or to see a list of dealers, visit www.HermanMiller.com.

All prices are list prices. Additional services, such as planning services, design, storage, and installation, are not included and must be added to these prices when the additional services are requested.

Illustrations, specifications, and prices are based on the latest information at the time of publication. The right is reserved to make changes at any time without notice in prices, fabrics, finishes, materials, specifications, and models, and also to discontinue models and finishes.

Dimensions shown in the drawings are engineering drawing dimensions rounded up to the nearest 1/8". Product is shipped set up or knocked down. Products that include "Shipped knocked down" in the description require some assembly. If this statement does not appear in the description, the product is shipped assembled.

Service problems are normally handled by a Herman Miller authorized dealer. Where this cannot be accomplished on a local level, service problems should be referred to the Customer Care Representative for your region, Herman Miller, Inc., Zeeland, Michigan 49464.

20-Day or Less/Assigned Lead-Time Shipments

All products and options in this price book not designated by an Assigned Program icon A will ship in **20 business days or less** after being acknowledged by Herman Miller.

Products and options designated by an A are on the assigned lead-time program and may ship in 20 days, less than 20 days, or more than 20 days from order acknowledgement.

Walls

Surfaces

Storage

Close-Outs

Transport

Rails and Accessories

Wall Rail TW100.

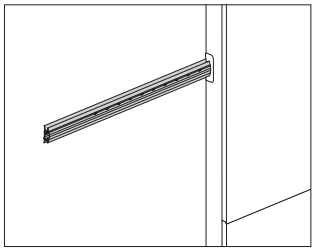

Product Information

Description

This rail attaches to an architectural wall to support stiles for attaching tiles and components. The rail does not require attaching to wall studs; it attaches directly to finished 5/8"-thick or thicker drywall using wall anchors specified separately. Finish is anodized aluminum.

Notes

Specify wall anchors (TW109.) separately.

Specify optional products separately:

- Wall Rail End Cap (TW104.)
- Wall Rail Insert (TW102.)

Dimensions

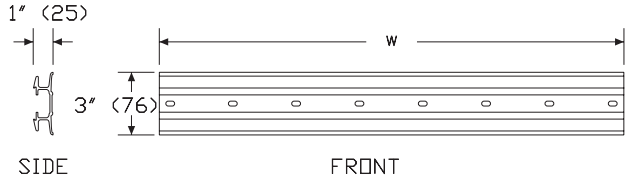

Specification Information

Step 1.

TW100.

Step 2. Width

18	18" wide
24	24" wide
30	30" wide
36	36" wide
42	42" wide
48	48" wide
54	54" wide
60	60" wide
66	66" wide
72	72" wide
78	78" wide
84	84" wide
96	96" wide

Prices for Steps 1-2.

TW100.	**18**	$37
	24	$45
	30	$53
	36	$63
	42	$72
	48	$79
	54	$89
	60	$98
	66	$107
	72	$112
	78	$121
	84	$130
	96	$148

Wall Rail Insert TW102.

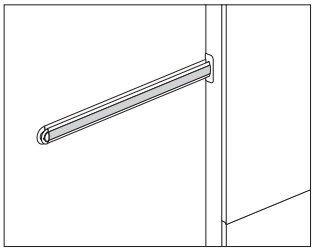

Product Information

Description

This individual insert fits into a wall rail to finish the front and conceal the mounting screws. The insert can be cut to length in the field. Finish is cool grey neutral.

Dimensions

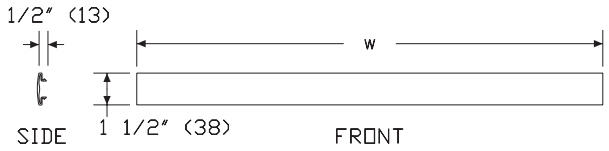

Specification Information

Step 1.

TW102.

Step 2. Width

48	48″ wide
96	96″ wide

Prices for Steps 1-2.

TW102.	**48**	$27
	96	$41

Wall Rail End Cap TW104.

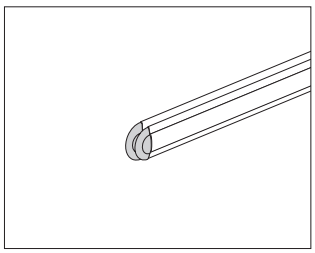

Product Information

Description

This end cap attaches to a wall rail to finish the end when the rail is exposed. It has a metallic silver plate with a cool grey neutral cover. Package of 2.

Dimensions

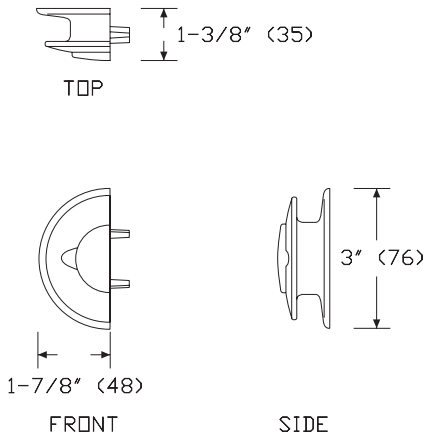

Specification Information

Step 1.

TW104.	$126

Wall Anchors TW109.

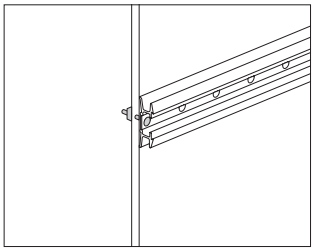

Product Information

Description

These anchors attach a wall rail to an architectural wall. Anchors are required every 6″ along the entire length of the wall rail, and allow the rail to attach to 5/8″-thick or thicker drywall, without having to attach to wall studs. Package of 100.

Dimensions

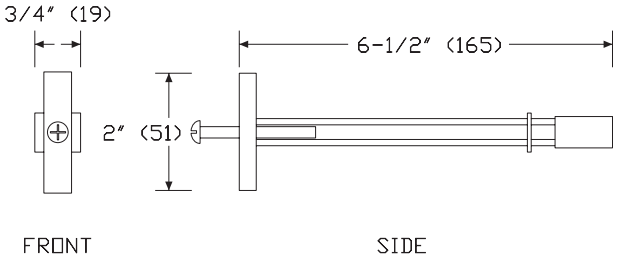

Specification Information

Step 1.

TW109.	$231

Stile, Rail-Attached TW110.

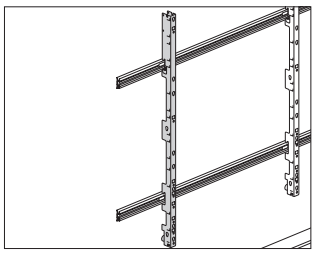

Product Information

Description

This individual stile mounts on wall rails. 2 stiles are required for attaching tiles and components, creating a module. Multiple modules can be placed on the wall rails to finish a wall. The stile has cutouts for routing cables and conduit, and includes anti-dislodgement clips.

Notes

Specify stile connector kit (TW113.) separately to minimize gaps between adjacent tiles and components.

Specify 64"-high stiles for mounting on 2 wall rails to create a full-height module.

Specify 24" -high stiles for mounting on 1 wall rail to create a lower module.

Dimensions

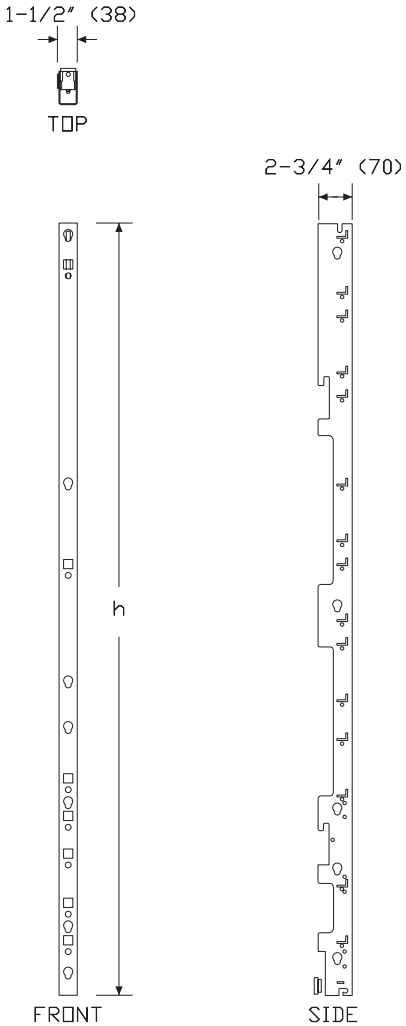

Specification Information		
Step 1.		
TW110.		
Step 2. Height		
24	24″ high	
64	64″ high	
Prices for Steps 1-2.		
TW110.	**24**	$62
	64	$70

Stile Lockdown TW112.

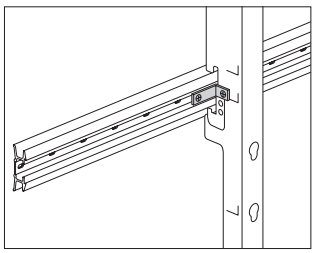

Product Information

Description

This hardware locks a stile in place on the wall rail(s) to eliminate movement. 1 lockdown is required per wall application.

Dimensions

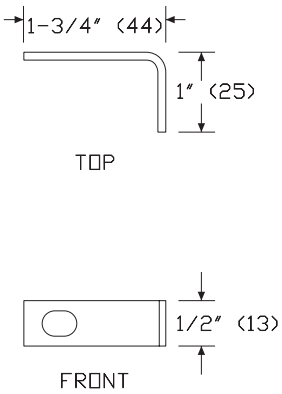

Specification Information

Step 1.

TW112. $17

Stile Connector Kit TW113.

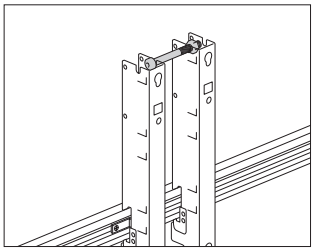

Product Information

Description

This kit connects 2 adjacent stiles at the top and bottom to provide alignment and minimize gaps when tiles and components are attached. Package of 2.

Dimensions

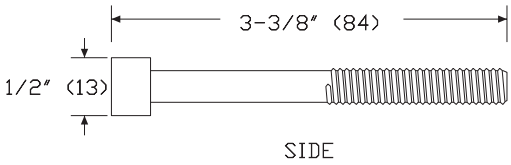

Specification Information

Step 1.

TW113. $8

Stile, Chase Tile TW114.

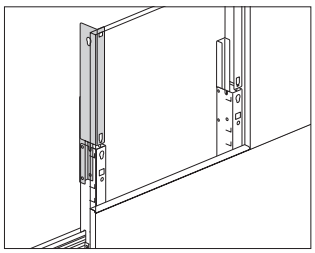

Product Information

Description

This individual stile attaches to the top of a rail-attached stile. 2 stiles are required for attaching a chase tile. Attachment hardware included.

Notes

Specify chase tile (TW182.) separately.

Dimensions

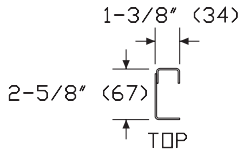

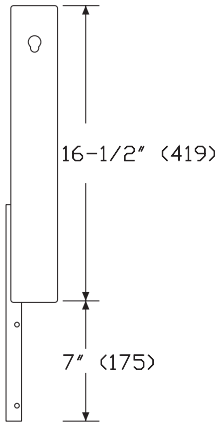

SIDE

FRONT

Specification Information

Step 1.

TW114.

Step 2. Type

L	left
R	right

Prices for Steps 1-2.

TW114.	**L**	$81
	R	$81

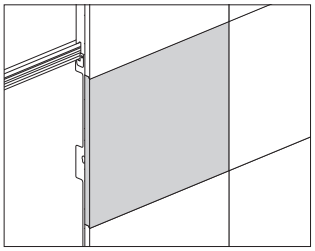

Product Information

Description

This tile attaches to 2 rail-attached stiles to provide a finished cover and is available in 3D laminate or Corian®. Durawrap™ 3D laminate is a 99.9% PVC-free material. The top and bottom edges are ship lapped (shingled); creating a flush joint between tiles that prevents liquids from seeping back.

Dimensions

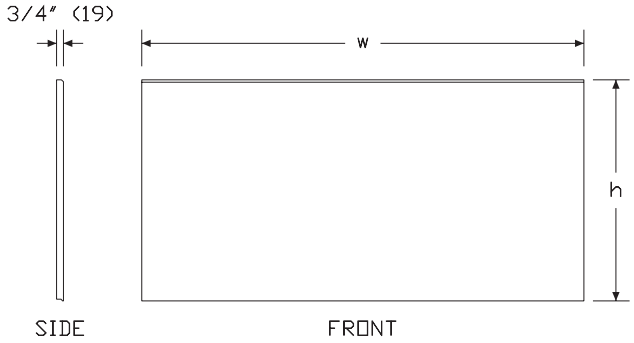

Specification Information

Step 1.

TW120.

Step 2. Height

20	20" high
24	24" high
40	40" high

Step 3. Width

12	12" wide
18	18" wide
24	24" wide
30	30" wide
36	36" wide
42	42" wide
48	48" wide

Step 4. Surface Material

For 20" high (20) or 24" high (24)

A	durawrap™ 3D laminate
K	corian
P	3D laminate A

For 40" high (40)

A	durawrap™ 3D laminate
P	3D laminate A

Prices for Steps 1-4.

		A	K	P
TW120. 20	**12**	$157	418	144
	18	$166	489	153
	24	$175	580	161
	30	$198	791	182
	36	$224	877	203
	42	$258	957	237
	48	$294	1038	269
24	**12**	$169	505	155
	18	$181	594	166
	24	$192	683	176
	30	$211	817	193
	36	$229	953	208
	42	$264	1054	244
	48	$301	1156	275

40	**12**	$253	—	232
	18	$274	—	251
	24	$294	—	269
	30	$336	—	307
	36	$377	—	345
	42	$411	—	375
	48	$445	—	404

Step 5. Surface Finish

Solid-Color

For durawrap™ 3D laminate (A)

91	white	+$0
LU	soft white	+$0

Wood-Grain

For durawrap™ 3D laminate (A)

76	light brown walnut	+$10
HX	aged cherry	+$10
HM	natural maple	+$10
PX	Nemschoff light cherry	+$10
OG	honey maple	+$10

For corian (K)

1N	canyon	+$50
CQ	glacier white	+$0
QB	bisque	+$0
1E	flint	+$120
1S	savannah	+$50
1U	sahara	+$50
3I	mojave	+$50
4I	sandstone	+$50
58	cameo white	+$0
IQ	aurora	+$50
OQ	silt	+$50
Q1	vanilla	+$0
7I	raffia	+$120
BLP	blue pebble	+$120

For 3D laminate (P)

120	light maple woodgrain 3D laminate A	+$0
121	golden maple woodgrain 3D laminate A	+$0
122	brown walnut woodgrain 3D laminate A	+$0
123	chocolate walnut woodgrain 3D laminate A	+$0
124	warm cherry woodgrain 3D laminate A	+$0
125	light teak woodgrain 3D laminate A	+$10
126	basic white 3D laminate A	+$0

Bed Tile TW122.

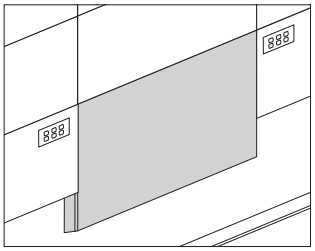

Product Information

Description

This tile attaches to 2 rail-attached stiles to provide a finished cover and has a durawrap surface. It protects the architectural wall from being damaged due to contact with a bed. The top edge is ship lapped (shingled); creating a flush joint between tiles that prevents liquids from seeping back. Side close-outs and a wall saver to protect the architectural wall behind the tile are included.

Notes

Bottom close-out finish always in soft white (LU).

Dimensions

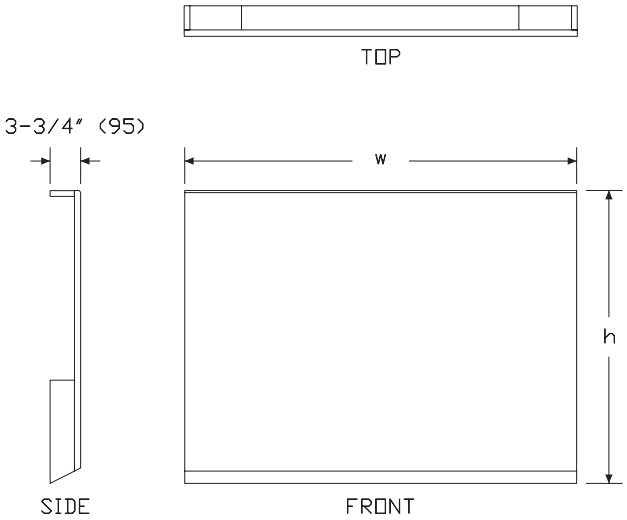

Specification Information

Step 1.

TW122. A

Step 2. Height

36	36" high A
39	39" high A

Step 3. Width

36	36" wide
48	48" wide

Step 4. Surface Material

A	durawrap™ 3D laminate
P	3D laminate A

Prices for Steps 1-4.

			A	P
TW122.	**36**	**36**	$601	498
		48	$636	579
	39	**36**	$692	618
		48	$730	674

Step 5. Close-Out Finish

91	white	+$0
LU	soft white	+$0

Step 6. Surface Finish

Solid-Color

For durawrap™ 3D laminate (A)

91	white	+$0
LU	soft white	+$0

Wood-Grain

For durawrap™ 3D laminate (A)

76	light brown walnut	+$10
HX	aged cherry	+$10
HM	natural maple	+$10
PX	Nemschoff light cherry	+$10
OG	honey maple	+$10

For 3D laminate (P)		
120	light maple woodgrain 3D laminate A	+$0
121	golden maple woodgrain 3D laminate A	+$0
122	brown walnut woodgrain 3D laminate A	+$0
123	chocolate walnut woodgrain 3D laminate A	+$0
124	warm cherry woodgrain 3D laminate A	+$0
125	light teak woodgrain 3D laminate A	+$10
126	basic white 3D laminate A	+$0

Work Surface Tile TW124.

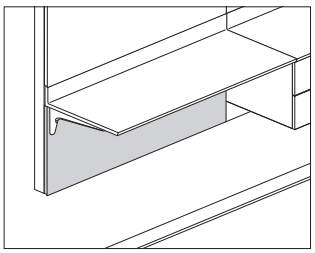

Product Information

Description

This tile attaches to 2 rail-attached stiles to provide mounting of a work surface and has a 3D laminate surface. Durawrap™ 3D laminate is a 99.9% PVC-free material. It has partially-drilled holes in the back for seated-height and standing-height surfaces. The top and bottom edges are ship lapped (shingled); creating a flush joint between tiles that prevents liquids from seeping back.

Dimensions

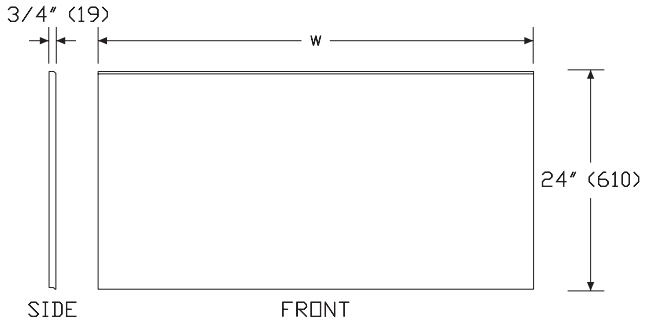

Specification Information

Step 1.

TW124.

Step 2. Width

12	12″ wide
18	18″ wide
24	24″ wide
30	30″ wide
36	36″ wide
42	42″ wide
48	48″ wide

Step 3. Work Surface Type

AW	seated height with backsplash
BW	standing height with backsplash
CN	standing or seated height, no backsplash

Step 4. Surface Material

A	durawrap™ 3D laminate
P	3D laminate A

Prices for Steps 1-4.

			A	P
TW124.	**12**	**AW**	$126	114
		BW	$218	189
		CN	$255	232
	18	**AW**	$127	115
		BW	$203	198
		CN	$251	230
	24	**AW**	$148	129
		BW	$222	202
		CN	$272	250
	30	**AW**	$168	156
		BW	$250	216
		CN	$306	280
	36	**AW**	$211	193
		BW	$265	229
		CN	$342	312
	42	**AW**	$202	186
		BW	$250	229
		CN	$339	310
	48	**AW**	$228	209
		BW	$273	251
		CN	$371	340

Step 5. Surface Finish

Solid-Color

For durawrap™ 3D laminate (A)

91	white	+$0
LU	soft white	+$0

Wood-Grain

For durawrap™ 3D laminate (A)

76	light brown walnut	+$10
HX	aged cherry	+$10
HM	natural maple	+$10
PX	Nemschoff light cherry	+$10
OG	honey maple	+$10

For 3D laminate (P)

120	light maple woodgrain 3D laminate A	+$0
121	golden maple woodgrain 3D laminate A	+$0
122	brown walnut woodgrain 3D laminate A	+$0
123	chocolate walnut woodgrain 3D laminate A	+$0
124	warm cherry woodgrain 3D laminate A	+$0
125	light teak woodgrain 3D laminate A	+$10
126	basic white 3D laminate A	+$0

Rotating Work Surface Tile TW126.

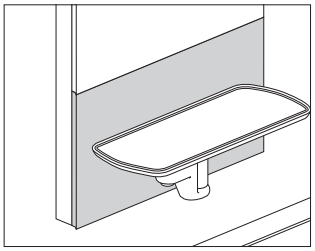

Product Information

Description

This tile attaches to 2 rail-attached stiles to provide mounting of a rotating work surface. It has a durawrap finish.

Dimensions

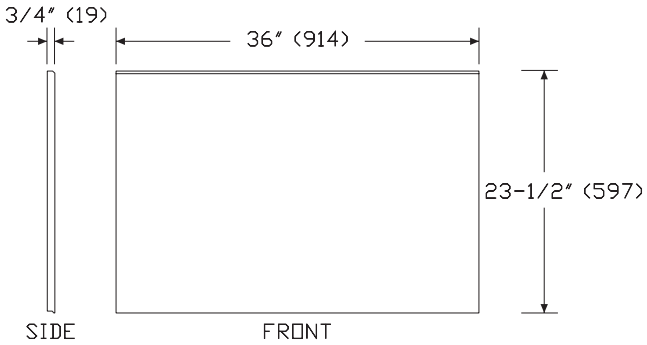

Specification Information

Step 1.

TW126.2436

Step 2. Surface Material

A	durawrap™ 3D laminate
P	3D laminate A

Prices for Steps 1-2.

TW126.2436	**A**	$239
	P	$218

Step 3. Surface Finish

Solid-Color

For durawrap™ 3D laminate (A)

91	white	+$0
LU	soft white	+$0

Wood-Grain

For durawrap™ 3D laminate (A)

76	light brown walnut	+$15
HX	aged cherry	+$15
HM	natural maple	+$15
PX	Nemschoff light cherry	+$15
OG	honey maple	+$15

For 3D laminate (P)

120	light maple woodgrain 3D laminate A	+$0
121	golden maple woodgrain 3D laminate A	+$0
122	brown walnut woodgrain 3D laminate A	+$0
123	chocolate walnut woodgrain 3D laminate A	+$0
124	warm cherry woodgrain 3D laminate A	+$0
125	light teak woodgrain 3D laminate A	+$15
126	basic white 3D laminate A	+$0

Above-Sink Tile TW128.

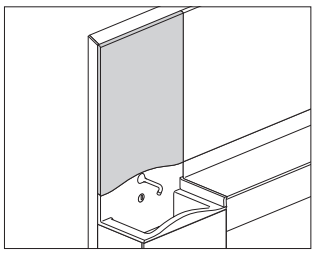

Product Information

Description

This tile attaches to 2 rail-attached stiles to finish the area above a 13"-deep sink. The bottom of the tile is contoured to match the backsplash of the sink. It is available in 3D laminate or Corian®. Durawrap™ 3D laminate is a 99.9% PVC-free material. The top and bottom edges are ship lapped (shingled); creating a flush joint between tiles that prevents liquids from seeping through.

Dimensions

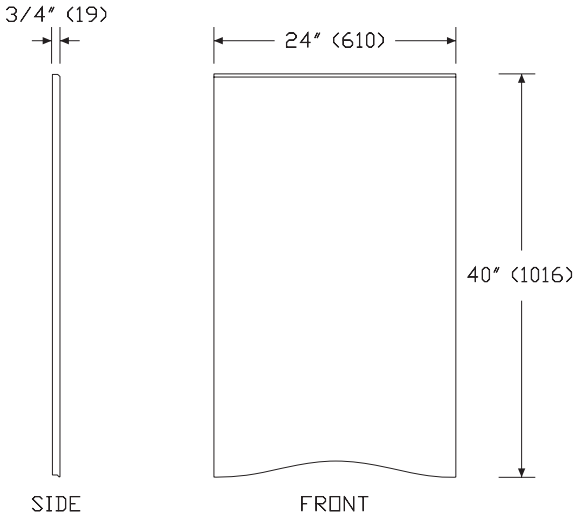

Specification Information

Step 1.

TW128.

Step 2. Height

20	20" high
40	40" high

Step 3. Surface Material

For 20" high (20)

A	durawrap™ 3D laminate
K	corian
P	3D laminate A

For 40" high (40)

A	durawrap™ 3D laminate
P	3D laminate A

Prices for Steps 1-3.

		A	K	P
TW128.	**20**	$163	602	150
	40	$288	—	263

Step 4. Surface Finish

Solid-Color

For durawrap™ 3D laminate (A)

91	white	+$0
LU	soft white	+$0

Wood-Grain

For durawrap™ 3D laminate (A)

76	light brown walnut	+$10
HX	aged cherry	+$10
HM	natural maple	+$10
PX	Nemschoff light cherry	+$10
OG	honey maple	+$10

For corian (K)		
1N	canyon	+$50
CQ	glacier white	+$0
QB	bisque	+$0
1E	flint	+$120
1S	savannah	+$50
1U	sahara	+$50
3I	mojave	+$50
4I	sandstone	+$50
58	cameo white	+$0
IQ	aurora	+$50
OQ	silt	+$50
Q1	vanilla	+$0
7I	raffia	+$120
BLP	blue pebble	+$120

For 3D laminate (P)		
120	light maple woodgrain 3D laminate A	+$0
121	golden maple woodgrain 3D laminate A	+$0
122	brown walnut woodgrain 3D laminate A	+$0
123	chocolate walnut woodgrain 3D laminate A	+$0
124	warm cherry woodgrain 3D laminate A	+$0
125	light teak woodgrain 3D laminate A	+$10
126	basic white 3D laminate A	+$0

Above-Sink Tile, ADA-Compliant Sink TW129.

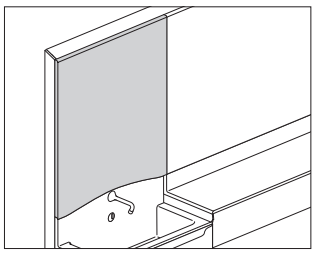

Product Information

Description

This Sink Tile attaches to two Rail-Attached Stiles, ordered separately. It has shingled, creating a flush join between tiles that prevents liquids from seeping through.

Dimensions

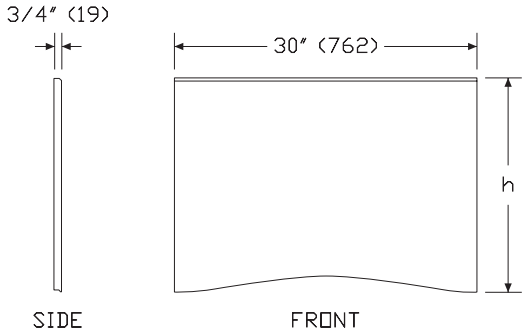

Specification Information

Step 1.

TW129.

Step 2. Height

20	20" high
40	40" high

Step 3. Width

30	30" wide

Step 4. Surface Material

For 20" high (20)

A	durawrap™ 3D laminate
K	corian
P	3D laminate A

For 40" high (40)

A	durawrap™ 3D laminate
P	3D laminate A

Prices for Steps 1-4.

		A	K	P
TW129. 20 30		$246	728	225
	40 30	$494	—	452

Step 5. Surface Finish

Solid-Color

For durawrap™ 3D laminate (A)

91	white	+$0
LU	soft white	+$0

Wood-Grain

For durawrap™ 3D laminate (A)

76	light brown walnut	+$10
HM	natural maple	+$10
HX	aged cherry	+$10
OG	honey maple	+$10
PX	Nemschoff light cherry	+$10

Above-Sink Tile, ADA-Compliant Sink *continued*

For corian (K)		
1N	canyon	+$50
CQ	glacier white	+$0
QB	bisque	+$0
1E	flint	+$120
1S	savannah	+$50
1U	sahara	+$50
3I	mojave	+$50
4I	sandstone	+$50
58	cameo white	+$0
IQ	aurora	+$50
OQ	silt	+$50
Q1	vanilla	+$0
7I	raffia	+$120
BLP	blue pebble	+$120

For 3D laminate (P)		
120	light maple woodgrain 3D laminate A	+$0
121	golden maple woodgrain 3D laminate A	+$0
122	brown walnut woodgrain 3D laminate A	+$0
123	chocolate walnut woodgrain 3D laminate A	+$0
124	warm cherry woodgrain 3D laminate A	+$0
125	light teak woodgrain 3D laminate A	+$10
126	basic white 3D laminate A	+$0

Linen Cart Tile TW130.

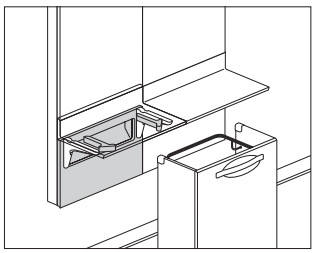

Product Information

Description

This tile attaches to 2 rail-attached stiles below a work surface to provide a docking area for a linen cart. It includes 2 guides that attach to the work surface support brackets to help align the cart in its stored position. The top and bottom edges are ship lapped (shingled); creating a flush joint between tiles that prevents liquids from seeping back.

Notes

Order cantilever (TW219.) separately. Linen cart guides will attach to work surface support brackets.

Dimensions

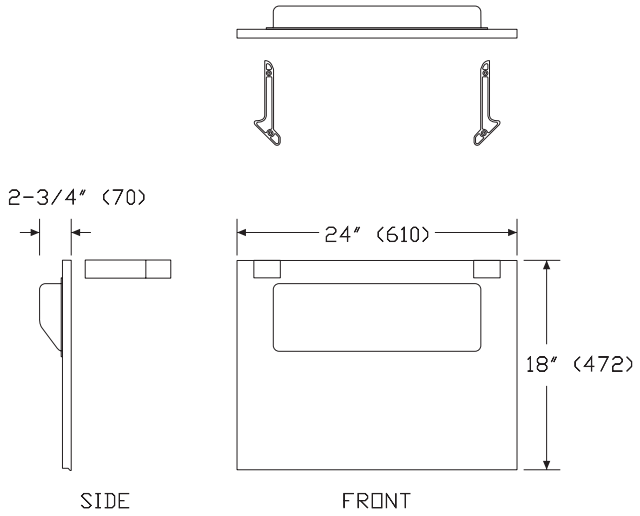

Specification Information

Step 1.

TW130.

Step 2. Work Surface Type

BW	work surface with backsplash
CN	work surface without backsplash

Step 3. Surface Material

A	durawrap™ 3D laminate
P	3D laminate [A]

Prices for Steps 1-3.

		A	P
TW130.	**BW**	$392	371
	CN	$451	428

Step 4. Surface Finish

Solid-Color

For durawrap™ 3D laminate (A)

91	white	+$0
LU	soft white	+$0

Wood-Grain

For durawrap™ 3D laminate (A)

76	light brown walnut	+$10
HX	aged cherry	+$10
HM	natural maple	+$10
PX	Nemschoff light cherry	+$10
OG	honey maple	+$10

For 3D laminate (P)

120	light maple woodgrain 3D laminate [A]	+$0
121	golden maple woodgrain 3D laminate [A]	+$0
122	brown walnut woodgrain 3D laminate [A]	+$0
123	chocolate walnut woodgrain 3D laminate [A]	+$0
124	warm cherry woodgrain 3D laminate [A]	+$0
125	light teak woodgrain 3D laminate [A]	+$10
126	basic white 3D laminate [A]	+$0

Utility Tile, Electrical, Lower TW140.

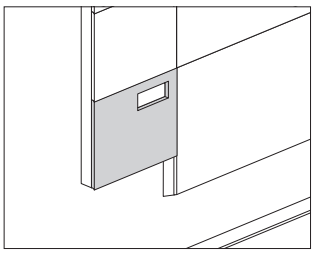

Product Information

Description

This tile attaches to 2 rail-attached stiles in the lowest position and has cutouts for various combinations of electrical access. The top and bottom edges are ship lapped (shingled); creating a flush joint between tiles that prevents liquids from seeping back. The tile has a 3D laminate surface. Durawrap™ 3D laminate is a 99.9% PVC-free material. Cutout trim plates are not included.

Notes

Tile attaches to the bottom position on stiles only.

Specify utility support rail (TW170.) separately for each row of cutouts in utility tile.

Specify electrical junction box attachment bracket (TW172.) for each individual cutout in utility tile.

Dimensions

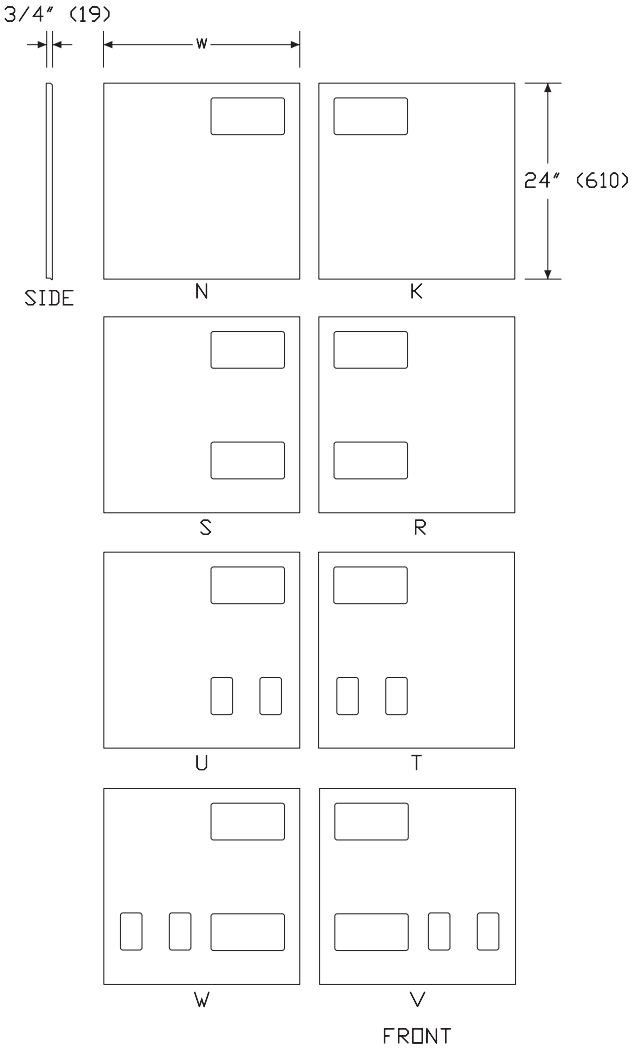

Utility Tile, Electrical, Lower

continued

Specification Information

Step 1.

TW140.

Step 2. Width

18	18″ wide
24	24″ wide
36	36″ wide
48	48″ wide

Step 3. Configuration

K	3-gang cutout left, row 3
N	3-gang cutout right, row 3
R	3-gang cutout left, row 3, 3-gang cutout left, row 1
S	3-gang cutout right, row 3, 3-gang cutout right, row 1
T	3-gang cutout left, row 3, 2 single cutouts left, row 1
U	3-gang cutout right, row 3, 2 single cutouts right, row 1
V	3-gang cutout left, row 3, 3-gang and 2 single cutouts left, row 1
W	3-gang cutout right, row 3, 3-gang and 2 single cutouts right, row 1

Step 4. Surface Material

A	durawrap™ 3D laminate
P	3D laminate A

Prices for Steps 1-4.

			A	P
TW140.	**18**	**K**	$172	157
		N	$172	157
		R	$184	166
		S	$184	166
		T	$196	176
		U	$196	176
		V	$208	188
		W	$208	188
	24	**K**	$203	188
		N	$203	188
		R	$217	197
		S	$217	197
		T	$229	208
		U	$229	208
		V	$241	221
		W	$241	221
	36	**K**	$241	221
		N	$241	221
		R	$253	232
		S	$253	232
		T	$263	242
		U	$263	242
		V	$277	253
		W	$277	253
	48	**K**	$311	285
		N	$311	285
		R	$324	297
		S	$324	297
		T	$336	307
		U	$336	307
		V	$348	318
		W	$348	318

Step 5. Surface Finish

Solid-Color

For durawrap™ 3D laminate (A)

91	white	+$0
LU	soft white	+$0

Wood-Grain

For durawrap™ 3D laminate (A)

HX	aged cherry	+$10
HM	natural maple	+$10
76	light brown walnut	+$10
PX	Nemschoff light cherry	+$10
OG	honey maple	+$10

For 3D laminate (P)

120	light maple woodgrain 3D laminate A	+$0
121	golden maple woodgrain 3D laminate A	+$0
122	brown walnut woodgrain 3D laminate A	+$0
123	chocolate walnut woodgrain 3D laminate A	+$0
124	warm cherry woodgrain 3D laminate A	+$0
125	light teak woodgrain 3D laminate A	+$10
126	basic white 3D laminate A	+$0

Utility Tile, Electrical, Partial-Height Upper

TW141.

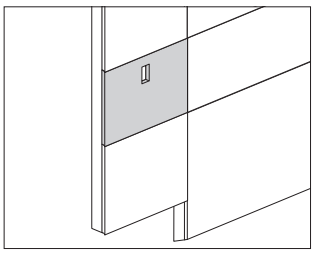

Product Information

Description

This tile attaches to 2 rail-attached stiles in the middle or upper position and has cutouts for various combinations of electrical access. It can also be used for mounting a flat panel television or monitor. The top and bottom edges are ship lapped (shingled); creating a flush joint between tiles that prevents liquids from seeping back. The tile has a 3D laminate surface. Durawrap™ 3D laminate is a 99.9% PVC-free material. Cutout trim plates are not included.

Notes

Tile will not attach in the bottom tile position.

When mounting a flat panel television or monitor, specify tv/monitor support bracket (TW175.) separately.

When mounting a flat panel television or monitor, specify tile with one of the following options:

- Single cutout center, row 3 option (A)
- 2 single cutouts center, row 3 option (B)
- 3 single cutouts center, row 3 option (C)

Specify utility support rail (TW170.) separately for each row of cutouts in utility tile.

Specify electrical junction box attachment bracket (TW172.) for each individual cutout in utility tile.

Dimensions

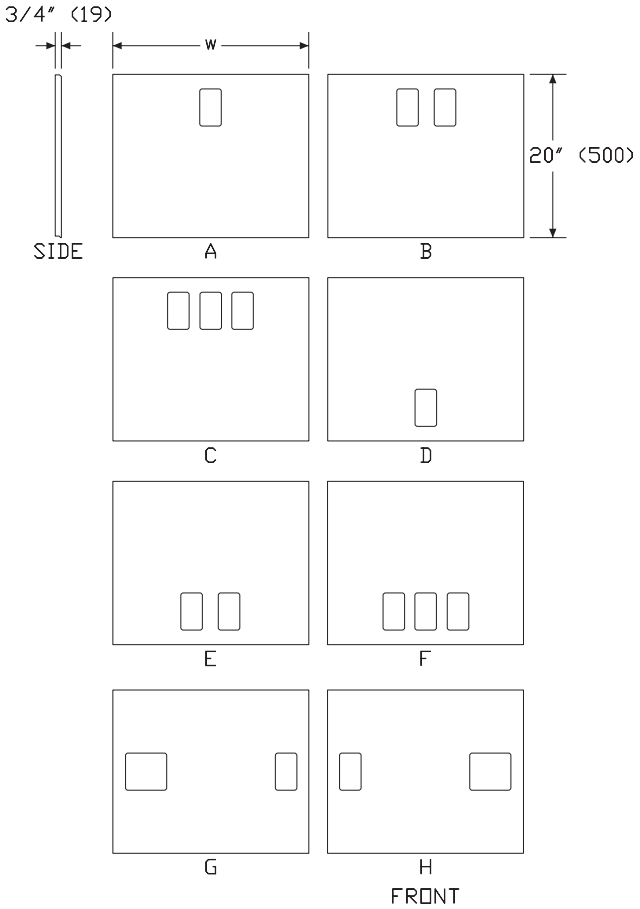

Specification Information

Step 1.

TW141.

Step 2. Width

18	18" wide
24	24" wide
36	36" wide
48	48" wide

Step 3. Tile Position

M	middle tile position
T	top tile position

Step 4. Configuration

For 18" wide (18), 24" wide (24), or 36" wide (36) with middle tile position (M)

A	single cutout center, row 3
B	2 single cutouts center, row 3
C	3 single cutouts center, row 3
D	single cutout center, row 1
E	2 single cutouts center, row 1
F	3 single cutouts center, row 1

For 18" wide (18), 24" wide (24), or 36" wide (36) with top tile position (T)

A	single cutout center, row 3
B	2 single cutouts center, row 3
C	3 single cutouts center, row 3

For 48" wide (48) with middle tile position (M) or top tile position (T)

A	single cutout center, row 3
B	2 single cutouts center, row 3
C	3 single cutouts center, row 3
G	3-gang cutout left, row 2, single cutout right, row 2
H	single cutout left, row 2, 3-gang cutout right, row 2

Step 5. Surface Material

A	durawrap™ 3D laminate
P	3D laminate [A]

Prices for Steps 1-5.

		AA	AP	BA	BP	CA	CP
TW141. 18	**M**	$156	139	167	151	179	162
	T	$156	139	167	151	179	162
24	**M**	$187	171	198	182	211	193
	T	$187	171	198	182	211	193
36	**M**	$235	215	247	227	258	238
	T	$235	215	247	227	258	238
48	**M**	$306	280	318	291	331	302
	T	$306	280	318	291	331	302

		DA	DP	EA	EP	FA	FP
TW141. 18	**M**	$202	182	216	194	227	204
24	**M**	$187	171	198	182	211	193
36	**M**	$235	215	247	227	258	238

		GA	GP	HA	HP
TW141. 48	**M**	$318	291	318	291
	T	$318	291	318	291

Step 6. Surface Finish

Solid-Color

For durawrap™ 3D laminate (A)

91	white	+$0
LU	soft white	+$0

Wood-Grain

For durawrap™ 3D laminate (A)

HX	aged cherry	+$10
HM	natural maple	+$10
76	light brown walnut	+$10
PX	Nemschoff light cherry	+$10
OG	honey maple	+$10

For 3D laminate (P)

120	light maple woodgrain 3D laminate [A]	+$0
121	golden maple woodgrain 3D laminate [A]	+$0
122	brown walnut woodgrain 3D laminate [A]	+$0
123	chocolate walnut woodgrain 3D laminate [A]	+$0
124	warm cherry woodgrain 3D laminate [A]	+$0
125	light teak woodgrain 3D laminate [A]	+$10
126	basic white 3D laminate [A]	+$0

Utility Tile, Electrical, Full-Height Upper TW142.

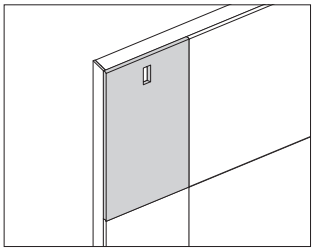

Product Information

Description

This tile attaches to 2 rail-attached stiles in the middle and upper tile positions and has cutouts for various combinations of electrical access. The top and bottom edges are ship lapped (shingled); creating a flush joint between tiles that prevents liquids from seeping back. The tile has a 3D laminate surface. Durawrap™ 3D laminate is a 99.9% PVC-free material. Cutout trim plates are not included.

Notes

Tile will not attach in the bottom tile position.

Specify utility support rail (TW170.) separately for each row of cutouts in utility tile.

Specify electrical junction box attachment bracket (TW172.) for each individual cutout in utility tile.

Dimensions

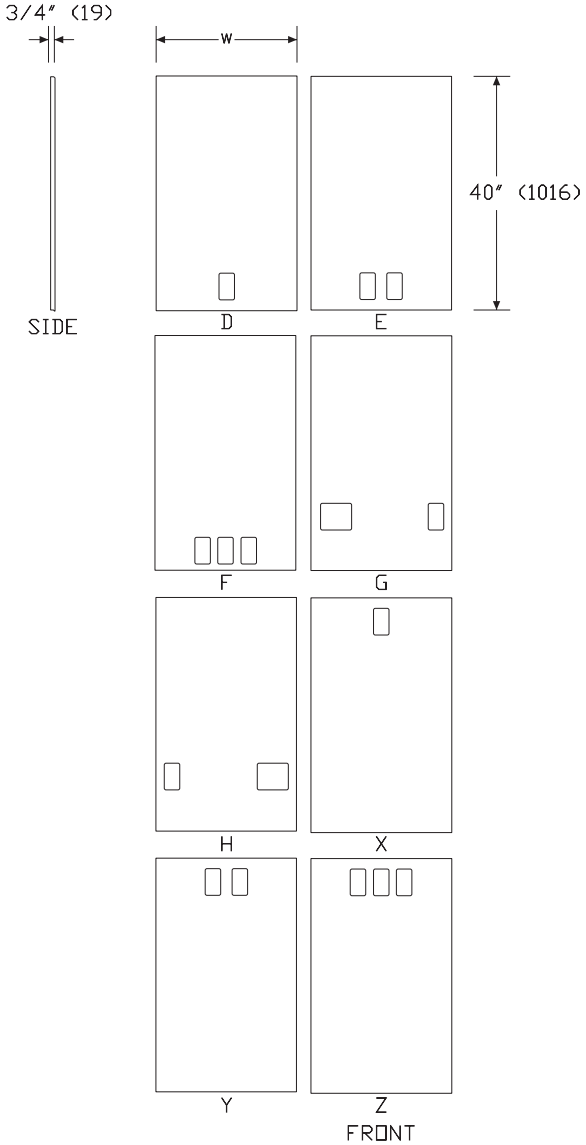

Specification Information

Step 1.

TW142.

Step 2. Width

18	18" wide
24	24" wide
36	36" wide
48	48" wide

Step 3. Configuration

For 18" wide (18), 24" wide (24), or 36" wide (36)

D	single cutout center, row 1
E	2 single cutouts center, row 1
F	3 single cutouts center, row 1
X	single cutout center, row 5
Y	2 single cutouts center, row 5
Z	3 single cutouts center, row 5

For 48" wide (48)

G	3-gang cutout left, row 2, single cutout right, row 2
H	single cutout left, row 2, 3-gang cutout right, row 2
X	single cutout center, row 5
Y	2 single cutouts center, row 5
Z	3 single cutouts center, row 5

Step 4. Surface Material

A	durawrap™ 3D laminate
P	3D laminate A

Prices for Steps 1-4.

			A	P
TW142.	**18**	**D**	$254	228
		E	$267	239
		F	$243	218
		X	$254	228
		Y	$267	239
		Z	$328	293
	24	**D**	$306	280
		E	$318	291
		F	$331	302
		X	$306	280
		Y	$318	291
		Z	$331	302
	36	**D**	$391	358
		E	$401	367
		F	$414	378
		X	$391	358
		Y	$401	367
		Z	$414	378
	48	**G**	$467	428
		H	$467	428
		X	$455	416
		Y	$467	428
		Z	$478	438

Step 5. Surface Finish

Solid-Color

For durawrap™ 3D laminate (A)

91	white	+$0
LU	soft white	+$0

Wood-Grain

For durawrap™ 3D laminate (A)

HX	aged cherry	+$10
HM	natural maple	+$10
76	light brown walnut	+$10
PX	Nemschoff light cherry	+$10
OG	honey maple	+$10

For 3D laminate (P)

120	light maple woodgrain 3D laminate A	+$0
121	golden maple woodgrain 3D laminate A	+$0
122	brown walnut woodgrain 3D laminate A	+$0
123	chocolate walnut woodgrain 3D laminate A	+$0
124	warm cherry woodgrain 3D laminate A	+$0
125	light teak woodgrain 3D laminate A	+$10
126	basic white 3D laminate A	+$0

Utility Tile, Light TW155.

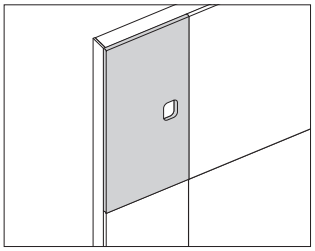

Product Information

Description

The Light Tile attaches to two Rail-Attached Stiles, ordered separately. It has shingled edges to allow for liquids to more easily roll off. The mounting location always falls on the second from top location. An above bed tile (36 or 48) will have the opening in the top first position mounting an above bed light.

Dimensions

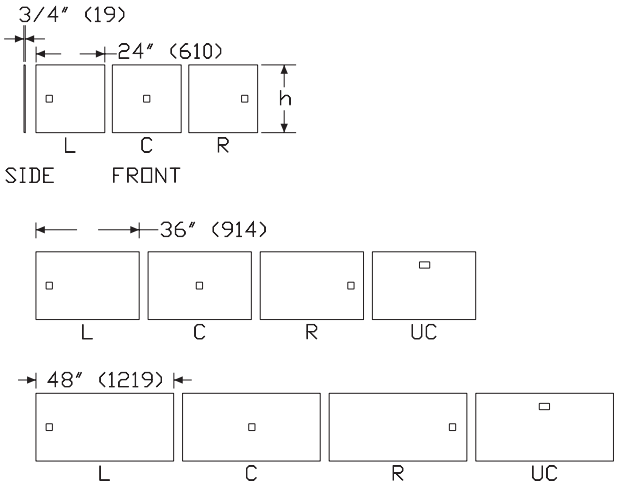

Specification Information

Step 1.

TW155.

Step 2. Height

20 20" high
40 40" high

Step 3. Width

24 24" wide
36 36" wide
48 48" wide

Step 4. Configuration

For 24" wide (24)

L cutout left
C cutout center
R cutout right

For 36" wide (36) or 48" wide (48)

L cutout left
C cutout center
R cutout right
UC upper center (above bed light application)

Step 5. Surface Material

For 20" high (20)

A durawrap™ 3D laminate
K corian
P 3D laminate A

For 40" high (40)

A durawrap™ 3D laminate
P 3D laminate A

Prices for Steps 1-5.

		LA	LK	LP	CA	CK	CP
TW155.	**20 24**	$198	203	182	198	203	182
	36	$247	253	227	247	253	227
	48	$318	328	291	318	328	291
	40 24	$318	—	291	318	—	291
	36	$401	—	367	401	—	367
	48	$467	—	428	467	—	428

		RA	RK	RP	UCA	UCK	UCP
TW155.20	**24**	$198	203	182	—	—	—
	36	$247	253	227	247	253	227
	48	$318	328	291	318	328	291
40	**24**	$318	—	291	—	—	—
	36	$401	—	367	401	—	367
	48	$467	—	428	467	—	428

Step 6. Surface Finish

Solid-Color

For durawrap™ 3D laminate (A)

91	white	+$0
LU	soft white	+$0

Wood-Grain

For durawrap™ 3D laminate (A)

76	light brown walnut	+$10
HM	natural maple	+$10
HX	aged cherry	+$10
OG	honey maple	+$10
PX	Nemschoff light cherry	+$10

For corian (K)

1N	canyon	+$50
CQ	glacier white	+$0
QB	bisque	+$0
1E	flint	+$120
1S	savannah	+$50
1U	sahara	+$50
3I	mojave	+$50
4I	sandstone	+$50
58	cameo white	+$0
IQ	aurora	+$50
OQ	silt	+$50
Q1	vanilla	+$0
7I	raffia	+$120
BLP	blue pebble	+$120

For 3D laminate (P)

120	light maple woodgrain 3D laminate A	+$0
121	golden maple woodgrain 3D laminate A	+$0
122	brown walnut woodgrain 3D laminate A	+$0
123	chocolate walnut woodgrain 3D laminate A	+$0
124	warm cherry woodgrain 3D laminate A	+$0
125	light teak woodgrain 3D laminate A	+$10
126	basic white 3D laminate A	+$0

Sconce Light Trim Plate TW156.

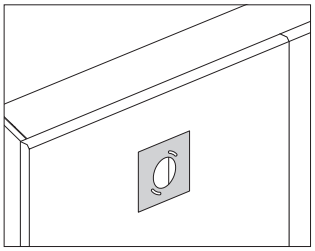

Product Information

Description

This trim plate is mounted to a junction box to fill the gap between the cutout of the tile and the sconce when mounting lights to the light tiles. Finish is metallic silver.

Notes

Attaches to field supplied j-box.

Specify the following products separately:

- Utility Tile, Light (TW155.)

Dimensions

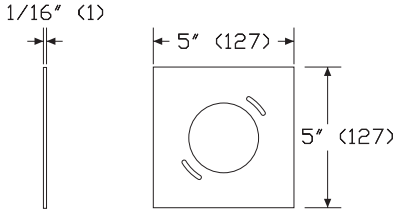

Specification Information

Step 1.

TW156. $31

Nurse Call Trim Plate TW159.

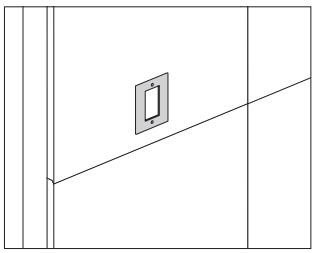

Product Information

Description

This plate attaches to a utility tile to fill the gap between the cutout and a junction box trim plate when housing a device such as 37-pin connector plug, 3- or 4-gang nurse call button, code blue button, or staff assist button. Finish is metallic silver.

Notes

Nurse call trim plate works in conjunction with field-supplied junction box trim plate.

Dimensions

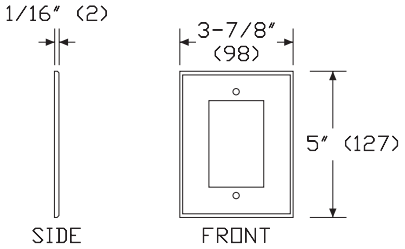

Specification Information

Step 1.

TW159.

Step 2. Type

A	single
B	double
C	triple
D	quadruple

Prices for Steps 1-2.

TW159.	**A**	$31
	B	$31
	C	$31
	D	$31

Utility Support Rail TW170.

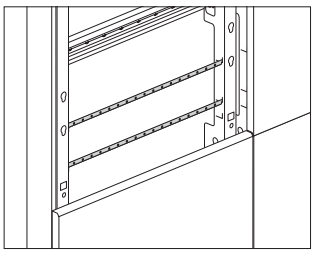

Product Information

Description

This dual rail mounts between 2 rail-attached stiles to provide attachment for electrical junction box and gas outlet attachment brackets. Package of 2 rails supports 1 row of utilities within a utility tile. Stile attachment screws included.

Notes

Specify the following products separately:

- Electrical junction box attachment bracket (TW172.)

Dimensions

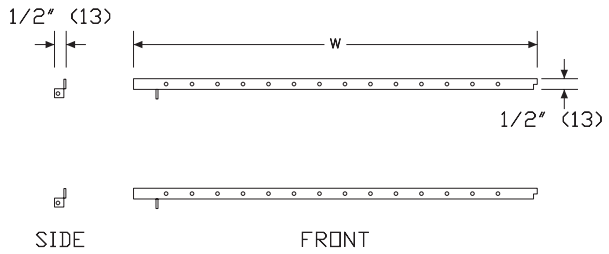

Specification Information

Step 1.

TW170.

Step 2. Width

18	18" wide
24	24" wide
36	36" wide
48	48" wide

Prices for Steps 1-2.

TW170.	**18**	$18
	24	$22
	36	$33
	48	$41

Sconce Light Junction Box Attachment Bracket TW171.

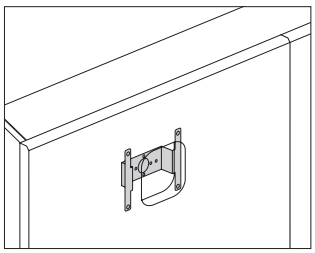

Product Information

Description

This bracket is used when mounting lights to the light tiles. It supports the field supplied j-box for mounting a sconce light.

Notes

Attaches to field supplied j-box.

Specify the following products separately:

- Utility Support Rail (TW170)
- Light Tile (TW155)

Dimensions

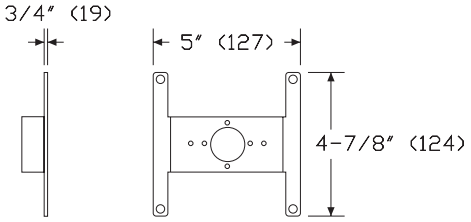

Specification Information

Step 1.

TW171. $34

Electrical Junction Box Attachment Bracket TW172.

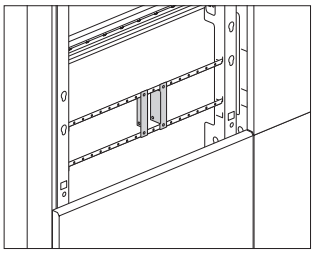

Product Information

Description

This set of L-brackets attaches to a utility support rail to support a 1-, 2-, 3-, or 4-gang electrical junction box within a utility tile. It can be specified with or without junction boxes. Rail attachment screws included.

Notes

Specify utility support rail (TW170.) separately.

Specify no junction box option (N) when junction box will be supplied in the field.

Dimensions

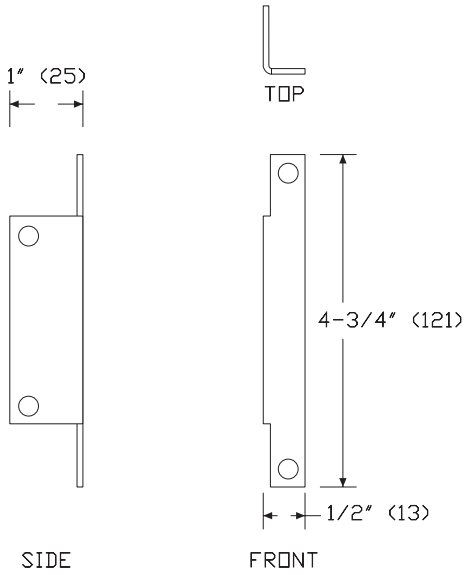

Specification Information

Step 1.

TW172.

Step 2. Quantity

1	pkg of 2 for 1 junction box
2	pkg of 12 for 6 junction boxes
3	pkg of 60 for 30 junction boxes

Prices for Steps 1-2.

TW172.	**1**	$18
	2	$95
	3	$467

Step 3. Junction Box Type

		1	2	3
N	no junction box	+$0	0	0
A	1-gang junction box(es)	+$10	57	284
B	2-gang junction box(es)	+$16	95	473
C	3-gang junction box(es)	+$21	126	630
D	4-gang junction box(es)	+$29	170	851

Electrical 4x4 Junction Box Attachment Bracket TW174.

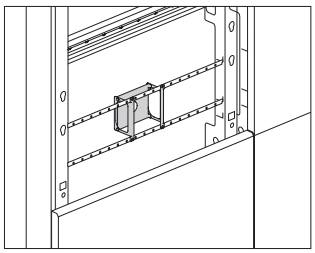

Product Information

Description

This bracket attaches 1 4x4 junction box to a utility support rail. It can be used with 3/4″ or 1″ conduit alignment. Package contains 2 brackets. Rail attachment screws included.

Notes

Specify utility support rail (TW170.) separately.

Offers adjustment for 3/4″ or 1″ conduit alignment.

Shipped in 3/4″ conduit alignment.

Dimensions

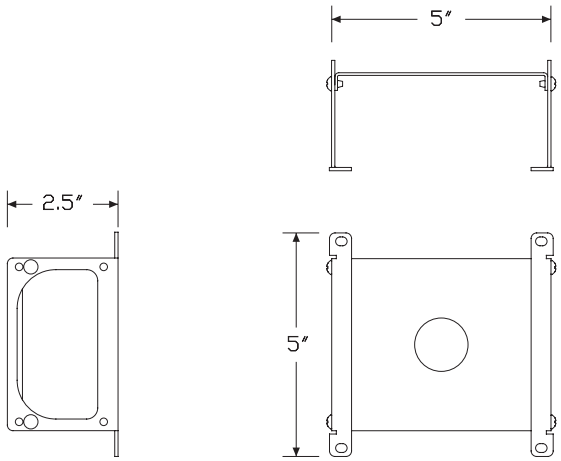

Specification Information

Step 1.

TW174.

Step 2. Quantity

1 pkg for ONE 4x4 junction box

Prices for Steps 1-2.

TW174. 1	$76

TV/Monitor Support Bracket TW175.

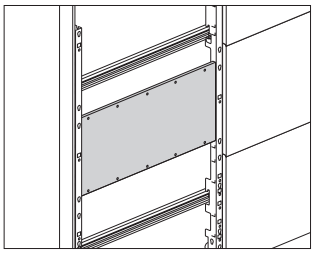

Product Information

Description

This bracket attaches between 2 rail-attached stiles to provide support when mounting a flat panel television or monitor to a utility tile.

Notes

Specify utility tile, electrical, partial-height upper (TW141.) separately.

Dimensions

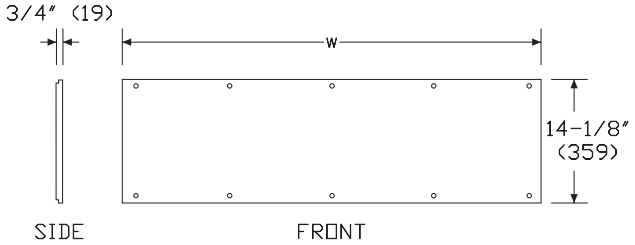

Specification Information

Step 1.

TW175.

Step 2. Width

36	36″ wide
48	48″ wide

Prices for Steps 1-2.

TW175.	**36**	$98
	48	$114

1" Conduit Electrical Junction Box TW176.

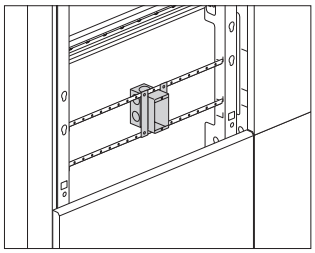

Product Information

Description

This conduit junction box allows up to 4 Category 6a and other large volume cables to be brought in behind the compass structure without disrupting utility rails, tiles, or other components. This is designed for flexible conduit only.

Notes

Conduit access hole is either top or bottom only, not both.

Specify utility support rail (TW170.) separately.

Dimensions

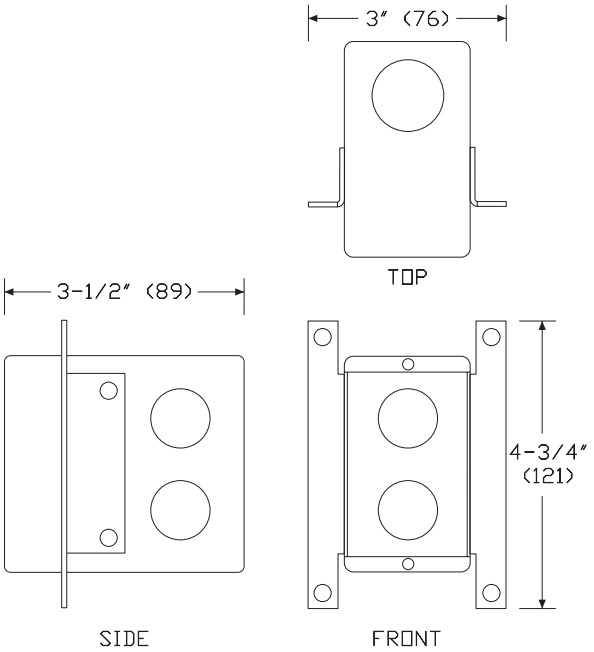

Specification Information

Step 1.

TW176.

Step 2. Quantity

1	pkg for 1 junction box
2	pkg for 6 junction boxes
3	pkg for 30 junction boxes

Prices for Steps 1-2.

TW176.	**1**	$48
	2	$268
	3	$1337

Chase TW180.

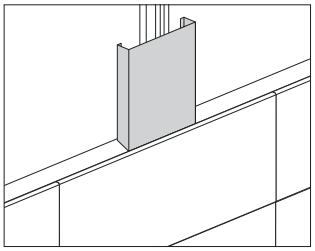

Product Information

Description

This chase attaches to an architectural wall to hide gas and electrical utilities routed from the ceiling. It can be painted in the field. Attachment hardware included.

Notes

Chase is designed to be used with 64"-high stiles in rooms with a ceiling height between 8'6" and 9' high. For other chase sizes, contact Options.

Chase accommodates up to 9 1" cables or lines with 1" space between.

Dimensions

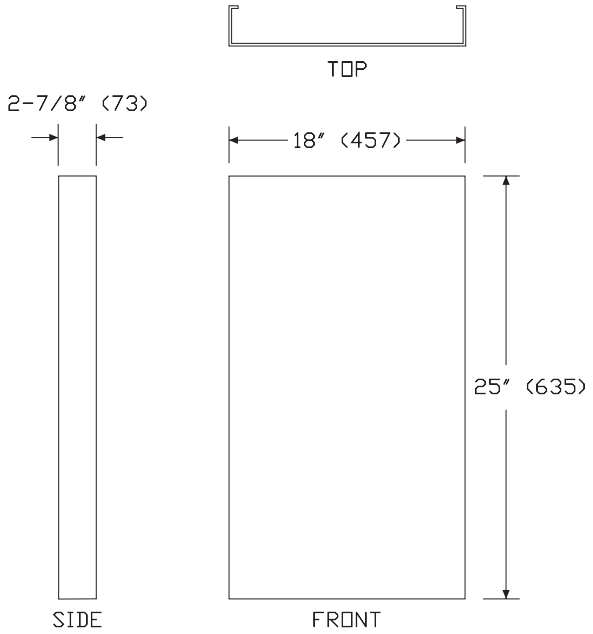

Specification Information

Step 1.

TW180.	$191

Chase Tile TW182.

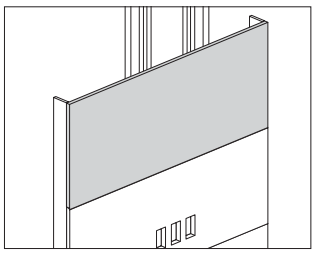

Product Information

Description

This tile attaches to chase tile stiles to hide gas and electrical utilities routed from the ceiling. It has a 3D laminate surface. Durawrap™ 3D laminate is a 99.9% PVC-free material.

Notes

Specify stile, chase tile (TW114.) separately.

Chase tile is designed to be used with 64″-high stiles in rooms with a ceiling height between 8′6″ and 9′ high. For other chase sizes, contact Options.

Dimensions

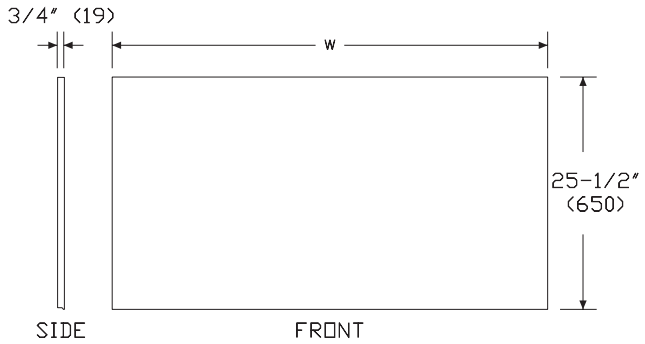

Specification Information

Step 1.

TW182.

Step 2. Width

24	24″ wide
36	36″ wide
48	48″ wide

Step 3. Surface Material

A	durawrap™ 3D laminate
P	3D laminate A

Prices for Steps 1-3.

		A	P
TW182.	**24**	$320	292
	36	$349	318
	48	$367	335

Step 4. Surface Finish

Solid-Color

For durawrap™ 3D laminate (A)

91	white	+$0
LU	soft white	+$0

Wood-Grain

For durawrap™ 3D laminate (A)

76	light brown walnut	+$10
HX	aged cherry	+$10
HM	natural maple	+$10
PX	Nemschoff light cherry	+$10
OG	honey maple	+$10

For 3D laminate (P)

120	light maple woodgrain 3D laminate A	+$0
121	golden maple woodgrain 3D laminate A	+$0
122	brown walnut woodgrain 3D laminate A	+$0
123	chocolate walnut woodgrain 3D laminate A	+$0
124	warm cherry woodgrain 3D laminate A	+$0
125	light teak woodgrain 3D laminate A	+$10
126	basic white 3D laminate A	+$0

Work Surface

TW210.
TW211.

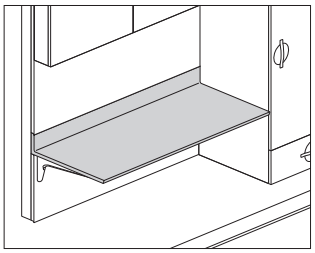

Product Information

Description

This work surface attaches to a work surface tile and is available in 3D laminate or Corian®. Durawrap™ 3D laminate is a 99.9% PVC-free material. It can be specified with an integrated backsplash or without and can mount on cantilevers, a drawer module, or a combination of both.

Notes

A surface up to 48" wide requires 2 supports. 54" wide and wider surfaces require 3 supports.

Specify the following products separately:

- Cantilever (TW219.)
- Drawer Module (TW310.)
- Work surface tile (TW124.)

Dimensions

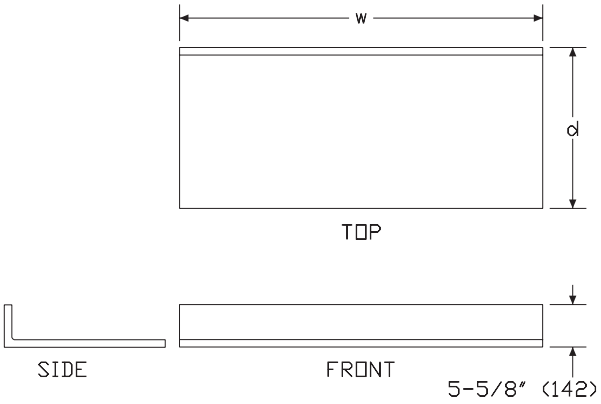

Specification Information

Step 1.

TW21

Step 2. Backsplash

0.	with backsplash
1.	without backsplash

Step 3. Depth

13	13" deep
21	21" deep

Step 4. Width

12	12" wide
18	18" wide
24	24" wide
30	30" wide
36	36" wide
42	42" wide
48	48" wide
54	54" wide
60	60" wide
66	66" wide
72	72" wide

Step 5. Surface Material

For with backsplash (0.)

A	durawrap™ 3D laminate
K	corian

For without backsplash (1.)

A	durawrap™ 3D laminate
K	corian
P	3D laminate A

Prices for Steps 1-5.

		A	K	P
TW210.13	**12**	$428	471	—
	18	$474	519	—
	24	$519	568	—
	30	$579	663	—
	36	$642	793	—
	42	$733	903	—
	48	$823	1013	—
	54	$909	1122	—
	60	$993	1233	—
	66	$1079	1343	—
	72	$1164	1453	—
21	**12**	$500	544	—
	18	$577	636	—
	24	$654	727	—
	30	$745	911	—
	36	$835	1097	—
	42	$1049	1210	—
	48	$1261	1322	—
	54	$1292	1511	—
	60	$1322	1698	—
	66	$1351	1879	—
	72	$1382	2061	—

		A	K	P
TW211.13	**12**	$203	405	187
	18	$211	424	193
	24	$218	442	198
	30	$294	465	268
	36	$306	608	279
	42	$332	686	303
	48	$358	763	326
	54	$382	844	348
	60	$407	925	372
	66	$440	1009	401
	72	$471	1091	431
21	**12**	$231	430	209
	18	$251	513	229
	24	$270	596	247
	30	$321	766	293
	36	$358	905	333
	42	$382	996	352
	48	$407	1085	372
	54	$434	1239	395
	60	$459	1394	418
	66	$490	1548	448
	72	$522	1704	476

Step 6. Surface Finish

Solid-Color

For with backsplash (0.) or without backsplash (1.) with durawrap™ 3D laminate (A)

91	white	+$0
LU	soft white	+$0

Wood-Grain

For without backsplash (1.) with durawrap™ 3D laminate (A)

76	light brown walnut	+$10
HM	natural maple	+$10
HX	aged cherry	+$10
OG	honey maple	+$10
PX	Nemschoff light cherry	+$10

For corian (K)

1N	canyon	+$50
CQ	glacier white	+$0
QB	bisque	+$0
1E	flint	+$120
1S	savannah	+$50
1U	sahara	+$50
3I	mojave	+$50
4I	sandstone	+$50
58	cameo white	+$0
IQ	aurora	+$50
OQ	silt	+$50
Q1	vanilla	+$0
7I	raffia	+$120
BLP	blue pebble	+$120

For without backsplash (1.) with 3D laminate (P)

126	basic white 3D laminate A	+$0

Cantilever TW219.

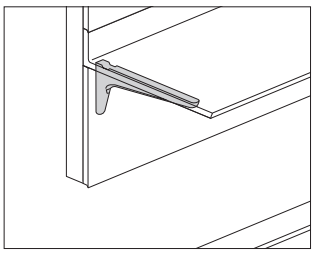

Product Information

Description

This single cantilever supports a work surface at either end, or in the middle. Finish is metallic silver.

Notes

Specify the following products separately:

- Work surface (TW210.)
- Work surface tile (TW124.)

Dimensions

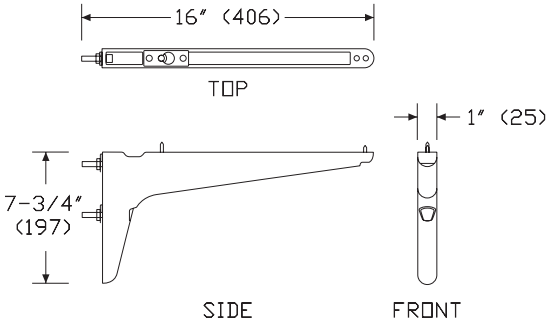

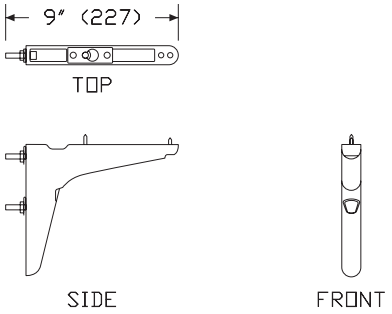

Specification Information

Step 1.

TW219.

Step 2. Depth

13	for 13" deep work surface
21	for 21" deep work surface

Prices for Steps 1-2.

TW219.	**13**	$66
	21	$82

Rotating Work Surface Support Bracket TW229.

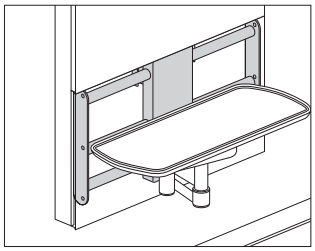

Product Information

Description

This support bracket attaches between 2 rail-attached stiles behind a rotating work surface tile to support a rotating work surface.

Notes

Specify the following products separately:

- Rotating work surface arm (TW221.)
- Rotating work surface top (TW222.)
- Rotating work surface tile (TW126.)

Dimensions

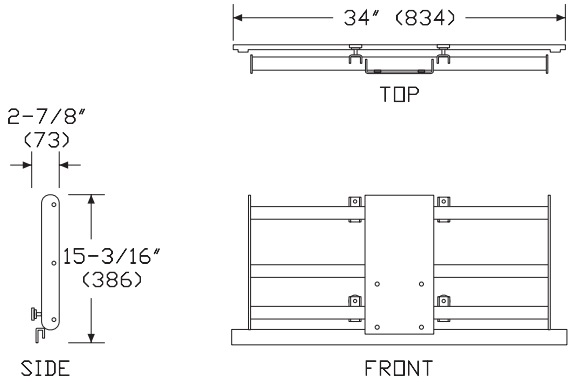

Specification Information

Step 1.

TW229.36	$189

Rotating Work Surface Arm TW221.

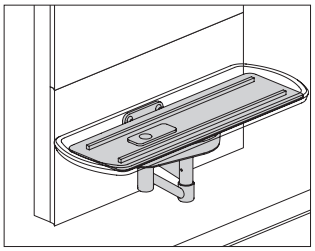

Product Information

Description

This arm attaches to a rotating work surface tile and accepts the rotating work surface top. The rotating arm finish is metallic silver.

Notes

Surface can be used in seated- or standing-height applications.

Specify the following products separately:

- Rotating work surface support bracket (TW229.)
- Rotating work surface tile (TW126.)
- Rotating work surface top (TW222.)

Dimensions

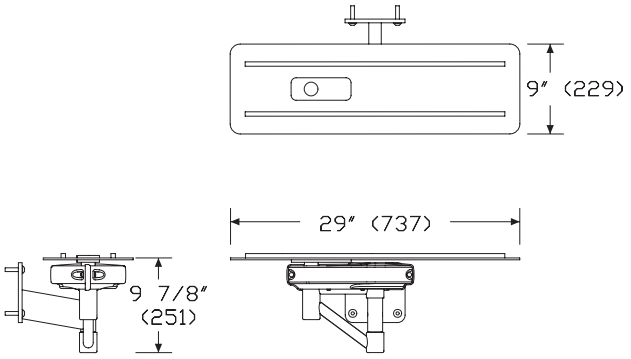

Specification Information

Step 1.

TW221.	$1843

Rotating Work Surface Top TW222.

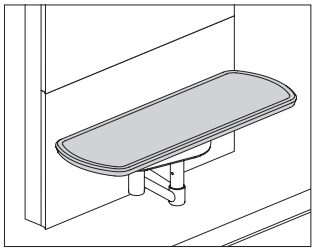

Product Information

Description

This extendable surface attaches to a rotating work surface arm and has a 3D laminate or Corian® finish. Durawrap™ 3D laminate is a 99.9% PVC-free material.

Notes

Surface can be used in seated- or standing-height applications.

Specify the following products separately:

- Rotating work surface support bracket (TW229.)
- Rotating work surface tile (TW126.)
- Rotating work surface arm (TW221.)

Dimensions

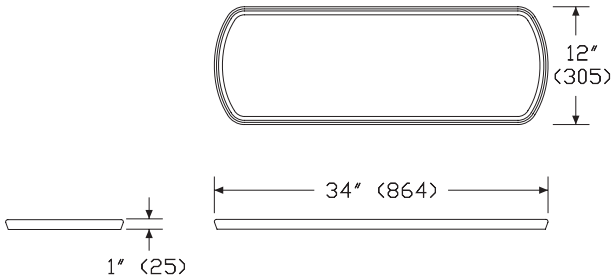

Specification Information

Step 1.

TW222.

Step 2. Surface Material

A	durawrap™ 3D laminate
K	corian
P	3D laminate A

Prices for Steps 1-2.

TW222.	**A**	$317
	K	$726
	P	$290

Step 3. Surface Finish

Solid-Color

For durawrap™ 3D laminate (A)

91	white	+$0
LU	soft white	+$0

Wood-Grain

For durawrap™ 3D laminate (A)

76	light brown walnut	+$10
HX	aged cherry	+$10
HM	natural maple	+$10
PX	Nemschoff light cherry	+$10
OG	honey maple	+$10

For corian (K)

1N	canyon	+$50
CQ	glacier white	+$0
QB	bisque	+$0
1E	flint	+$120
1S	savannah	+$50
1U	sahara	+$50
3I	mojave	+$50
4I	sandstone	+$50
58	cameo white	+$0
IQ	aurora	+$50
OQ	silt	+$50
Q1	vanilla	+$0
7I	raffia	+$120
BLP	blue pebble	+$120

For 3D laminate (P)

120	light maple woodgrain 3D laminate A	+$0
121	golden maple woodgrain 3D laminate A	+$0
122	brown walnut woodgrain 3D laminate A	+$0
123	chocolate walnut woodgrain 3D laminate A	+$0
124	warm cherry woodgrain 3D laminate A	+$0
125	light teak woodgrain 3D laminate A	+$10
126	basic white 3D laminate A	+$0

Sink, 13" Deep TW230.

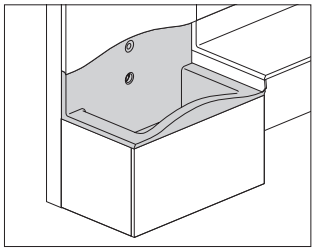

Product Information

Description

This Corian® sink attaches to 2 rail-attached stiles and has an integrated backsplash. The backsplash is curved and can be specified with holes to accept a faucet (TW239.). Drain assembly not included.

Notes

Sink does not have an overflow hole.

Specify the following products separately:

- Above sink tile (TW128.)
- Faucet (TW239.)
- Sink enclosure (TW232.)

Dimensions

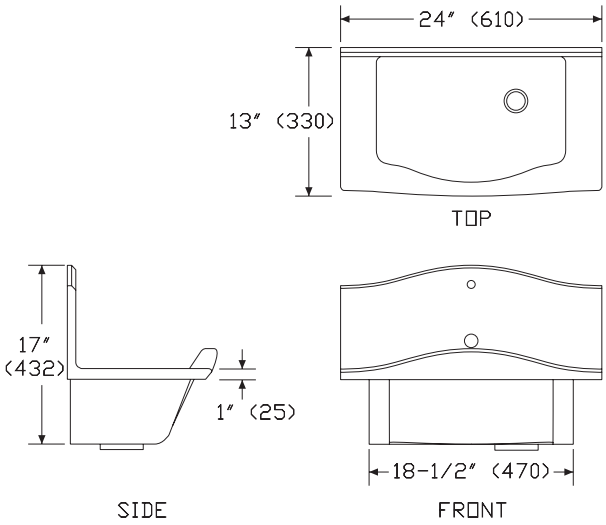

Specification Information

Step 1.

TW230.1324 A

Step 2. Type

H	faucet holes A	
N	no faucet holes A	

Prices for Steps 1-2.

TW230.1324	**H**	$2553
	N	$2527

Step 3. Surface Finish

1N	canyon A	+$180
CQ	glacier white A	+$0
QB	bisque A	+$0
1E	flint A	+$320
1S	savannah A	+$180
1U	sahara A	+$180
3I	mojave A	+$180
4I	sandstone A	+$180
58	cameo white A	+$0
IQ	aurora A	+$180
OQ	silt A	+$180
Q1	vanilla A	+$0
7I	raffia A	+$320
BLP	blue pebble A	+$320

Sink, 21" Deep TW231.

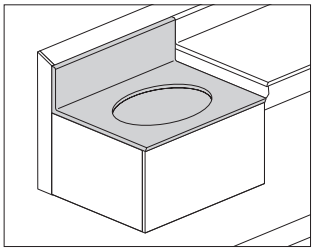

Product Information

Description

This Corian® sink attaches to 2 rail-attached stiles and has an integrated backsplash.

Notes

Specify sink enclosure (TW232.) separately.

Sink does not accept faucet (TW239.). Faucet must be field-supplied.

Dimensions

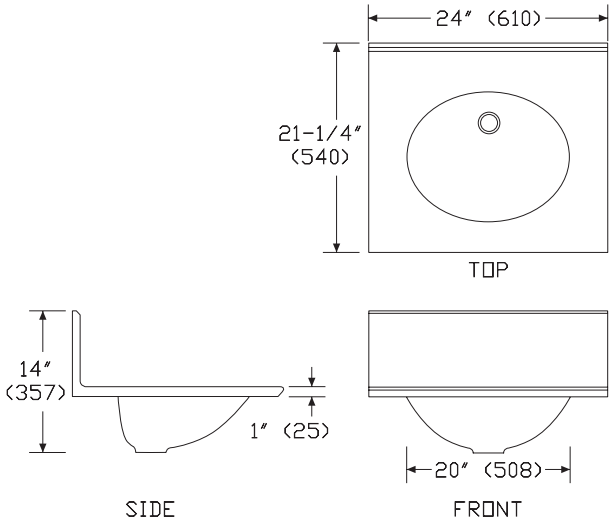

Specification Information

Step 1.

TW231.2124N A		$1451

Step 2. Sink Top Finish

1N	canyon A	+$60
CQ	glacier white A	+$0
QB	bisque A	+$0
1E	flint A	+$140
1S	savannah A	+$60
1U	sahara A	+$60
3I	mojave A	+$60
4I	sandstone A	+$60
58	cameo white A	+$0
IQ	aurora A	+$60
OQ	silt A	+$60
Q1	vanilla A	+$0
7I	raffia A	+$140
BLP	blue pebble A	+$140

Step 3. Sink Bowl Finish

CQ	glacier white A	+$0
QB	bisque A	+$0
58	cameo white A	+$0
Q1	vanilla A	+$0

Sink, ADA Compliant TW235.

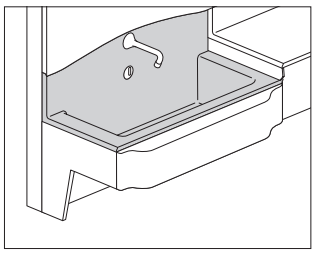

Product Information

Description

This ADA designed Corian sink attaches to 2 rail-attached stiles and has an integrated backsplash. The backslash can be specified with holes to accept a faucet (TW239). Drain assembly not included.

Notes

Sink does not have an overflow hole.

Specify the following products separately:

- Above sink tile (TW129)
- Faucet (TW239)

Dimensions

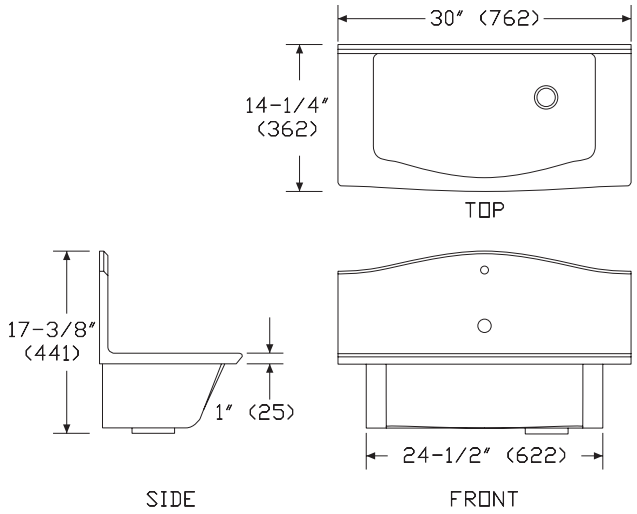

Specification Information

Step 1.

TW235.1330 A

Step 2. Type

H	faucet holes A	
N	no faucet holes A	

Prices for Steps 1-2.

TW235.1330	**H**	$3334
	N	$3096

Step 3. Surface Finish

1N	canyon A	+$210
CQ	glacier white A	+$0
QB	bisque A	+$0
1E	flint A	+$280
1S	savannah A	+$210
1U	sahara A	+$210
3I	mojave A	+$210
4I	sandstone A	+$210
58	cameo white A	+$0
IQ	aurora A	+$210
OQ	silt A	+$210
Q1	vanilla A	+$0
7I	raffia A	+$280
BLP	blue pebble A	+$280

Sink Enclosure TW232.

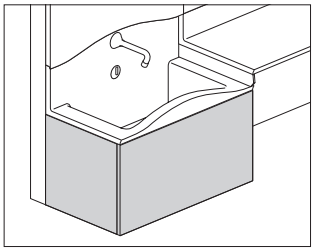

Product Information

Description

This enclosure attaches to a 13"- or 21"-deep sink to finish the area below the sink top and hide the plumbing. It has a 3D laminate surface. Durawrap™ 3D laminate is a 99.9% PVC-free material. Attachment hardware included.

Dimensions

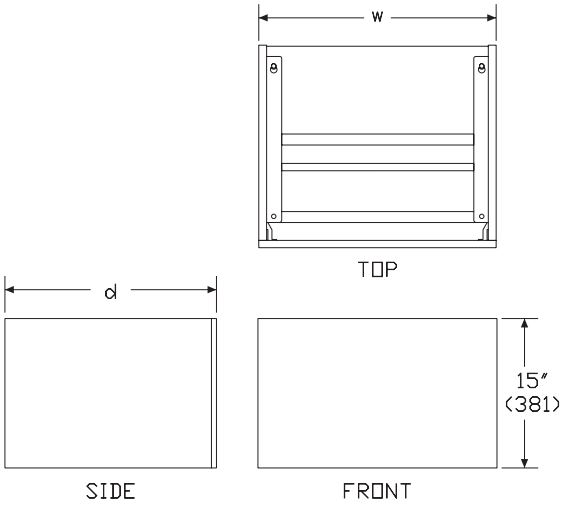

Specification Information

Step 1.

TW232.

Step 2. Depth

13	13" deep
21	21" deep

Step 3. Width

For 13" deep (13)

24	24" wide

For 21" deep (21)

24	24" wide

Step 4. Surface Material

A	durawrap™ 3D laminate
P	3D laminate A

Prices for Steps 1-4.

		A	P
TW232. 13 24		$627	573
	21 24	$882	805

Step 5. Side Finish

Solid-Color

For durawrap™ 3D laminate (A)

91	white	+$0
LU	soft white	+$0

Wood-Grain

For durawrap™ 3D laminate (A)

76	light brown walnut	+$10
HX	aged cherry	+$10
HM	natural maple	+$10
PX	Nemschoff light cherry	+$10
OG	honey maple	+$10

For 3D laminate (P)

120	light maple woodgrain 3D laminate A	+$0
121	golden maple woodgrain 3D laminate A	+$0
122	brown walnut woodgrain 3D laminate A	+$0
123	chocolate walnut woodgrain 3D laminate A	+$0
124	warm cherry woodgrain 3D laminate A	+$0
125	light teak woodgrain 3D laminate A	+$10
126	basic white 3D laminate A	+$0

Step 6. Front Finish

Solid-Color

For durawrap™ 3D laminate (A)

91	white	+$0
LU	soft white	+$0

Wood-Grain

For durawrap™ 3D laminate (A)

76	light brown walnut	+$10
HX	aged cherry	+$10
HM	natural maple	+$10
PX	Nemschoff light cherry	+$10
OG	honey maple	+$10

For 3D laminate (P)

120	light maple woodgrain 3D laminate A	+$0
121	golden maple woodgrain 3D laminate A	+$0
122	brown walnut woodgrain 3D laminate A	+$0
123	chocolate walnut woodgrain 3D laminate A	+$0
124	warm cherry woodgrain 3D laminate A	+$0
125	light teak woodgrain 3D laminate A	+$10
126	basic white 3D laminate A	+$0

Sink Enclosure, ADA-Compliant Sink TW233.

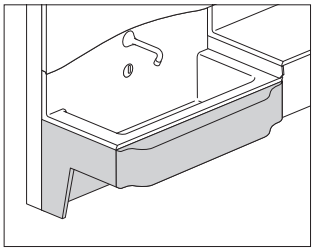

Product Information

Description

This enclosure attaches to an ADA sink to finish the area below the sink top and hide the plumbing. It has a 3D laminate surface. Durawrap™ 3D laminate is a 99.9% PVC-free material. Attachment hardware included.

Dimensions

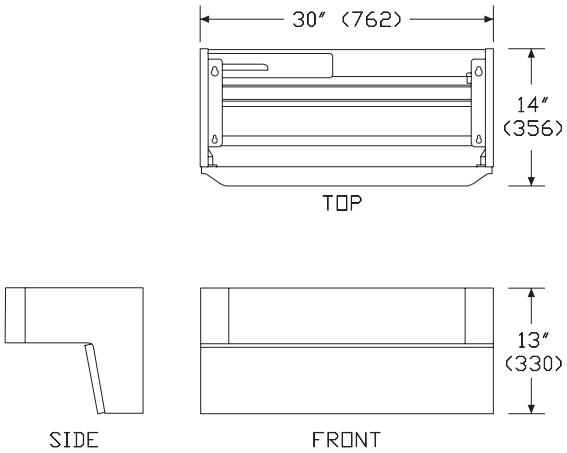

Specification Information

Step 1.

TW233.1330

Step 2. Surface Material

A	durawrap™ 3D laminate	
P	3D laminate A	

Prices for Steps 1-2.

TW233.1330	**A**	$796
	P	$727

Step 3. Side Finish

Solid-Color

For durawrap™ 3D laminate (A)

91	white	+$0
LU	soft white	+$0

Wood-Grain

For durawrap™ 3D laminate (A)

76	light brown walnut	+$10
HM	natural maple	+$10
HX	aged cherry	+$10
OG	honey maple	+$10
PX	Nemschoff light cherry	+$10

For 3D laminate (P)

120	light maple woodgrain 3D laminate A	+$0
121	golden maple woodgrain 3D laminate A	+$0
122	brown walnut woodgrain 3D laminate A	+$0
123	chocolate walnut woodgrain 3D laminate A	+$0
124	warm cherry woodgrain 3D laminate A	+$0
125	light teak woodgrain 3D laminate A	+$10
126	basic white 3D laminate A	+$0

Step 4. Front Finish

Solid-Color

For durawrap™ 3D laminate (A)

91	white	+$0
LU	soft white	+$0

Wood-Grain		
For durawrap™ 3D laminate (A)		
76	light brown walnut	+$15
HM	natural maple	+$15
HX	aged cherry	+$15
OG	honey maple	+$15
PX	Nemschoff light cherry	+$15

For 3D laminate (P)		
120	light maple woodgrain 3D laminate A	+$0
121	golden maple woodgrain 3D laminate A	+$0
122	brown walnut woodgrain 3D laminate A	+$0
123	chocolate walnut woodgrain 3D laminate A	+$0
124	warm cherry woodgrain 3D laminate A	+$0
125	light teak woodgrain 3D laminate A	+$15
126	basic white 3D laminate A	+$0

Faucet TW239.

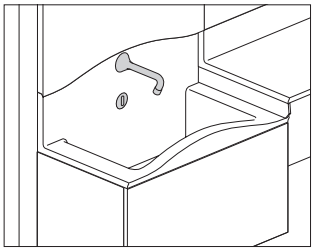

Product Information

Description

This faucet is designed to work with a 13″-deep sink and includes a hands-free sensor. Supply-line hoses, shutoff valves, mixing valve and drain hardware not included.

Notes

AC powered faucet sensor option (A) requires an electrical outlet to plug into. It is recommended that the outlet be located to fit inside the sink surround.

Hydro-powered faucet sensor option (B) is self charging and does not require an outlet.

Battery powered faucet sensor option (C) uses 4 AA batteries (included).

Dimensions

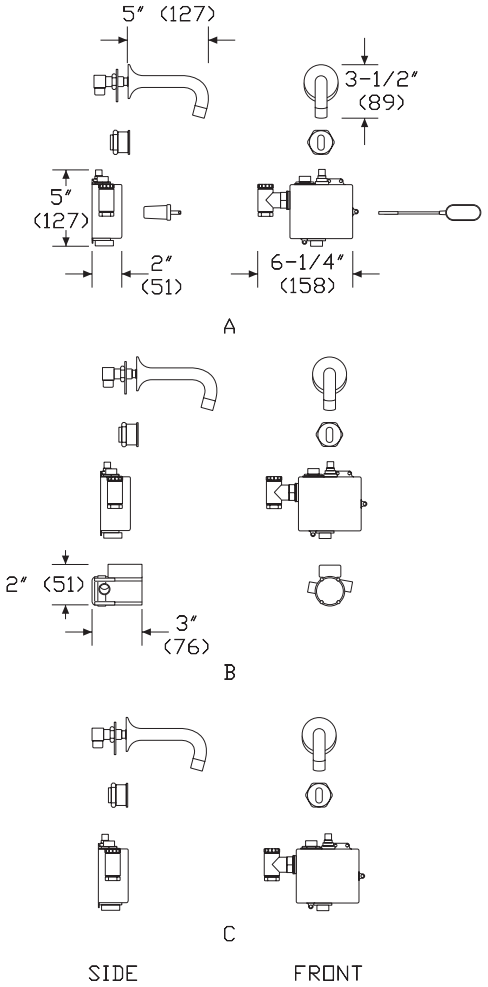

Specification Information
Step 1.
TW239.

Step 2. Faucet Sensor Type	
A	ac powered faucet sensor
B	hydro-powered faucet sensor
C	battery powered faucet sensor

Prices for Steps 1-2.		
TW239.	**A**	$1251
	B	$1450
	C	$1167

Sink, Basic 13" Deep TW234.

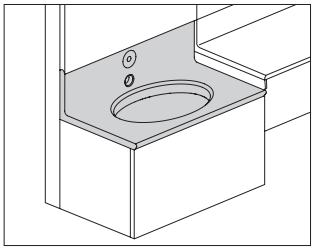

Product Information

Description

This Corian® sink attaches to 2 rail-attached stiles and has an integrated backsplash. It can be specified with holes to accept a faucet. Drain assembly not included.

Notes

Sink bowl is a Corian glacier white finish.

Sink does not have an overflow hole.

Specify the following products separately:

- Faucet (TW239.)
- Sink enclosure (TW232.)

Dimensions

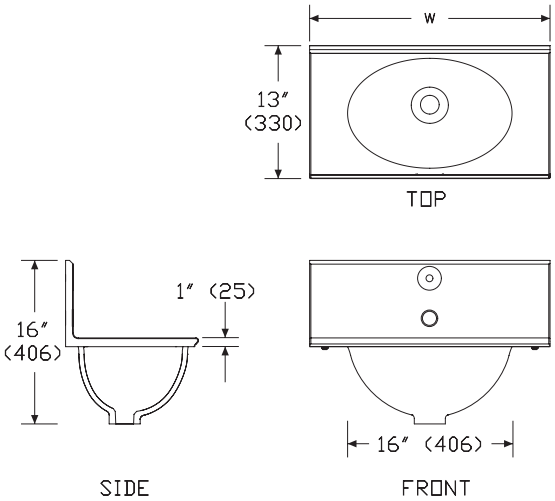

Specification Information

Step 1.

TW234.13 A

Step 2. Width

24	24″ wide A

Step 3. Type

H	faucet holes A
N	no faucet holes A

Prices for Steps 1-3.

		H	N
TW234.13	**24**	$1424	1371

Step 4. Sink Top Finish

1E	flint A	+$140
1N	canyon A	+$60
1S	savannah A	+$60
1U	sahara A	+$60
3I	mojave A	+$60
4I	sandstone A	+$60
58	cameo white A	+$0
7I	raffia A	+$140
BLP	blue pebble A	+$140
CQ	glacier white A	+$0
IQ	aurora A	+$60
OQ	silt A	+$60
Q1	vanilla A	+$0
QB	bisque A	+$0

Sidesplash TW242.

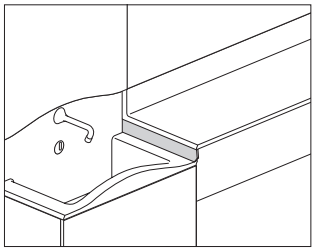

Product Information

Description

This sidesplash attaches to the left or right side of a 13"- or 21"-deep sink top to fill the gap between the edge of the sink and an adjacent standing-height work surface. Finish is Corian®. Attachment hardware included.

Notes

It is recommended to caulk the seam between the sidesplash and surface.

Dimensions

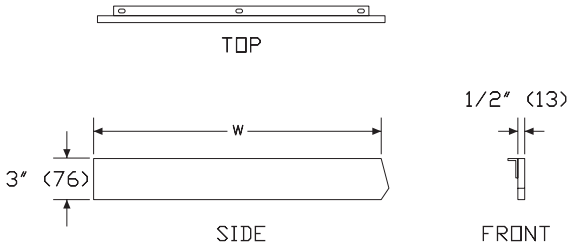

Specification Information

Step 1.

TW242. A

Step 2. Width

13	13" wide A
21	21" wide A

Step 3. Orientation

L	left A
R	right A

Step 4. Attachment Method

A	durawrap™ 3D laminate or 3D laminate work surface attachment A
B	corian work surface attachment A

Prices for Steps 1-4.

		A	B
TW242. 13	**L**	$205	201
	R	$205	201
21	**L**	$220	215
	R	$220	215

Step 5. Surface Finish

1N	canyon A	+$50
CQ	glacier white A	+$0
QB	bisque A	+$0
1E	flint A	+$75
1S	savannah A	+$50
1U	sahara A	+$50
3I	mojave A	+$50
4I	sandstone A	+$50
58	cameo white A	+$0
IQ	aurora A	+$50
OQ	silt A	+$50
Q1	vanilla A	+$0
7I	raffia A	+$75
BLP	blue pebble A	+$75

Sidesplash, ADA Compliant TW243.

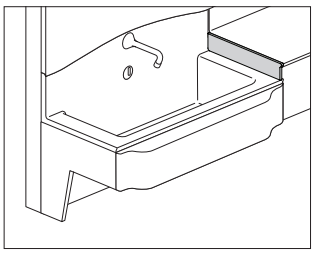

Product Information

Description

This sidesplash attaches to the left or right side of a 13"-deep ADA compliant sink top to fill the gap between the edge of the sink and an adjacent standing-height work surface. Finish is Corian®. Attachment hardware included.

Notes

It is recommended to caulk the seam between the sidesplash and surface.

Dimensions

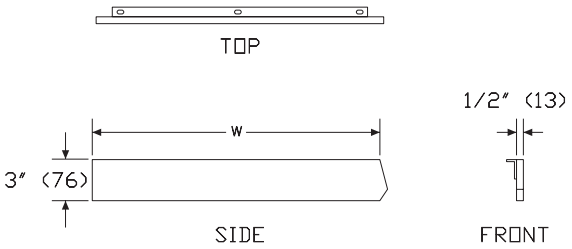

Specification Information

Step 1.

TW243. A

Step 2. Width

13 13" wide A

Step 3. Orientation

L left A

R right A

Step 4. Attachment Method

A durawrap™ 3D laminate or 3D laminate work surface attachment A

B corian work surface attachment A

Prices for Steps 1-4.

		A	B
TW243. 13	**L**	$223	218
	R	$223	218

Step 5. Surface Finish

58	cameo white A	+$0
CQ	glacier white A	+$0
Q1	vanilla A	+$0
QB	bisque A	+$0
1N	canyon A	+$50
1S	savannah A	+$50
1U	sahara A	+$50
3I	mojave A	+$50
4I	sandstone A	+$50
IQ	aurora A	+$50
OQ	silt A	+$50
1E	flint A	+$75
7I	raffia A	+$75
BLP	blue pebble A	+$75

Wardrobe Cabinet TW300.

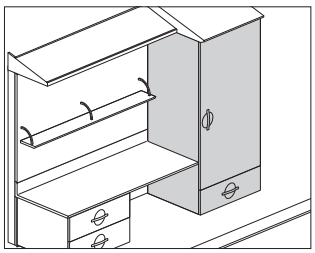

Product Information

Description

This non-locking cabinet attaches to 2 64"-high rail-attached stiles to provide storage for patient clothing and personal items. It has an upper interior shelf and a rod for hangers, and is available with a lower drawer. Top of cabinet requires a sloped cabinet top close-out, specified separately. The outside of the cabinet and the door/drawer fronts have 3D laminate surfaces. Durawrap™ 3D laminate is a 99.9% PVC-free material.

Notes

Drawer option (D) has full-extension ball-bearing slides.

No drawer option (N) has a full-height door with an additional lower shelf.

For bow pull option (C), pull finish is matte stainless. For arc pull option (D), pull finish is brushed nickel.

Specify close-out, sloped cabinet top (TW406.) separately.

Drawer liner will be installed if selected on unit.

Dimensions

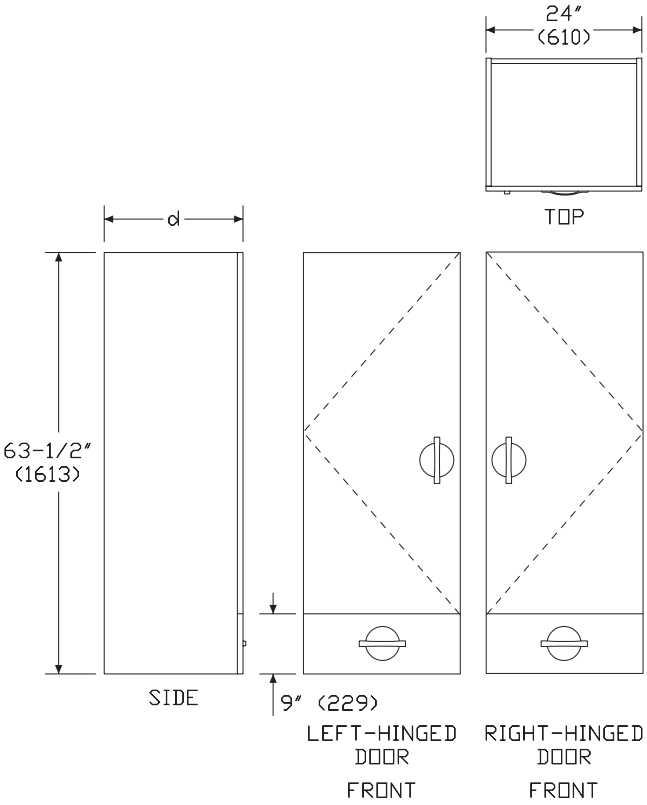

Specification Information

Step 1.

TW300.

Step 2. Depth

13	13″ deep
21	21″ deep

Step 3. Drawer Option

D	drawer with fixed upper interior shelf and rod
N	no drawer with fixed upper and lower interior shelf and rod

Step 4. Door Hinge Location

L	left-hinged door
R	right-hinged door

Step 5. Pull Type

B	flex pull
C	bow pull
D	arc pull
N	no pull

Step 6. Surface Material

A	durawrap™ 3D laminate
P	3D laminate A

Prices for Steps 1-6.

		LBA	LBP	LCA	LCP	LDA	LDP
TW300. 13	**D**	$1867	1704	1851	1689	1851	1689
	N	$1672	1527	1665	1520	1665	1520
21	**D**	$2162	1972	2146	1958	2146	1958
	N	$1851	1689	1843	1681	1843	1681

		LNA	LNP	RBA	RBP	RCA	RCP
TW300. 13	**D**	$1834	1674	1867	1704	1851	1689
	N	$1656	1512	1672	1527	1665	1520
21	**D**	$2130	1942	2162	1972	2146	1958
	N	$1834	1674	1851	1689	1843	1681

		RDA	RDP	RNA	RNP
TW300. 13	**D**	$1851	1689	1834	1674
	N	$1665	1520	1656	1512
21	**D**	$2146	1958	2130	1942
	N	$1843	1681	1834	1674

Step 7. Top/Side Finish

Solid-Color

For durawrap™ 3D laminate (A)

91	white	+$0
LU	soft white	+$0

Wood-Grain

For durawrap™ 3D laminate (A)

76	light brown walnut	+$25
HX	aged cherry	+$25
HM	natural maple	+$25
PX	Nemschoff light cherry	+$25
OG	honey maple	+$25

For 3D laminate (P)

120	light maple woodgrain 3D laminate A	+$0
121	golden maple woodgrain 3D laminate A	+$0
122	brown walnut woodgrain 3D laminate A	+$0
123	chocolate walnut woodgrain 3D laminate A	+$0
124	warm cherry woodgrain 3D laminate A	+$0
125	light teak woodgrain 3D laminate A	+$25
126	basic white 3D laminate A	+$0

Step 8. Front Finish

Solid-Color

For durawrap™ 3D laminate (A)

91	white	+$0
LU	soft white	+$0

Wood-Grain

For durawrap™ 3D laminate (A)

76	light brown walnut	+$25
HX	aged cherry	+$25
HM	natural maple	+$25
PX	Nemschoff light cherry	+$25
OG	honey maple	+$25

For 3D laminate (P)

120	light maple woodgrain 3D laminate A	+$0
121	golden maple woodgrain 3D laminate A	+$0
122	brown walnut woodgrain 3D laminate A	+$0
123	chocolate walnut woodgrain 3D laminate A	+$0
124	warm cherry woodgrain 3D laminate A	+$0
125	light teak woodgrain 3D laminate A	+$25
126	basic white 3D laminate A	+$0

Step 9. Pull Finish		
For flex pull (B)		
63	fog	+$0
5B	java	+$0

Step 10. Drawer Liner		
For drawer with fixed upper interior shelf and rod (D)		
NDL	no drawer liner	+$0
DRL	drawer liner	+$65

Full Height Storage Cabinet TW302.

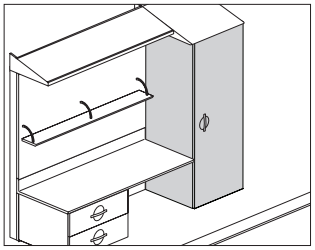

Product Information

Description

This storage cabinet attaches to 2 64″-high rail-attached stiles to provide storage for supplies. It comes with 4 adjustable shelves or 2 adjustable shelves and a Co/Struc® adapter that mounts inside the cabinet. The adapter has 9 slots at 3″ intervals to support Co/Struc storage components and accessories. The adapter allows the interior flexibility of Co/Struc storage products with the aesthetic of Compass™. If top of cabinet requires a sloped cabinet top close-out, specify separately. The outside of the cabinet and the door front have 3D laminate surfaces. Durawrap™ 3D laminate is a 99.9% PVC-free material.

Notes

For Co/Struc adapter option (C), order storage components separately:

- A-, B-, or C-size drawer (CO207, CO208, or CO209)
- C tray/shelf (CO203)
- C wire shelf (CO252)

For bow pull option (C), pull finish is matte stainless. For arc pull option (D), pull finish is brushed nickel.

Specify close-out, sloped cabinet top (TW406.) separately.

Dimensions

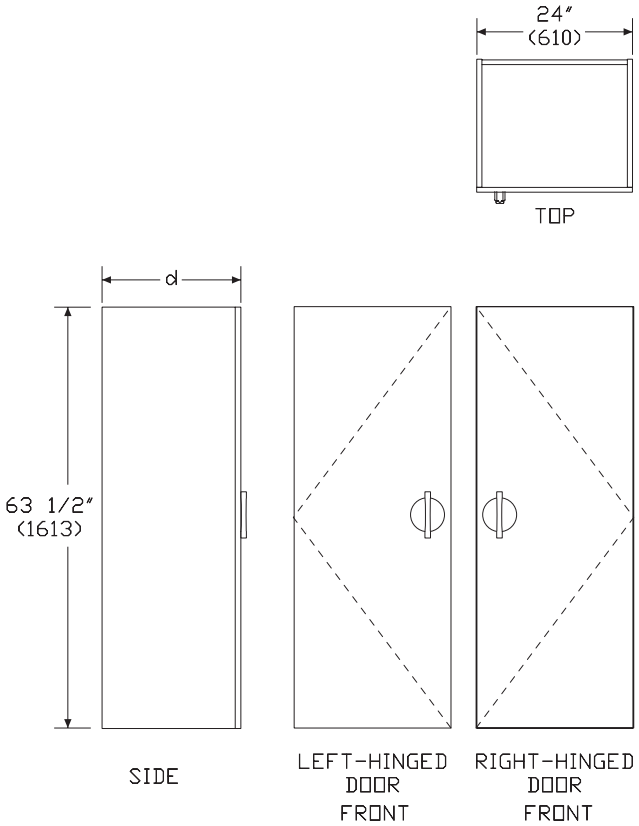

Specification Information

Step 1.

TW302.

Step 2. Depth

13	13" deep
21	21" deep

Step 3. Storage Options

For 13" deep (13)

A	4 adjustable shelves

For 21" deep (21)

A	4 adjustable shelves
C	2 adjustable shelves, Co/Struc adaptor included

Step 4. Door Hinge Location

L	left-hinged door
R	right-hinged door

Step 5. Pull Type

B	flex pull
C	bow pull
D	arc pull
N	no pull

Step 6. Storage Locks

L	keyless lock
N	no lock

Step 7. Surface Material

A	durawrap™ 3D laminate
P	3D laminate

Prices for Steps 1-7.

		LBLA	LBLP	LBNA	LBNP	LCLA	LCLP
TW302. 13	**A**	$2589	2404	2316	2133	2564	2381
21	**A**	$3135	2934	2862	2660	3103	2905
	C	$3273	3070	2999	2797	3240	3040

		LCNA	LCNP	LDLA	LDLP	LDNA	LDNP
TW302. 13	**A**	$2293	2112	2564	2381	2293	2112
21	**A**	$2835	2636	3103	2905	2835	2636
	C	$2970	2770	3240	3040	2970	2770

		LNLA	LNLP	LNNA	LNNP	RBLA	RBLP
TW302. 13	**A**	$2462	2284	2189	2014	2589	2404
21	**A**	$3005	2801	2733	2533	3135	2934
	C	$3142	2940	2870	2669	3273	3070

		RBNA	RBNP	RCLA	RCLP	RCNA	RCNP
TW302. 13	**A**	$2316	2133	2564	2381	2293	2112
21	**A**	$2862	2660	3103	2905	2835	2636
	C	$2999	2797	3240	3040	2970	2770

		RDLA	RDLP	RDNA	RDNP	RNLA	RNLP
TW302. 13	**A**	$2564	2381	2293	2112	2462	2284
21	**A**	$3103	2905	2835	2636	3005	2801
	C	$3240	3040	2970	2770	3142	2940

		RNNA	RNNP
TW302. 13	**A**	$2189	2014
21	**A**	$2733	2533
	C	$2870	2669

Step 8. Top/Side Finish

Solid-Color

For durawrap™ 3D laminate (A)

91	white	+$0
LU	soft white	+$0

Wood-Grain

For durawrap™ 3D laminate (A)

76	light brown walnut	+$25
HX	aged cherry	+$25
HM	natural maple	+$25
PX	Nemschoff light cherry	+$25
OG	honey maple	+$25

For 3D laminate (P)

120	light maple woodgrain 3D laminate	+$0
121	golden maple woodgrain 3D laminate	+$0
122	brown walnut woodgrain 3D laminate	+$0
123	chocolate walnut woodgrain 3D laminate	+$0
124	warm cherry woodgrain 3D laminate	+$0
125	light teak woodgrain 3D laminate	+$25
126	basic white 3D laminate	+$0

Step 9. Front Finish		
Solid-Color		
For durawrap™ 3D laminate (A)		
91	white	+$0
LU	soft white	+$0
Wood-Grain		
For durawrap™ 3D laminate (A)		
76	light brown walnut	+$25
HX	aged cherry	+$25
HM	natural maple	+$25
PX	Nemschoff light cherry	+$25
OG	honey maple	+$25
For 3D laminate (P)		
120	light maple woodgrain 3D laminate	+$0
121	golden maple woodgrain 3D laminate	+$0
122	brown walnut woodgrain 3D laminate	+$0
123	chocolate walnut woodgrain 3D laminate	+$0
124	warm cherry woodgrain 3D laminate	+$0
125	light teak woodgrain 3D laminate	+$25
126	basic white 3D laminate	+$0

Step 10. Pull Finish		
For flex pull (B)		
5B	java	+$0
63	fog	+$0

Half-Height Storage Cabinet TW305.

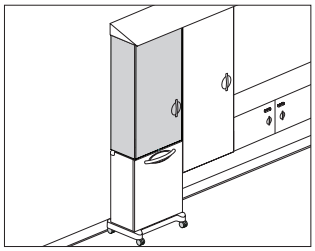

Product Information

Description

This half-height storage cabinet attaches to 2 64"-high rail-attached stiles to provide storage for supplies. It has 3 adjustable shelves. It is 45½" high to allow for a refrigerator, equipment, or linen cart to stow below. If top of cabinet requires a sloped cabinet top close-out, specify separately. The outside of the cabinet and the door front have 3D laminate surfaces. Durawrap™ 3D laminate is a 99.9% PVC-free material.

Notes

For bow pull option (C), pull finish is matte stainless. For arc pull option (D), pull finish is brushed nickel.

Specify close-out, sloped cabinet top (TW406.) separately.

If using a linen cart (TW501.) with this cabinet, specify linen cart tile with backsplash (TW130.BW) separately. Bottom of cabinet has hole template to facilitate installation of linen cart guides included with linen cart tile.

When no linen cart will be used, specify 24" work surface tile with backsplash (TW124.24BW) separately.

Dimensions

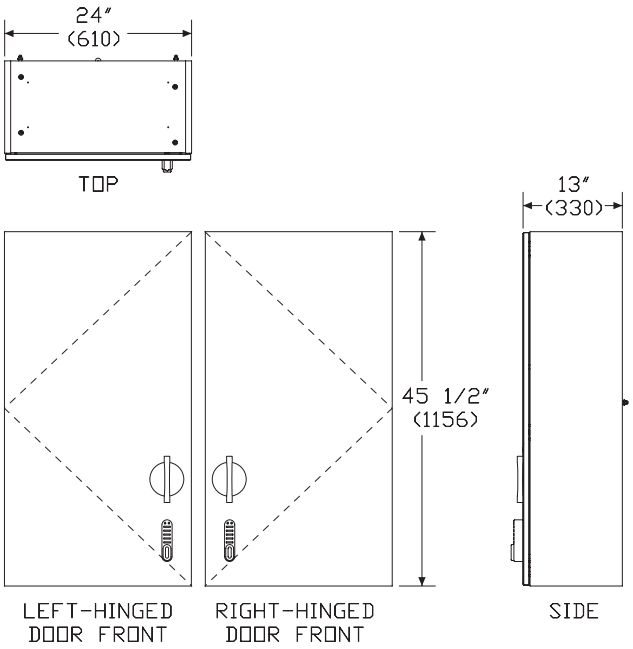

Specification Information

Step 1.

TW305.

Step 2. Depth

13 13" deep

Step 3. Storage Options

H 3 adjustable shelves

Step 4. Door Hinge Location

L left-hinged door

R right-hinged door

Step 5. Pull Type

B flex pull

C bow pull

D arc pull

N no pull

Step 6. Storage Locks

L keyless lock

N no lock

Step 7. Surface Material

A durawrap™ 3D laminate

P 3D laminate

Prices for Steps 1-7.

	LBLA	LBLP	LBNA	LBNP	LCLA	LCLP
TW305.13 H	$2173	1993	1898	1719	2152	1972

	LCNA	LCNP	LDLA	LDLP	LDNA	LDNP
TW305.13 H	$1879	1702	2152	1972	1879	1702

	LNLA	LNLP	LNNA	LNNP	RBLA	RBLP
TW305.13 H	$2050	1873	1782	1602	2173	1993

	RBNA	RBNP	RCLA	RCLP	RCNA	RCNP
TW305.13 H	$1898	1719	2152	1972	1879	1702

	RDLA	RDLP	RDNA	RDNP	RNLA	RNLP
TW305.13 H	$2152	1972	1879	1702	2050	1873

	RNNA	RNNP
TW305.13 H	$1782	1602

Step 8. Top/Side Finish

Solid-Color

For durawrap™ 3D laminate (A)

91	white	+$0
LU	soft white	+$0

Wood-Grain

For durawrap™ 3D laminate (A)

76	light brown walnut	+$25
HX	aged cherry	+$25
HM	natural maple	+$25
PX	Nemschoff light cherry	+$25
OG	honey maple	+$25

For 3D laminate (P)

120	light maple woodgrain 3D laminate	+$0
121	golden maple woodgrain 3D laminate	+$0
122	brown walnut woodgrain 3D laminate	+$0
123	chocolate walnut woodgrain 3D laminate	+$0
124	warm cherry woodgrain 3D laminate	+$0
125	light teak woodgrain 3D laminate	+$25
126	basic white 3D laminate	+$0

Step 9. Front Finish

Solid-Color

For durawrap™ 3D laminate (A)

91	white	+$0
LU	soft white	+$0

Wood-Grain

For durawrap™ 3D laminate (A)

76	light brown walnut	+$25
HX	aged cherry	+$25
HM	natural maple	+$25
PX	Nemschoff light cherry	+$25
OG	honey maple	+$25

For 3D laminate (P)

120	light maple woodgrain 3D laminate	+$0
121	golden maple woodgrain 3D laminate	+$0
122	brown walnut woodgrain 3D laminate	+$0
123	chocolate walnut woodgrain 3D laminate	+$0
124	warm cherry woodgrain 3D laminate	+$0
125	light teak woodgrain 3D laminate	+$25
126	basic white 3D laminate	+$0

Step 10. Pull Finish

For flex pull (B)

5B	java	+$0
63	fog	+$0

Drawer Module TW310.

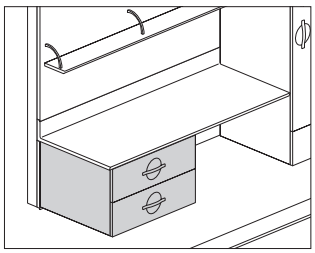

Product Information

Description

This module attaches to 2 rail-attached stiles to provide storage below a work surface and has drawers with full-extension ball-bearing slides. The outside of the module and the drawer fronts have 3D laminate surfaces. Durawrap™ 3D laminate is a 99.9% PVC-free material.

Notes

For bow pull option (C), pull finish is matte stainless. For arc pull option (D), pull finish is brushed nickel.

Lock option (L) locks the top drawer only.

Specify work surface (TW210.) separately.

It is recommended to order a work surface with a backsplash. If ordering a work surface without a backsplash, a special-height mini-tile would need to be ordered.

Drawer liner will be installed if selected on unit.

Dimensions

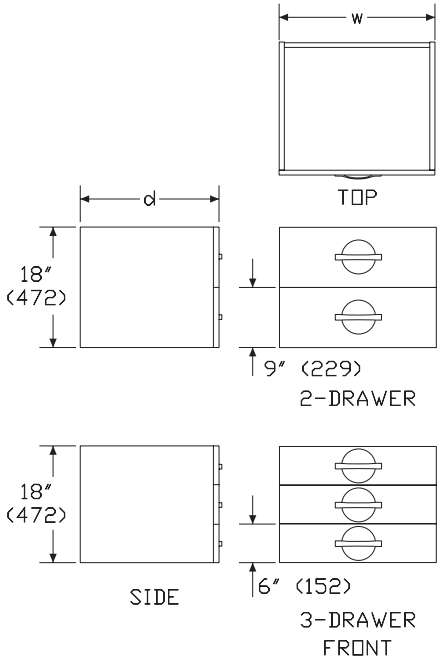

Specification Information

Step 1.

TW310.

Step 2. Depth

13 13″ deep
21 21″ deep

Step 3. Width

18 18″ wide
24 24″ wide

Step 4. Configuration

2 9″-high drawers
3 6″-high drawers

Step 5. Pull Type

B flex pull
C bow pull
D arc pull
N no pull

Step 6. Lock

L lock
N no lock

Step 7. Surface Material

A durawrap™ 3D laminate
P 3D laminate A

Prices for Steps 1-7.

		2BLA	2BLP	2BNA	2BNP	2CLA	2CLP
TW310. 13	18	$1408	1283	1038	944	1393	1266
	24	$1461	1335	1091	997	1445	1319
21	18	$1657	1507	1286	1169	1641	1492
	24	$1710	1560	1338	1222	1694	1544

		2CNA	2CNP	2DLA	2DLP	2DNA	2DNP
TW310. 13	18	$1021	928	1393	1266	1021	928
	24	$1075	981	1445	1319	1075	981
21	18	$1268	1154	1641	1492	1268	1154
	24	$1321	1206	1694	1544	1321	1206

		2NLA	2NLP	2NNA	2NNP	3BLA	3BLP
TW310. 13	18	$1376	1251	1004	911	1533	1395
	24	$1429	1305	1057	965	1587	1447

21	18	$1622	1476	1252	1137	1782	1620
	24	$1676	1529	1306	1190	1834	1674

		3BNA	3BNP	3CLA	3CLP	3CNA	3CNP
TW310.13	18	$1163	1056	1507	1372	1136	1032
	24	$1216	1109	1560	1425	1189	1086
21	18	$1408	1283	1755	1597	1383	1258
	24	$1461	1335	1809	1649	1436	1311

		3DLA	3DLP	3DNA	3DNP	3NLA	3NLP
TW310.13	18	$1507	1372	1136	1032	1482	1347
	24	$1560	1425	1189	1086	1534	1400
21	18	$1755	1597	1383	1258	1729	1575
	24	$1809	1649	1436	1311	1783	1627

		3NNA	3NNP
TW310.13	18	$1110	1009
	24	$1164	1061
21	18	$1358	1234
	24	$1411	1288

Step 8. Top/Side Finish

Solid-Color

For durawrap™ 3D laminate (A)

91	white	+$0
LU	soft white	+$0

Wood-Grain

For durawrap™ 3D laminate (A)

76	light brown walnut	+$10
HX	aged cherry	+$10
HM	natural maple	+$10
PX	Nemschoff light cherry	+$10
OG	honey maple	+$10

For 3D laminate (P)

120	light maple woodgrain 3D laminate A	+$0
121	golden maple woodgrain 3D laminate A	+$0
122	brown walnut woodgrain 3D laminate A	+$0
123	chocolate walnut woodgrain 3D laminate A	+$0
124	warm cherry woodgrain 3D laminate A	+$0
125	light teak woodgrain 3D laminate A	+$10
126	basic white 3D laminate A	+$0

Step 9. Front Finish

Solid-Color

For durawrap™ 3D laminate (A)

91	white	+$0
LU	soft white	+$0

Wood-Grain

For durawrap™ 3D laminate (A)

76	light brown walnut	+$10
HX	aged cherry	+$10
HM	natural maple	+$10
PX	Nemschoff light cherry	+$10
OG	honey maple	+$10

For 3D laminate (P)

120	light maple woodgrain 3D laminate A	+$0
121	golden maple woodgrain 3D laminate A	+$0
122	brown walnut woodgrain 3D laminate A	+$0
123	chocolate walnut woodgrain 3D laminate A	+$0
124	warm cherry woodgrain 3D laminate A	+$0
125	light teak woodgrain 3D laminate A	+$10
126	basic white 3D laminate A	+$0

Step 10. Pull Finish

For flex pull (B)

63	fog	+$0
5B	java	+$0

Step 11. Drawer Liner

For 18" wide (18)

NDL	no drawer liner	+$0

For 24" wide (24)

		2	3
NDL	no drawer liner	+$0	0
DRL	drawer liner	+$130	225

Lower Storage Cabinet with Doors TW312.

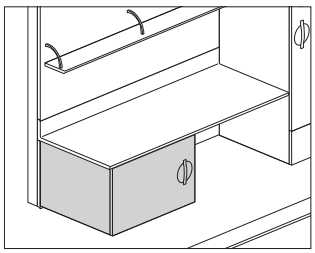

Product Information

Description

This storage cabinet comes in 3 widths and 13″ & 21″ depths and includes a wall saver. A fixed shelf is located 4″ from the bottom of the interior cabinet. Interior cabinet color is white.

Notes

Specify work surface (TW210./TW211.) separately to close off the top.

For power access (P), specify utility support rail (TW170.) and 2 single-gang electrical junction box attachment brackets with or without J-box (TW172.) separately.

It is recommended to order a work surface with a backsplash. If ordering a work surface without a backsplash, a special-height mini-tile would need to be ordered.

For lock option (L), one door has a keyless lock and the other door has a keyed lock.

For the flex pull (B), bow pull (C), and arc pull (D), the doors contain a pocket behind the handle. The no pull (N) door contains no pocket.

Dimensions

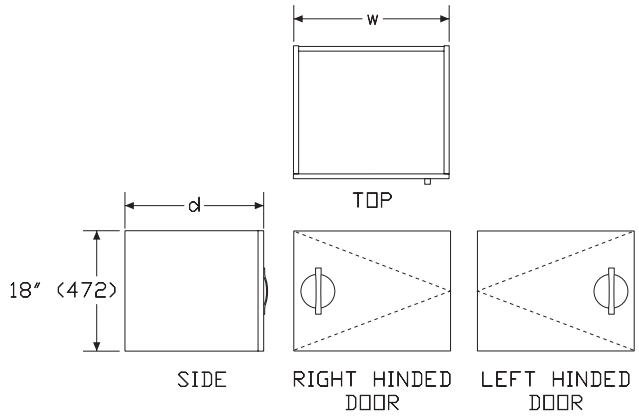

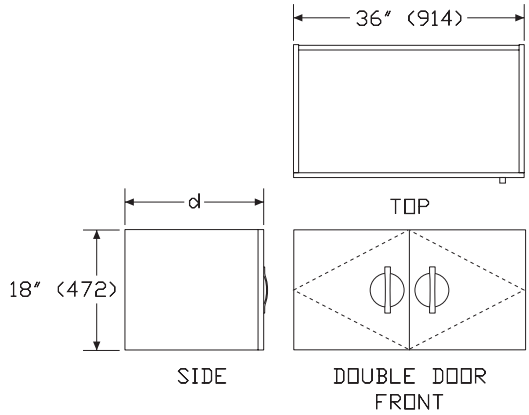

Lower Storage Cabinet with Doors

continued

Specification Information

Step 1.

TW312.

Step 2. Depth

13	13″ deep
21	21″ deep

Step 3. Width

18	18″ wide
24	24″ wide
36	36″ wide

Step 4. Door

For 18″ wide (18) or 24″ wide (24)

L	left-hinged door
R	right-hinged door

For 36″ wide (36)

D	double doors

Step 5. Pull Type

N	no pull
B	flex pull
C	bow pull
D	arc pull

Step 6. Lock

N	no lock
L	lock

Step 7. Surface Material

A	durawrap™ 3D laminate
P	3D laminate A

Prices for Steps 1-7.

		DNNA	DNNP	DNLA	DNLP	DBNA	DBNP
TW312. 13	**36**	$1089	994	1436	1310	1137	1037
21	**36**	$1320	1205	1668	1522	1370	1249

		DBLA	DBLP	DCNA	DCNP	DCLA	DCLP
TW312. 13	**36**	$1485	1353	1113	1015	1460	1332
21	**36**	$1718	1565	1345	1226	1693	1543

		DDNA	DDNP	DDLA	DDLP	LNNA	LNNP
TW312. 13	**18**	—	—	—	—	$936	849
	24	—	—	—	—	$989	902
	36	$1333	1216	1634	1490	—	—
21	**18**	—	—	—	—	$1169	1060
	24	—	—	—	—	$1222	1113
	36	$1504	1372	1809	1649	—	—

		LNLA	LNLP	LBNA	LBNP	LBLA	LBLP
TW312. 13	**18**	$1285	1167	968	879	1316	1196
	24	$1337	1220	1021	932	1370	1249
21	**18**	$1516	1378	1200	1090	1547	1406
	24	$1570	1431	1253	1143	1601	1459

		LCNA	LCNP	LCLA	LCLP	LDNA	LDNP
TW312. 13	**18**	$954	865	1300	1181	954	865
	24	$1007	917	1353	1234	1007	917
21	**18**	$1185	1076	1532	1076	1185	1076
	24	$1237	1128	1586	1445	1237	1128

		LDLA	LDLP	RNNA	RNNP	RNLA	RNLP
TW312. 13	**18**	$1300	1181	936	849	1285	1167
	24	$1353	1234	989	902	1337	1220
21	**18**	$1532	1393	1169	1060	1516	1378
	24	$1586	1445	1222	1113	1570	1431

		RBNA	RBNP	RBLA	RBLP	RCNA	RCNP
TW312. 13	**18**	$968	879	1316	1196	954	865
	24	$1021	932	1370	1249	1007	917
21	**18**	$1200	1090	1547	1406	1185	1076
	24	$1253	1143	1601	1459	1237	1128

		RCLA	RCLP	RDNA	RDNP	RDLA	RDLP
TW312. 13	**18**	$1300	1181	954	865	1300	1181
	24	$1353	1234	1007	917	1353	1234
21	**18**	$1532	1076	1185	1076	1532	1393
	24	$1586	1445	1237	1128	1586	1445

Step 8. Power Access

N	no power access	+$0
P	power access	+$30

Step 9. Top/Side Finish

Solid-Color

For durawrap™ 3D laminate (A)

91	white	+$0
LU	soft white	+$0

Wood-Grain

For durawrap™ 3D laminate (A)

76	light brown walnut	+$25
HM	natural maple	+$25
HX	aged cherry	+$25
OG	honey maple	+$25
PX	Nemschoff light cherry	+$25

For 3D laminate (P)

120	light maple woodgrain 3D laminate A	+$0
121	golden maple woodgrain 3D laminate A	+$0
122	brown walnut woodgrain 3D laminate A	+$0
123	chocolate walnut woodgrain 3D laminate A	+$0
124	warm cherry woodgrain 3D laminate A	+$0
125	light teak woodgrain 3D laminate A	+$25
126	basic white 3D laminate A	+$0

Step 10. Door Finish

Solid-Color

For durawrap™ 3D laminate (A)

91	white	+$0
LU	soft white	+$0

Wood-Grain

For durawrap™ 3D laminate (A)

76	light brown walnut	+$25
HM	natural maple	+$25
HX	aged cherry	+$25
OG	honey maple	+$25
PX	Nemschoff light cherry	+$25

For 3D laminate (P)

120	light maple woodgrain 3D laminate A	+$0
121	golden maple woodgrain 3D laminate A	+$0
122	brown walnut woodgrain 3D laminate A	+$0
123	chocolate walnut woodgrain 3D laminate A	+$0
124	warm cherry woodgrain 3D laminate A	+$0
125	light teak woodgrain 3D laminate A	+$25
126	basic white 3D laminate A	+$0

Step 11. Pull Finish

For flex pull (B)

63	fog	+$0
5B	java	+$0

Drawer and Printer Module TW314.

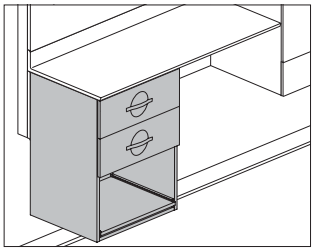

Product Information

Description

This 24"-wide nonpowered storage module attaches to 2 rail-attached stiles to provide storage below a work surface. It has drawers with full-extension ball-bearing slides. Below the drawers is an open cabinet with a fixed-height slide-out shelf to support a printer. Back panel has an 8" x 10" sealed opening for ease of wiring. Cabinet interior has a white melamine surface. The outside of the cabinet has a 3D laminate surface. Durawrap is 99.9% PVC free. Includes a wall saver to protect the architectural wall behind the module.

Notes

For bow pull option (C), pull finish is matte stainless. For arc pull option (D), pull finish is brushed nickel.

Lock option (L) locks the top drawer only.

Specify work surface (TW210.) separately.

It is recommended to order a work surface with a backsplash. If ordering a work surface without a backsplash, a special-height mini-tile would need to be ordered.

Drawer liner will be installed if selected on unit.

Dimensions

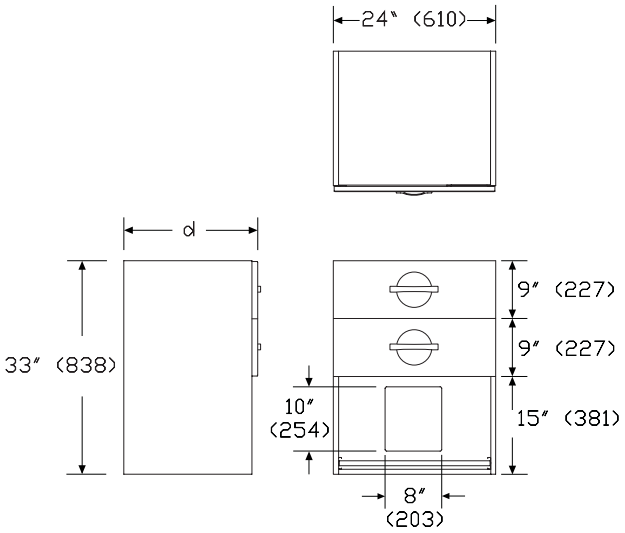

2-DRAWER

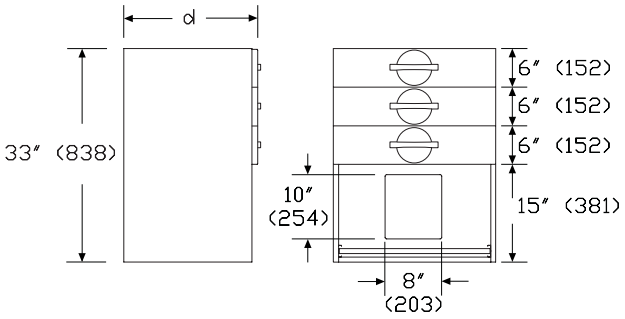

3-DRAWER

Specification Information

Step 1.

TW314.

Step 2. Depth

13	13″ deep
21	21″ deep

Step 3. Configuration

2	9″-high drawers
3	6″-high drawers

Step 4. Pull Type

B	flex pull
C	bow pull
D	arc pull
N	no pull

Step 5. Lock

L	lock
N	no lock

Step 6. Surface Material

A	durawrap™ 3D laminate
P	3D laminate A

Prices for Steps 1-6.

		BLA	BLP	BNA	BNP	CLA	CLP
TW314. 13	**2**	$1902	1734	1614	1472	1947	1776
	3	$2064	1881	1779	1620	2136	1946
21	**2**	$2321	2116	2033	1855	2368	2159
	3	$2461	2244	2174	1983	2531	2309

		CNA	CNP	DLA	DLP	DNA	DNP
TW314. 13	**2**	$1662	1515	1902	1734	1614	1472
	3	$1849	1686	2064	1881	1779	1620
21	**2**	$2081	1899	2321	2116	2033	1855
	3	$2244	2046	2461	2244	2174	1983

		NLA	NLP	NNA	NNP
TW314. 13	**2**	$1830	1669	1543	1407
	3	$1969	1797	1684	1535
21	**2**	$2250	2051	1963	1791
	3	$2366	2157	2080	1898

Step 7. Top/Side Finish

Solid-Color

For durawrap™ 3D laminate (A)

91	white	+$0
LU	soft white	+$0

Wood-Grain

For durawrap™ 3D laminate (A)

76	light brown walnut	+$10
HM	natural maple	+$10
HX	aged cherry	+$10
OG	honey maple	+$10
PX	Nemschoff light cherry	+$10

For 3D laminate (P)

120	light maple woodgrain 3D laminate A	+$0
121	golden maple woodgrain 3D laminate A	+$0
122	brown walnut woodgrain 3D laminate A	+$0
123	chocolate walnut woodgrain 3D laminate A	+$0
124	warm cherry woodgrain 3D laminate A	+$0
125	light teak woodgrain 3D laminate A	+$10
126	basic white 3D laminate A	+$0

Step 8. Front Finish

Solid-Color

For durawrap™ 3D laminate (A)

91	white	+$0
LU	soft white	+$0

Wood-Grain

For durawrap™ 3D laminate (A)

76	light brown walnut	+$10
HM	natural maple	+$10
HX	aged cherry	+$10
OG	honey maple	+$10
PX	Nemschoff light cherry	+$10

For 3D laminate (P)

120	light maple woodgrain 3D laminate A	+$0
121	golden maple woodgrain 3D laminate A	+$0
122	brown walnut woodgrain 3D laminate A	+$0
123	chocolate walnut woodgrain 3D laminate A	+$0
124	warm cherry woodgrain 3D laminate A	+$0
125	light teak woodgrain 3D laminate A	+$10
126	basic white 3D laminate A	+$0

Step 9. Pull Finish		
For flex pull (B)		
63	fog	+$0
5B	java	+$0

Step 10. Drawer Liner			
		2	**3**
NDL	no drawer liner	+$0	0
DRL	drawer liner	+$130	225

Storage and Printer Module TW315.

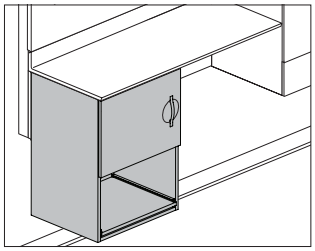

Product Information

Description

This 24"-wide nonpowered module attaches to 2 rail-attached stiles to provide storage below a work surface. Below the storage cabinet is an open cabinet with a fixed-height slide-out shelf to support a printer. Back panel has an 8" x 10" sealed opening for ease of wiring. Cabinet interior has a white melamine surface. The outside of the cabinet has a 3D laminate surface. Durawrap is 99.9% PVC free. Includes a wall saver to protect the architectural wall behind the module.

Notes

For bow pull option (C), pull finish is matte stainless. For arc pull option (D), pull finish is brushed nickel.

Specify work surface (TW210.) separately.

It is recommended to order a work surface with a backsplash. If ordering a work surface without a backsplash, a special-height mini-tile would need to be ordered.

For flex pull (B), bow pull (C), and arc pull (D) options, the doors contain a pocket behind the handle. The no pull (N) door contains no pocket.

Dimensions

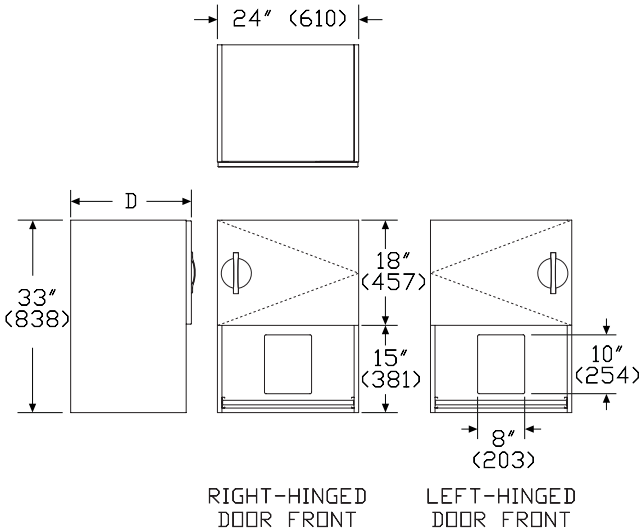

Specification Information

Step 1.

TW315.

Step 2. Depth

13 13" deep

21 21" deep

Step 3. Door

L left-hinged door

R right-hinged door

Step 4. Pull Type

B flex pull

C bow pull

D arc pull

N no pull

Step 5. Lock

L lock

N no lock

Step 6. Surface Material

A durawrap™ 3D laminate

P 3D laminate [A]

Prices for Steps 1-6.

		BLA	BLP	BNA	BNP	CLA	CLP
TW315.13	**L**	$1601	1459	1347	1228	1623	1482
	R	$1601	1459	1347	1228	1623	1482
21	**L**	$1947	1776	1702	1551	1970	1798
	R	$1947	1776	1702	1551	1970	1798

		CNA	CNP	DLA	DLP	DNA	DNP
TW315.13	**L**	$1371	1250	1601	1459	1347	1228
	R	$1371	1250	1601	1459	1347	1228
21	**L**	$1725	1574	1947	1776	1702	1551
	R	$1725	1574	1947	1776	1702	1551

		NLA	NLP	NNA	NNP
TW315.13	**L**	$1565	1428	1312	1196
	R	$1565	1428	1312	1196
21	**L**	$1913	1743	1666	1520
	R	$1913	1743	1666	1520

Step 7. Top/Side Finish

Solid-Color

For durawrap™ 3D laminate (A)

91	white	+$0
LU	soft white	+$0

Wood-Grain

For durawrap™ 3D laminate (A)

76	light brown walnut	+$10
HM	natural maple	+$10
HX	aged cherry	+$10
OG	honey maple	+$10
PX	Nemschoff light cherry	+$10

For 3D laminate (P)

120	light maple woodgrain 3D laminate A	+$0
121	golden maple woodgrain 3D laminate A	+$0
122	brown walnut woodgrain 3D laminate A	+$0
123	chocolate walnut woodgrain 3D laminate A	+$0
124	warm cherry woodgrain 3D laminate A	+$0
125	light teak woodgrain 3D laminate A	+$10
126	basic white 3D laminate A	+$0

Step 8. Door Finish

Solid-Color Laminate

For durawrap™ 3D laminate (A)

91	white	+$0
LU	soft white	+$0

Wood-Grain Laminate

For durawrap™ 3D laminate (A)

76	light brown walnut	+$10
HM	natural maple	+$10
HX	aged cherry	+$10
OG	honey maple	+$10
PX	Nemschoff light cherry	+$10

For 3D laminate (P)

120	light maple woodgrain 3D laminate	+$0
121	golden maple woodgrain 3D laminate	+$0
122	brown walnut woodgrain 3D laminate	+$0
123	chocolate walnut woodgrain 3D laminate	+$0
124	warm cherry woodgrain 3D laminate	+$0
125	light teak woodgrain 3D laminate	+$10
126	basic white 3D laminate	+$0

Step 9. Pull Finish

For flex pull (B)

63	fog	+$0
5B	java	+$0

Storage Cabinet TW320.

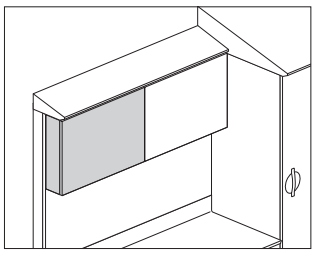

Product Information

Description

This non-locking cabinet attaches to 2 rail-attached stiles in the upper tile position to provide small and medium item storage. Hinged door(s) have a magnetic closure. Cabinet interior has white melamine surface. The outside of the cabinet has a 3D laminate surface. Durawrap™ 3D laminate is a 99.9% PVC-free material.

Notes

For 13″ deep upper storage cabinet (13), order 21″ deep lower storage products.

For 6″ deep (06) or 9″ deep upper storage cabinet (09), order 13″ deep or 21″ deep lower storage products.

Dimensions

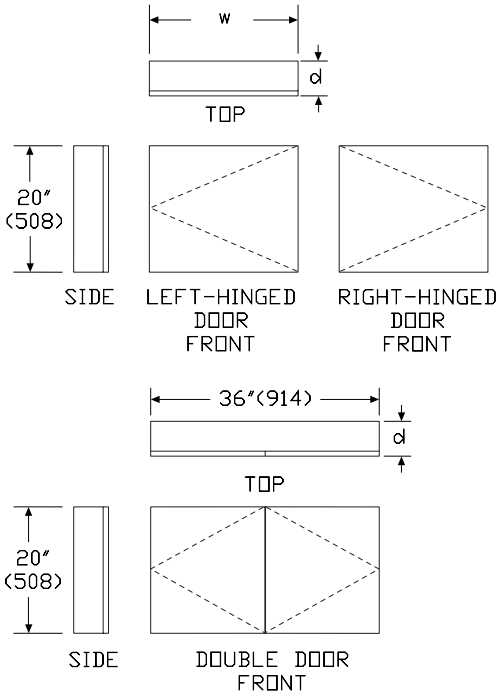

Specification Information

Step 1.

TW320.

Step 2. Depth

06 6″ deep
09 9″ deep
13 13″ deep

Step 3. Width

18 18″ wide
24 24″ wide
30 30″ wide
36 36″ wide

Step 4. Door Hinge Location

For 18″ wide (18), 24″ wide (24), or 30″ wide (30)

L left-hinged door
R right-hinged door

For 36″ wide (36)

D double doors

Step 5. Surface Material

A durawrap™ 3D laminate
P 3D laminate A

Prices for Steps 1-5.

		DA	DP	LA	LP	RA	RP
TW320. 06	**18**	—	—	$544	467	544	467
	24	—	—	$645	588	645	588
	30	—	—	$942	859	942	859
	36	$1006	915	—	—	—	—
09	**18**	—	—	$675	583	675	583
	24	—	—	$735	669	735	669
	30	—	—	$1061	967	1061	967
	36	$1088	990	—	—	—	—
13	**18**	—	—	$802	698	802	698
	24	—	—	$870	792	870	792
	30	—	—	$1194	1088	1194	1088
	36	$1219	1110	—	—	—	—

Step 6. Top/Side Finish

Solid-Color

For durawrap™ 3D laminate (A)

91	white	+$0
LU	soft white	+$0

Wood-Grain

For durawrap™ 3D laminate (A)

76	light brown walnut	+$10
HX	aged cherry	+$10
HM	natural maple	+$10
PX	Nemschoff light cherry	+$10
OG	honey maple	+$10

For 3D laminate (P)

120	light maple woodgrain 3D laminate A	+$0
121	golden maple woodgrain 3D laminate A	+$0
122	brown walnut woodgrain 3D laminate A	+$0
123	chocolate walnut woodgrain 3D laminate A	+$0
124	warm cherry woodgrain 3D laminate A	+$0
125	light teak woodgrain 3D laminate A	+$10
126	basic white 3D laminate A	+$0

Step 7. Door Finish

Solid-Color

For durawrap™ 3D laminate (A)

91	white	+$0
LU	soft white	+$0

Wood-Grain

For durawrap™ 3D laminate (A)

76	light brown walnut	+$10
HX	aged cherry	+$10
HM	natural maple	+$10
PX	Nemschoff light cherry	+$10
OG	honey maple	+$10

For 3D laminate (P)

120	light maple woodgrain 3D laminate A	+$0
121	golden maple woodgrain 3D laminate A	+$0
122	brown walnut woodgrain 3D laminate A	+$0
123	chocolate walnut woodgrain 3D laminate A	+$0
124	warm cherry woodgrain 3D laminate A	+$0
125	light teak woodgrain 3D laminate A	+$10
126	basic white 3D laminate A	+$0

Glove Cabinet TW322.

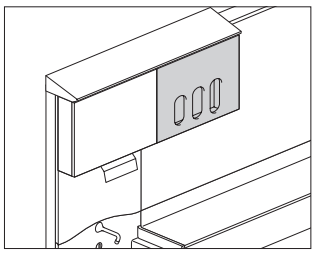

Product Information

Description

This non-locking cabinet attaches to 2 rail-attached stiles in the upper tile position and holds 3 boxes of gloves. The interior allows for additional storage. The outside of the cabinet and the door front have 3D laminate surfaces. Durawrap™ 3D laminate is a 99.9% PVC-free material.

Dimensions

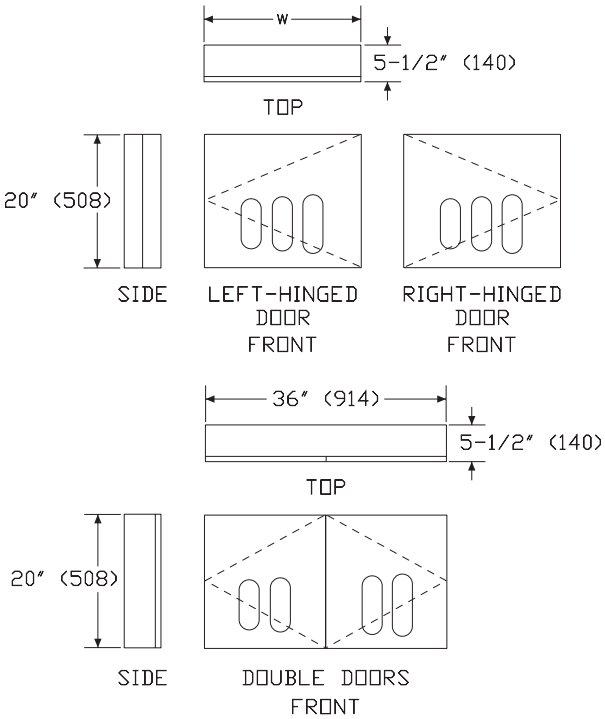

Specification Information

Step 1.

TW322.06

Step 2. Width

24	24" wide
30	30" wide
36	36" wide

Step 3. Door Hinge Location

For 24" wide (24) or 30" wide (30)

L	left-hinged door
R	right-hinged door

For 36" wide (36)

D	double doors

Step 4. Surface Material

A	durawrap™ 3D laminate
P	3D laminate A

Prices for Steps 1-4.

			A	P
TW322.06	**24**	**L**	$742	677
		R	$742	677
	30	**L**	$1073	979
		R	$1073	979
	36	**D**	$1130	1031

Step 5. Top/Side Finish

Solid-Color

For durawrap™ 3D laminate (A)

91	white	+$0
LU	soft white	+$0

Wood-Grain

For durawrap™ 3D laminate (A)

76	light brown walnut	+$10
HX	aged cherry	+$10
HM	natural maple	+$10
PX	Nemschoff light cherry	+$10
OG	honey maple	+$10

For 3D laminate (P)

120	light maple woodgrain 3D laminate A	+$0
121	golden maple woodgrain 3D laminate A	+$0
122	brown walnut woodgrain 3D laminate A	+$0
123	chocolate walnut woodgrain 3D laminate A	+$0
124	warm cherry woodgrain 3D laminate A	+$0
125	light teak woodgrain 3D laminate A	+$10
126	basic white 3D laminate A	+$0

Step 6. Door Finish

Solid-Color

For durawrap™ 3D laminate (A)

91	white	+$0
LU	soft white	+$0

Wood-Grain

For durawrap™ 3D laminate (A)

76	light brown walnut	+$10
HX	aged cherry	+$10
HM	natural maple	+$10
PX	Nemschoff light cherry	+$10
OG	honey maple	+$10

For 3D laminate (P)

120	light maple woodgrain 3D laminate A	+$0
121	golden maple woodgrain 3D laminate A	+$0
122	brown walnut woodgrain 3D laminate A	+$0
123	chocolate walnut woodgrain 3D laminate A	+$0
124	warm cherry woodgrain 3D laminate A	+$0
125	light teak woodgrain 3D laminate A	+$10
126	basic white 3D laminate A	+$0

Paper Towel Cabinet TW324.

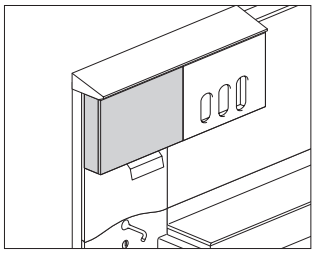

Product Information

Description

This non-locking cabinet attaches to 2 rail-attached stiles in the upper tile position to cover a field-supplied paper towel dispenser. The interior allows for storage of additional paper towels. The outside of the cabinet and the door front have 3D laminate surfaces. Durawrap™ 3D laminate is a 99.9% PVC-free material.

Dimensions

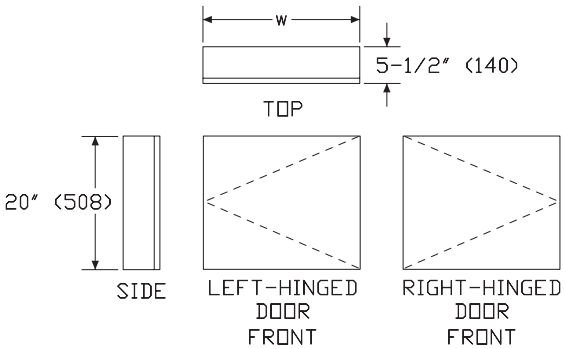

Specification Information

Step 1.

TW324.06

Step 2. Width

24	24" wide

Step 3. Door Hinge Location

L	left-hinged door
R	right-hinged door

Step 4. Surface Material

A	durawrap™ 3D laminate
P	3D laminate A

Prices for Steps 1-4.

		A	P
TW324.06 24	**L**	$703	644
	R	$703	644

Step 5. Top/Side Finish

Solid-Color

For durawrap™ 3D laminate (A)

91	white	+$0
LU	soft white	+$0

Wood-Grain

For durawrap™ 3D laminate (A)

76	light brown walnut	+$10
HX	aged cherry	+$10
HM	natural maple	+$10
PX	Nemschoff light cherry	+$10
OG	honey maple	+$10

For 3D laminate (P)

120	light maple woodgrain 3D laminate A	+$0
121	golden maple woodgrain 3D laminate A	+$0
122	brown walnut woodgrain 3D laminate A	+$0
123	chocolate walnut woodgrain 3D laminate A	+$0
124	warm cherry woodgrain 3D laminate A	+$0
126	basic white 3D laminate A	+$0
125	light teak woodgrain 3D laminate A	+$10

Step 6. Door Finish

Solid-Color

For durawrap™ 3D laminate (A)

91	white	+$0
LU	soft white	+$0

Wood-Grain

For durawrap™ 3D laminate (A)

76	light brown walnut	+$10
HX	aged cherry	+$10
HM	natural maple	+$10
PX	Nemschoff light cherry	+$10
OG	honey maple	+$10

For 3D laminate (P)

120	light maple woodgrain 3D laminate A	+$0
121	golden maple woodgrain 3D laminate A	+$0
122	brown walnut woodgrain 3D laminate A	+$0
123	chocolate walnut woodgrain 3D laminate A	+$0
124	warm cherry woodgrain 3D laminate A	+$0
126	basic white 3D laminate A	+$0
125	light teak woodgrain 3D laminate A	+$10

Glove and Paper Combo Cabinet TW326.

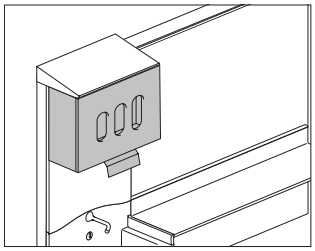

Product Information

Description

This non-locking combination glove and towel cabinet attaches to 2 rail-attached stiles in the upper tile position and holds 3 boxes of gloves and a field supplied paper towel dispenser. Hinged door(s) have a magnetic closure. Cabinet interior has a white melamine surface. The paper towel cabinet is in the back center of the cabinet in all sizes. The outside of the cabinet has a 3D laminate surface. Durawrap™ 3D laminate is a 99.9% PVC-free material.

Notes

It is recommended to leave an empty box (if a particular glove size is diminished) to hold the other boxes in place.

There is extra storage space on the top shelf (included) for 2 additional boxes of gloves (horizontally) for 24"-wide cabinets and for 3 additional boxes of gloves for 36"-wide cabinets.

Dimensions

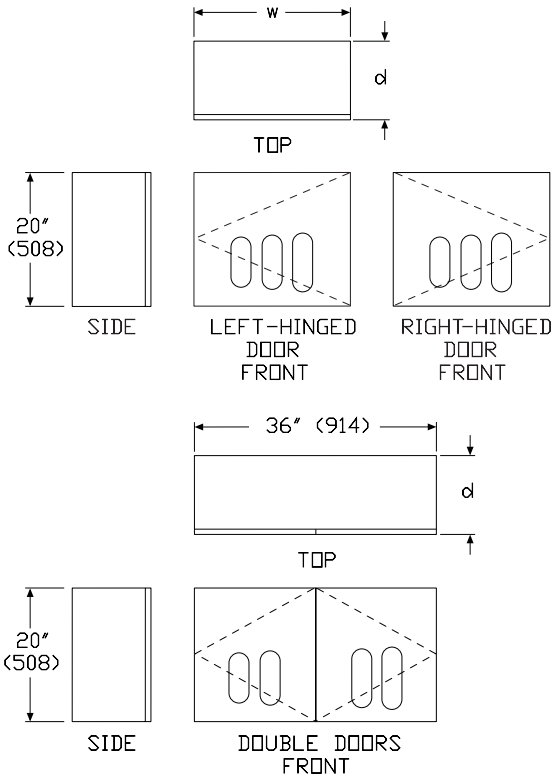

Specification Information

Step 1.

TW326.

Step 2. Depth

09 9" deep
13 13" deep

Step 3. Width

24 24" wide
30 30" wide
36 36" wide

Step 4. Door Hinge Location

For 24" wide (24) or 30" wide (30)

L left-hinged door
R right-hinged door

For 36" wide (36)

D double doors

Step 5. Surface Material

A durawrap™ 3D laminate
P 3D laminate A

Prices for Steps 1-5.

		DA	DP	LA	LP	RA	RP
TW326. 09	**24**	—	—	$907	828	907	828
	30	—	—	$1103	1006	1103	1006
	36	$1299	1184	—	—	—	—
13	**24**	—	—	$1025	935	1025	935
	30	—	—	$1227	1118	1227	1118
	36	$1429	1303	—	—	—	—

Step 6. Top/Side Finish

Solid-Color

For durawrap™ 3D laminate (A)

91 white +$0
LU soft white +$0

Glove and Paper Combo Cabinet

continued

Wood-Grain

For durawrap™ 3D laminate (A)

76	light brown walnut	+$10
HM	natural maple	+$10
HX	aged cherry	+$10
OG	honey maple	+$10
PX	Nemschoff light cherry	+$10

For 3D laminate (P)

120	light maple woodgrain 3D laminate A	+$0
121	golden maple woodgrain 3D laminate A	+$0
122	brown walnut woodgrain 3D laminate A	+$0
123	chocolate walnut woodgrain 3D laminate A	+$0
124	warm cherry woodgrain 3D laminate A	+$0
125	light teak woodgrain 3D laminate A	+$10
126	basic white 3D laminate A	+$0

Step 7. Door Finish

Solid-Color

For durawrap™ 3D laminate (A)

91	white	+$0
LU	soft white	+$0

Wood-Grain

For durawrap™ 3D laminate (A)

76	light brown walnut	+$10
HM	natural maple	+$10
HX	aged cherry	+$10
OG	honey maple	+$10
PX	Nemschoff light cherry	+$10

For 3D laminate (P)

120	light maple woodgrain 3D laminate A	+$0
121	golden maple woodgrain 3D laminate A	+$0
122	brown walnut woodgrain 3D laminate A	+$0
123	chocolate walnut woodgrain 3D laminate A	+$0
124	warm cherry woodgrain 3D laminate A	+$0
125	light teak woodgrain 3D laminate A	+$10
126	basic white 3D laminate A	+$0

Drawer Liner TW390.

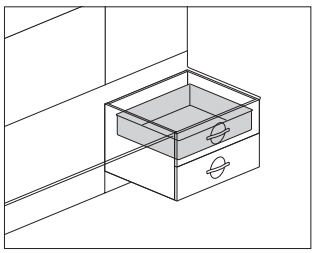

Product Information

Description

This plastic insert fits into drawers in a drawer module or wardrobe cabinet to help with infection control. It has radius edges for easy wipe-down. Finish is white.

Dimensions

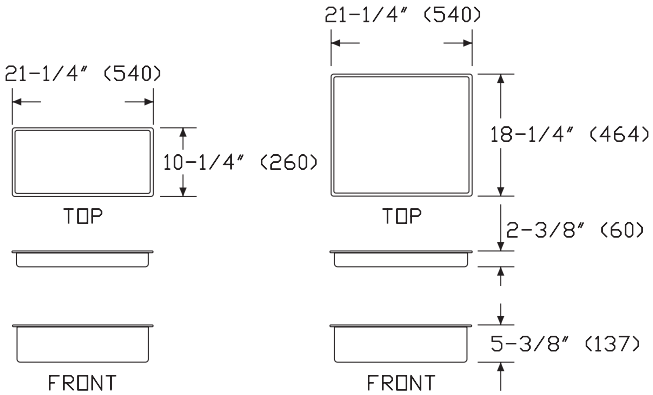

Specification Information

Step 1.

TW390.

Step 2. Depth

13 13" deep

21 21" deep

Step 3. Height

06 6" high

09 9" high

Prices for Steps 1-3.

		06	09
TW390.	**13**	$66	73
	21	$79	85

Waste Receptacle Cabinet TW316.

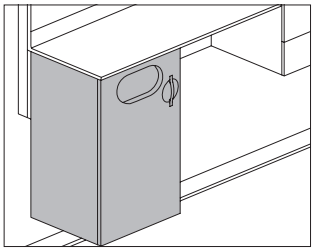

Product Information

Description

This waste cabinet attaches to 2 rail-attached stiles to provide storage for a waste receptacle below a work surface. A slim profile bracket attaches to the door that holds the waste receptacle. Cabinet is designed to accommodate a 7-gallon or 10-gallon waste bin. Door is available with a cutout to allow touch-free access to the waste bin. Cabinet interior has a white melamine surface. The outside of the cabinet has a 3D laminate surface. Durawrap™ 3D laminate is a 99.9% PVC-free material. Includes a wall saver to protect the architectural wall behind the module.

Notes

Waste bin not included. See Planning Guide for recommendations.

For bow pull option (C), pull finish is matte stainless. For arc pull option (D), pull finish is brushed nickel.

Specify work surface (TW210.) separately.

It is recommended to order a work surface with a backsplash. If ordering a work surface without a backsplash, a special-height mini-tile would need to be ordered.

For flex pull (B), bow pull (C), and arc pull (D) options, the doors contain a pocket behind the handle. The no pull (N) door contains no pocket.

Dimensions

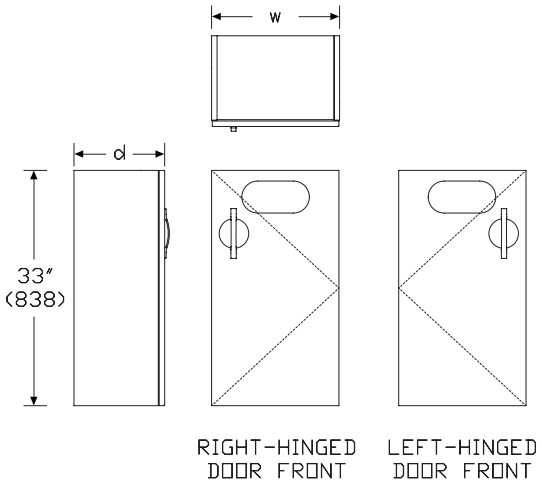

Specification Information

Step 1.

TW316. A

Step 2. Depth

13 13″ deep A
21 21″ deep A

Step 3. Width

18 18″ wide A
24 24″ wide A

Step 4. Door

L left-hinged door A
R right-hinged door A

Step 5. Cutout Option

N no cutout A
C cutout A

Step 6. Pull Type

B flex pull A
C bow pull A
D arc pull A
N no pull A

Step 7. Surface Material

A durawrap™ 3D laminate A
P 3D laminate A

Prices for Steps 1-7.

		LNBA	LNBP	LNCA	LNCP	LNDA	LNDP
TW316. 13	**18**	$1105	976	1127	998	1105	976
	24	$1160	1029	1183	1051	1160	1029
21	**18**	$1314	1159	1337	1180	1314	1159
	24	$1391	1225	1411	1247	1390	1225

		LNNA	LNNP	LCBA	LCBP	LCCA	LCCP
TW316. 13	**18**	$1072	942	1117	987	1140	1011
	24	$1126	996	1173	1041	1194	1065
21	**18**	$1281	1124	1326	1170	1349	1192
	24	$1355	1191	1402	1237	1425	1261

		LCDA	LCDP	LCNA	LCNP	RNBA	RNBP
TW316. 13	**18**	$1117	988	1085	955	1105	976
	24	$1173	1041	1139	1008	1160	1029

21	**18**	$1326	1170	1293	1137	1314	1159
	24	$1401	1237	1369	1204	1391	1225

		RNCA	**RNCP**	**RNDA**	**RNDP**	**RNNA**	**RNNP**
TW316.13	**18**	$1127	998	1105	976	1072	942
	24	$1183	1051	1160	1029	1126	996
21	**18**	$1337	1180	1314	1159	1281	1124
	24	$1411	1247	1390	1225	1355	1191

		RCBA	**RCBP**	**RCCA**	**RCCP**	**RCDA**	**RCDP**
TW316.13	**18**	$1117	987	1140	1011	1117	988
	24	$1173	1041	1194	1065	1173	1041
21	**18**	$1326	1170	1349	1192	1326	1170
	24	$1402	1237	1425	1261	1401	1237

		RCNA	**RCNP**
TW316.13	**18**	$1085	955
	24	$1139	1008
21	**18**	$1293	1137
	24	$1369	1204

Step 8. Top/Side Finish

For 3D laminate (P)

120	light maple woodgrain 3D laminate A	+$0
121	golden maple woodgrain 3D laminate A	+$0
122	brown walnut woodgrain 3D laminate A	+$0
123	chocolate walnut woodgrain 3D laminate A	+$0
124	warm cherry woodgrain 3D laminate A	+$0
125	light teak woodgrain 3D laminate A	+$10
126	basic white 3D laminate A	+$0

For durawrap™ 3D laminate (A)

91	white A	+$0
LU	soft white A	+$0

For durawrap™ 3D laminate (A)

76	light brown walnut A	+$10
HM	natural maple A	+$10
HX	aged cherry A	+$10
OG	honey maple A	+$10
PX	Nemschoff light cherry A	+$10

Step 9. Door Finish

For durawrap™ 3D laminate (A)

91	white A	+$0
LU	soft white A	+$0

For durawrap™ 3D laminate (A)

76	light brown walnut A	+$10
HM	natural maple A	+$10
HX	aged cherry A	+$10
OG	honey maple A	+$10
PX	Nemschoff light cherry A	+$10

For 3D laminate (P)

120	light maple woodgrain 3D laminate A	+$0
121	golden maple woodgrain 3D laminate A	+$0
122	brown walnut woodgrain 3D laminate A	+$0
123	chocolate walnut woodgrain 3D laminate A	+$0
124	warm cherry woodgrain 3D laminate A	+$0
125	light teak woodgrain 3D laminate A	+$10
126	basic white 3D laminate A	+$0

Step 10. Pull Finish

For flex pull (B)

5B	java A	+$0
63	fog A	+$0

Close-out, Side TW400.

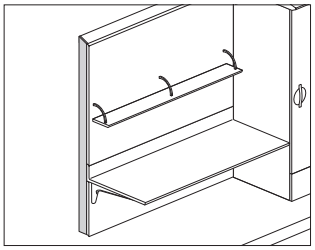

Product Information

Description

This plastic close-out finishes the exposed side of a stile at the end of a wall rail.

Notes

When wall rails extend past the stile and close-out, specify cutout(s) for wall rail option (C). Finish the cutouts with close-out grommet (TW409.), specified separately.

Close-out with cutout(s) for wall rail option (C) has 1 cutout for 24″-high, 2 cutouts for 64″- and 89″-high.

Top edge of close-out is flat. Field cutting is required to match top edge with close-out, top (TW402.) or close-out, sloped cabinet top (TW406.).

Dimensions

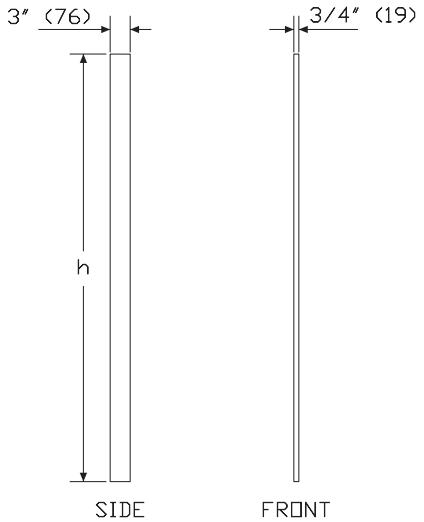

Specification Information

Step 1.

TW400.

Step 2. Height

24	24″ high
64	64″ high
89	89″ high

Step 3. Type

L	left
R	right

Step 4. Cutout

C	cutout(s) for wall rail
N	no cutout(s) for wall rail

Prices for Steps 1-4.

			C	N
TW400.	**24**	**L**	$42	32
		R	$42	32
	64	**L**	$73	49
		R	$73	49
	89	**L**	$109	86
		R	$109	86

Step 5. Surface Finish

91	white	+$0
LU	soft white	+$0

Close-out, Top TW402.

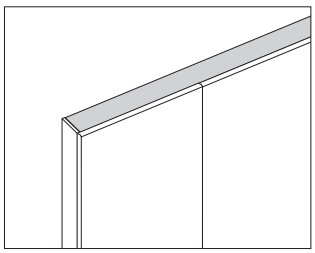

Product Information

Description

This plastic close-out finishes the gap between the architectural wall and tiles at the top of rail-attached stiles. It has a 20° slope for ease of cleaning and infection control. It can be field-cut to match the width of the wall, or to accommodate a chase. Attachment hardware included.

Dimensions

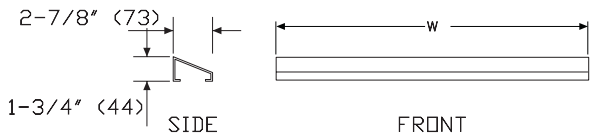

Specification Information

Step 1.

TW402.

Step 2. Application

A	for use between two side closeouts

Step 3. Width

18	18" wide A
24	24" wide
36	36" wide
48	48" wide
60	60" wide
72	72" wide
84	84" wide
96	96" wide

Prices for Steps 1-3.

	18	**24**	**36**	**48**	**60**	**72**
TW402. A	$57	62	66	69	81	93

	84	**96**
TW402. A	$103	119

Step 4. Surface Finish

91	white	+$0
LU	soft white	+$0

Close-out, Bottom TW404.

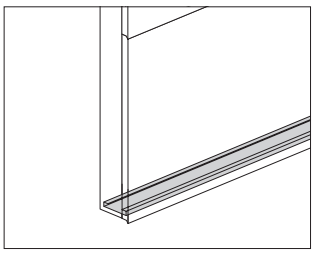

Product Information

Description

This plastic close-out finishes the gap between the architectural wall and tiles at the bottom of rail-attached stiles. It can be field-cut to match the width of the wall. Attachment hardware included.

Dimensions

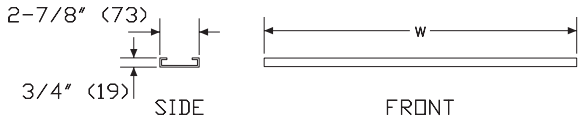

Specification Information

Step 1.

TW404.

Step 2. Width

18	18" wide
24	24" wide
36	36" wide
48	48" wide
60	60" wide
72	72" wide
84	84" wide
96	96" wide

Step 3. Application

A	not for use next to bed tile
B	for use next to bed tile

Prices for Steps 1-3.

		A	B
TW404.	**18**	$32	32
	24	$35	35
	36	$38	38
	48	$41	41
	60	$52	52
	72	$60	60
	84	$68	68
	96	$81	81

Step 4. Surface Finish

91	white	+$0
LU	soft white	+$0

Close-out, Sloped Cabinet Top TW406.

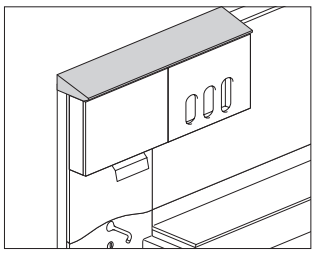

Product Information

Description

This steel sloped top finishes the top of a wardrobe cabinet, storage cabinet, glove cabinet, or paper towel cabinet. Close-out can span multiple cabinets.

Notes

Specify 6″ deep option (06) for storage cabinet, glove cabinet, or paper towel cabinet.

Specify 9″ deep option (09) for storage cabinet or glove and paper combo cabinet.

Specify 13″ deep option (13) for 13″-deep wardrobe cabinet, storage cabinet, or glove and paper combo cabinet.

Specify 21″ deep option (21) for 21″-deep wardrobe cabinet.

Dimensions

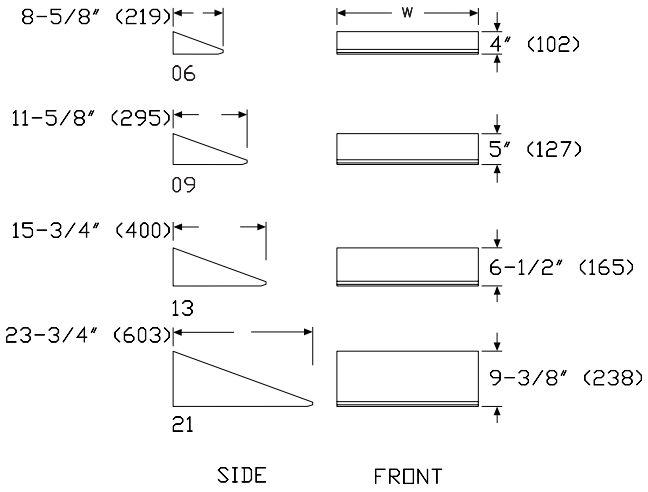

Specification Information

Step 1.

TW406.

Step 2. Depth

06	6″ deep
09	9″ deep
13	13″ deep
21	21″ deep

Step 3. Width

For 6″ deep (06)

18	18″ wide
24	24″ wide
30	30″ wide
36	36″ wide
42	42″ wide
48	48″ wide
54	54″ wide
60	60″ wide
66	66″ wide
72	72″ wide
84	84″ wide
96	96″ wide

For 9″ deep (09) or 13″ deep (13)

18	18″ wide
24	24″ wide
30	30″ wide
36	36″ wide
42	42″ wide
48	48″ wide
54	54″ wide
60	60″ wide
66	66″ wide
72	72″ wide

For 21″ deep (21)

24	24″ wide

Prices for Steps 1-3.

		18	24	30	36	42	48
TW406.	**06**	$83	90	94	100	103	106
	09	$87	97	99	106	123	139
	13	$104	117	130	145	155	171
	21	—	$163	—	—	—	—

Close-out, Sloped Cabinet Top

continued

	54	60	66	72	84	96
TW406. 06	$110	114	121	126	130	135
09	$146	153	170	188	—	—
13	$193	216	238	259	—	—

Step 4. Surface Finish		
91	white	+$0
LU	soft white	+$0

Grommet, Close-out TW409.

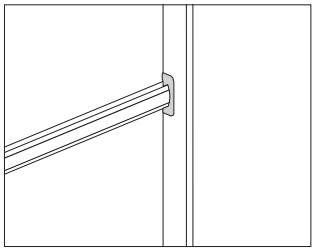

Product Information

Description

This individual grommet attaches to a side close-out with cutouts to fill the gap when the wall rail extends past the close-out.

Dimensions

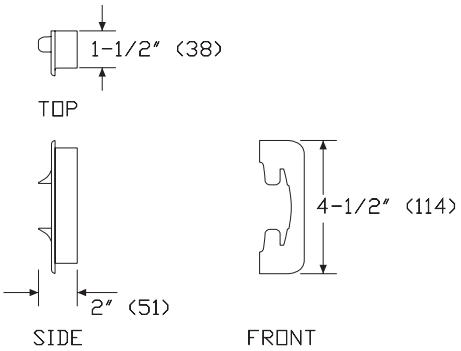

Specification Information

Step 1.

TW409.	$22

Step 2. Surface Finish

Solid-Color

91	white	+$0

Linen Cart TW501.

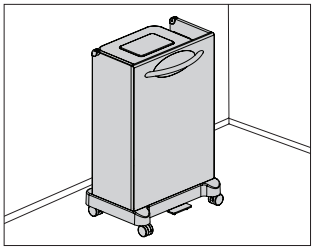

Product Information

Description

This cart holds linens and has a top ring that accommodates a standard "blue" linen bag. It docks below a work surface with linen cart tile. Front and side panels are 3D laminate. Durawrap™ 3D laminate is a 99.9% PVC-free material. Side panels are 91 white 3D laminate. Top ring and pull finish are metallic silver. Lid, foot pedal, and base finish are cool grey neutral.

Notes

Foot pedal is on front of cart.

Cart lid opens to the left.

Cart comes with side panels in white (91) Durawrap 3D laminate.

Cart cannot be cleaned using a cart wash.

Specify the following products separately:

- Cantilever (TW219.)
- Linen cart tile (TW130.)
- Work surface (TW210.)

Dimensions

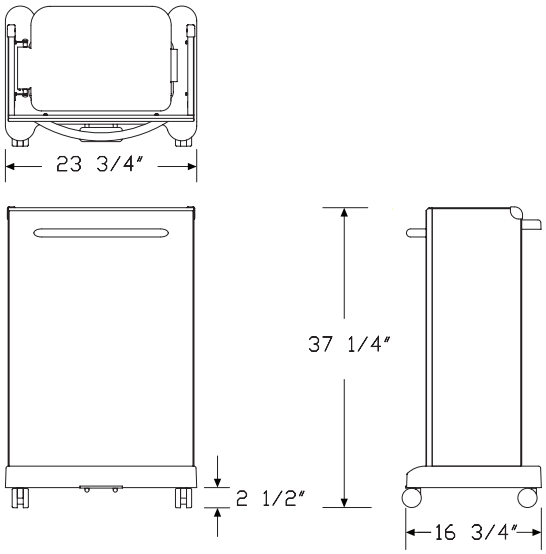

Cart with lid and foot pedal

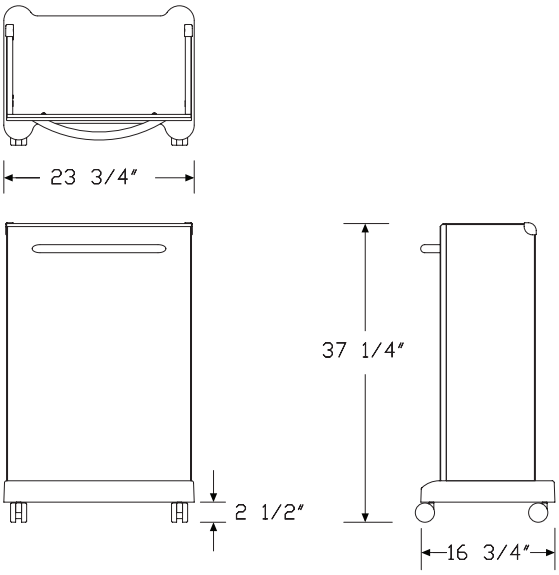

Cart with no lid and no foot pedal

Specification Information
Step 1.
TW501. A

Step 2. Type	
N	no lid or foot pedal A
M	lid and no foot pedal A
L	lid and foot pedal A

Step 3. Surface Material	
A	durawrap™ 3D laminate A
P	3D laminate A

Prices for Steps 1-3.

		A	P
TW501.	**N**	$1348	1310
	M	$1610	1566
	L	$1754	1705

Step 4. Side Finish		
91	white A	+$0

Step 5. Front Finish		
Solid-Color		
For durawrap™ 3D laminate (A)		
91	white A	+$0
LU	soft white A	+$0
Wood-Grain		
For durawrap™ 3D laminate (A)		
76	light brown walnut A	+$10
HX	aged cherry A	+$10
HM	natural maple A	+$10
PX	Nemschoff light cherry A	+$10
OG	honey maple A	+$10
For 3D laminate (P)		
120	light maple woodgrain 3D laminate A	+$0
121	golden maple woodgrain 3D laminate A	+$0
122	brown walnut woodgrain 3D laminate A	+$0
123	chocolate walnut woodgrain 3D laminate A	+$0
124	warm cherry woodgrain 3D laminate A	+$0
125	light teak woodgrain 3D laminate A	+$10
126	basic white 3D laminate A	+$0

Accessory Rail TW700.

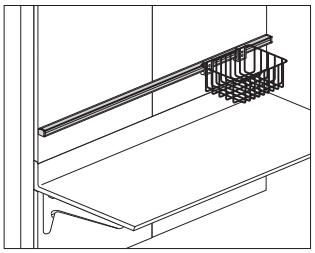

Product Information

Description

This aluminum rail attaches to the front of a tile to hold rail-mounted components. It has a satin oxide laminate insert and grey end caps. Attachment hardware included.

Notes

Rail can match tile width, or span multiple tiles. For easy removal of tiles, accessory rail width should be equal to or less than the width of the tile it's attached to.

Dimensions

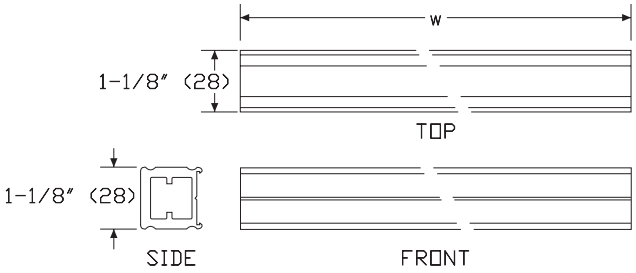

Specification Information

Step 1.

TW700.

Step 2. Width

18	18" wide
24	24" wide
30	30" wide
36	36" wide
42	42" wide
48	48" wide

Prices for Steps 1-2.

TW700.	**18**	$75
	24	$99
	30	$125
	36	$149
	42	$174
	48	$196

Universal Rail Clamp TW705.

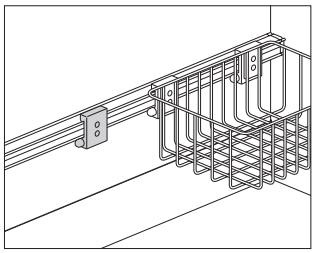

Product Information

Description

This universal aluminum clamp attaches to an accessory rail and has holes for attaching customer supplied components. It has a push button mechanism that locks the clamp in place and allows for easy attachment and removal.

Notes

Order accessory rail (TW700.) separately.

Dimensions

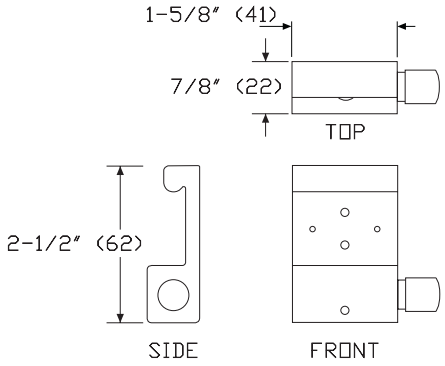

Specification Information

Step 1.

TW705.	$127

Soap and Sanitizer Mounting Bracket TW706.

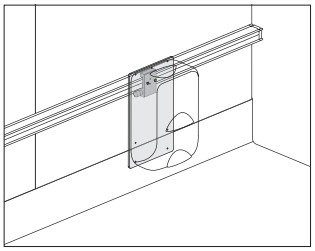

Product Information

Description

This aluminum mounting bracket is designed for use with customer supplied components such as soap and sanitizer dispensers or sharps containers. It includes 1 universal rail clamp (TW705.) for attachment. The clamp has a push-button locking mechanism for easy attachment and removal.

Notes

Order accessory rail (TW700.) separately. Screws must be customer supplied.

Dimensions

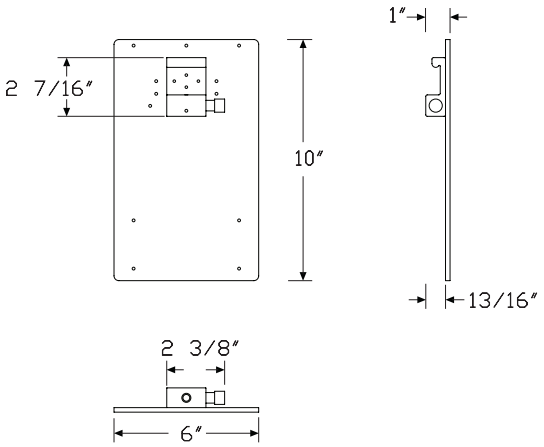

Specification Information

Step 1.

TW706.	$414

Paper Towel Dispenser Mounting Bracket TW707.

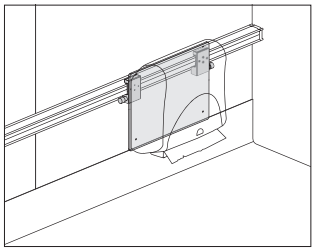

Product Information

Description

This aluminum mounting bracket is designed for use with customer supplied paper towel dispensers. It includes 2 universal rail clamps (TW705.) for attachment. The clamps have a push-button locking mechanism for easy attachment and removal.

Notes

Order accessory rail (TW700.) separately. Screws and dispensers must be customer supplied.

Wide paper towel dispenser dimensions are approximately 10″ wide x 5″ deep x 8″ high. Tall dispenser dimensions are approximately 13″ wide x 9″ deep x 13″ high.

See Compass™ planning guide for additional specification information.

Dimensions

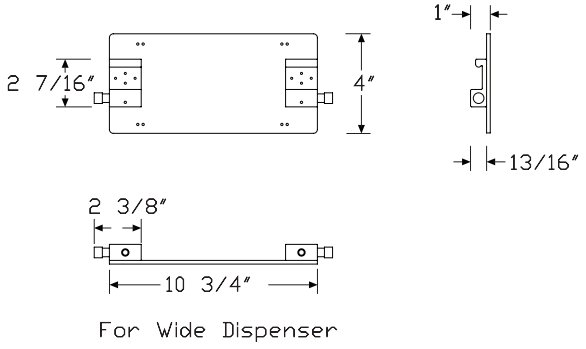

For Wide Dispenser

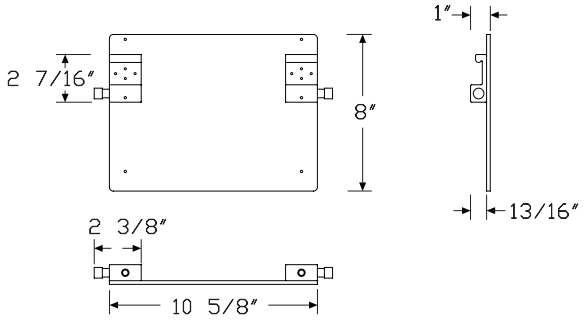

For Tall Dispenser

Specification Information

Step 1.

TW707.

Step 2. Size

A	used with wide paper towel dispensers
B	used with tall paper towel dispensers

Prices for Steps 1-2.

TW707.	**A**	$467
	B	$467

Utility Basket TW720.

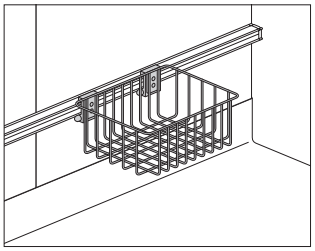

Product Information

Description

This powder-coated wire basket attaches to an accessory rail to hold small items. It includes 2 rail clamps for attachment. The clamps have a push button mechanism that locks the clamp in place and allows for easy attachment and removal. Finish is off-white.

Notes

Order accessory rail (TW700.) separately.

Dimensions

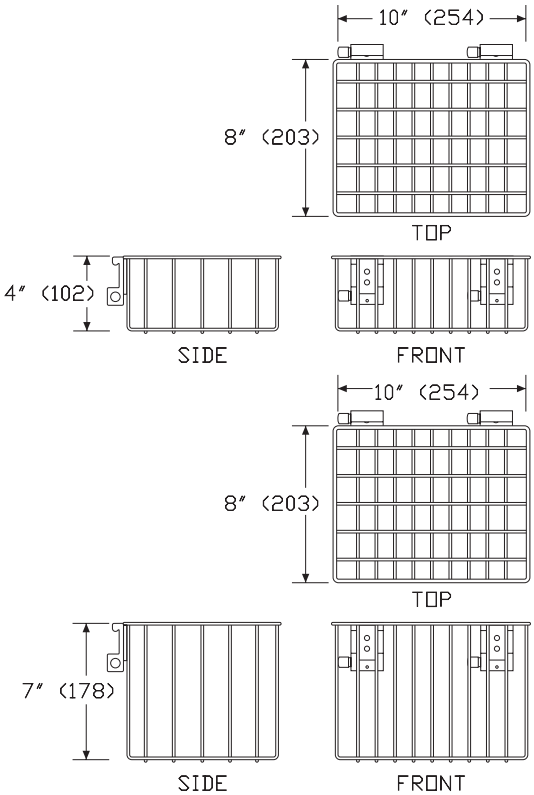

Specification Information

Step 1.

TW720.

Step 2. Size

01	4″ high x 8″ deep x 10″ wide
02	7″ high x 8″ deep x 10″ wide

Prices for Steps 1-2.

TW720.	**01**	$428
	02	$444

Sharps Container Holder TW722.

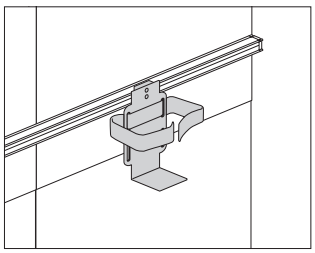

Product Information

Description

This painted holder attaches to an accessory rail and has a strap for holding a variety of customer-supplied sharps containers. It includes a rail clamp for attachment. The clamp has a push button mechanism that locks the clamp in place and allows for easy attachment and removal. Finish is off-white.

Notes

Order accessory rail (TW700.) separately.

Dimensions

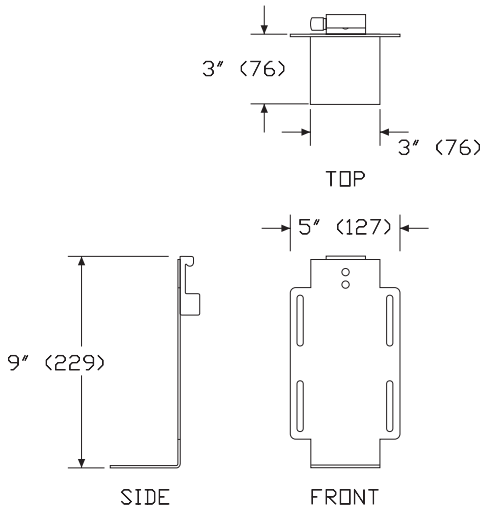

Specification Information

Step 1.

TW722.	$315

Vacuum Bottle Slide TW723.

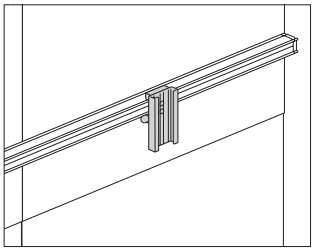

Product Information

Description

This aluminum slide attaches to an accessory rail and accepts a customer-supplied vacuum bottle with mounting ring. It includes a rail clamp for attachment. The clamp has a push button mechanism that locks the clamp in place and allows for easy attachment and removal.

Notes

Order accessory rail (TW700.) separately.

Dimensions

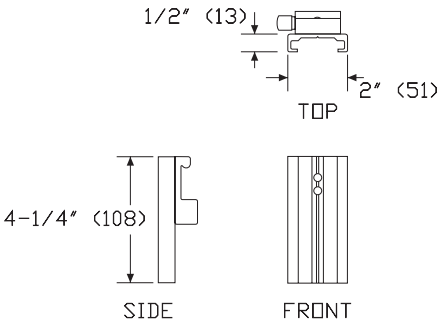

Specification Information

Step 1.

TW723.	$154

Glove Box Holder TW724.

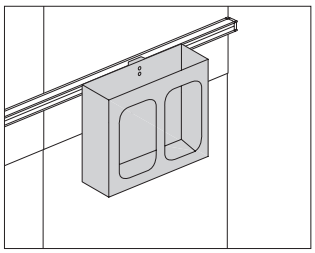

Product Information

Description

This holder attaches to an accessory rail and holds 2 10″ x 5″ x 3″ boxes of gloves. It includes a rail clamp for attachment. The clamp has a push button mechanism that locks the clamp in place and allows for easy attachment and removal. Finish is off-white

Notes

Order accessory rail (TW700.) separately.

Dimensions

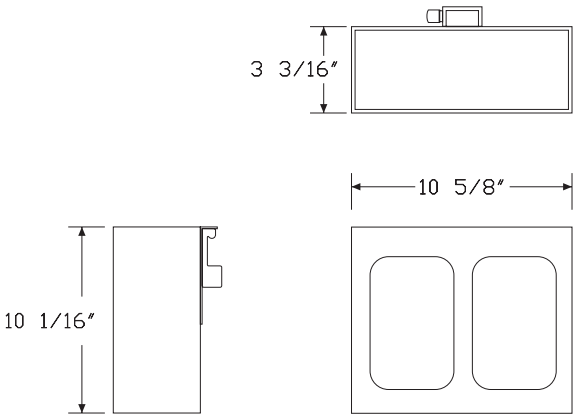

Specification Information

Step 1.

TW724.	$530

3 Clip Organizer TW725.

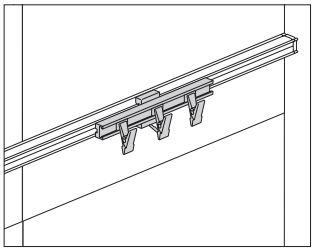

Product Information

Description

This aluminum organizer attaches to an accessory rail and has 3 stainless steel clips for holding IV bags, catheters, and other items. It includes a rail clamp for attachment.

Notes

Order accessory rail (TW700.) separately.

Dimensions

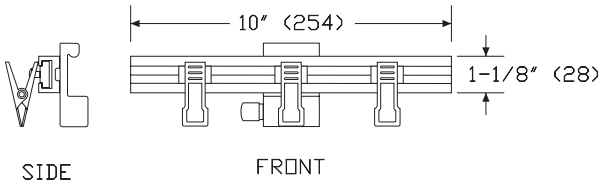

Specification Information

Step 1.

TW725.	$335

Instrument Mounting Bracket TW726.

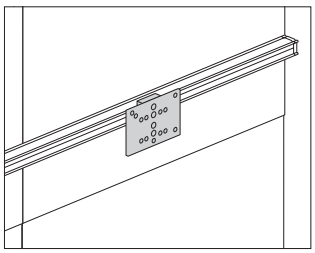

Product Information

Description

This aluminum bracket attaches to an accessory rail to hold a customer-supplied sphygmomanometer, ophthalmoscope with holder, or thermometer with holder. It is designed for products that adhere to the Fairfield standards. The bracket includes a rail clamp for attachment. The clamp has a push button mechanism that locks the clamp in place and allows for easy attachment and removal.

Notes

Order accessory rail (TW700.) separately.

Dimensions

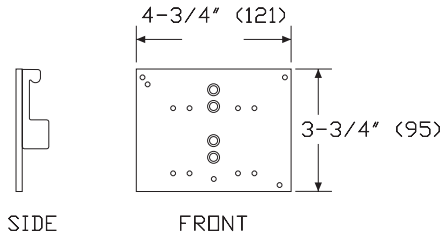

Specification Information

Step 1.

TW726.	$329

Sphygmomanometer Basket TW727.

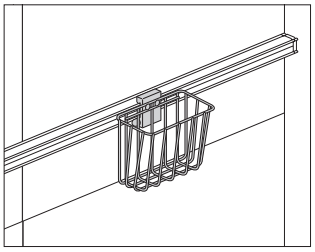

Product Information

Description

This stainless steel wire basket attaches to an accessory rail to hold a customer-supplied blood pressure arm cuff or other small items. It includes a rail clamp for attachment. The clamp has a push button mechanism that locks the clamp in place and allows for easy attachment and removal.

Notes

Order accessory rail (TW700.) separately.

Dimensions

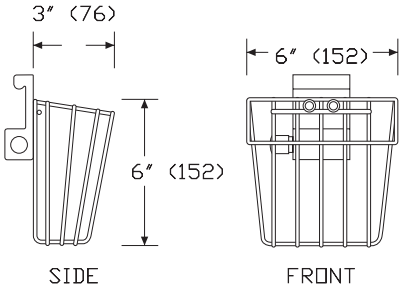

Specification Information

Step 1.

TW727.	$276

Mounting Clamp TW740.

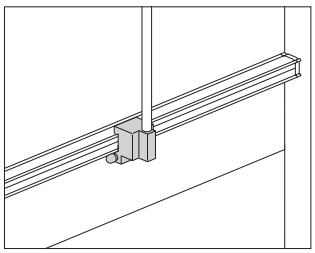

Product Information

Description

This aluminum clamp attaches to an accessory rail to hold components with a post-mount attachment method. It has a push button mechanism that locks the clamp in place and allows for easy attachment and removal.

Notes

Order the following products separately:

- Accessory rail (TW700.)
- Chart holder (TW746.)
- IV pole (TW743.)
- Utility Hook (TW747.)

Dimensions

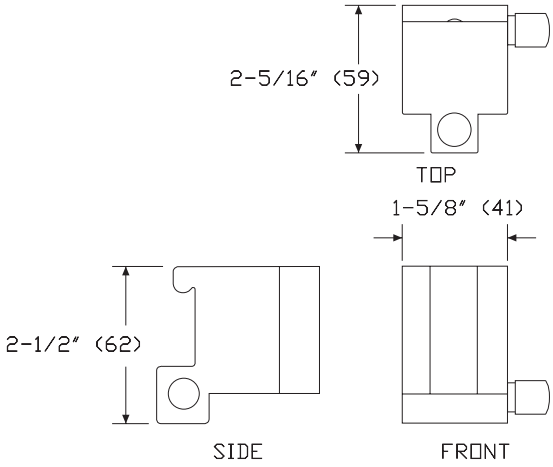

Specification Information

Step 1.

TW740.	$163

IV Pole TW743.

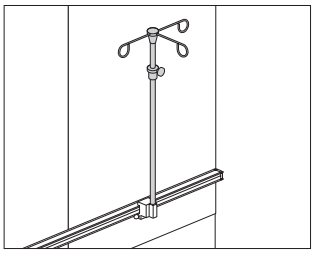

Product Information

Description

This adjustable stainless steel pole holds up to 3 IV bags and has a post for attaching to a mounting clamp.

Notes

Order accessory rail (TW700.) and mounting clamp (TW740.) separately.

Dimensions

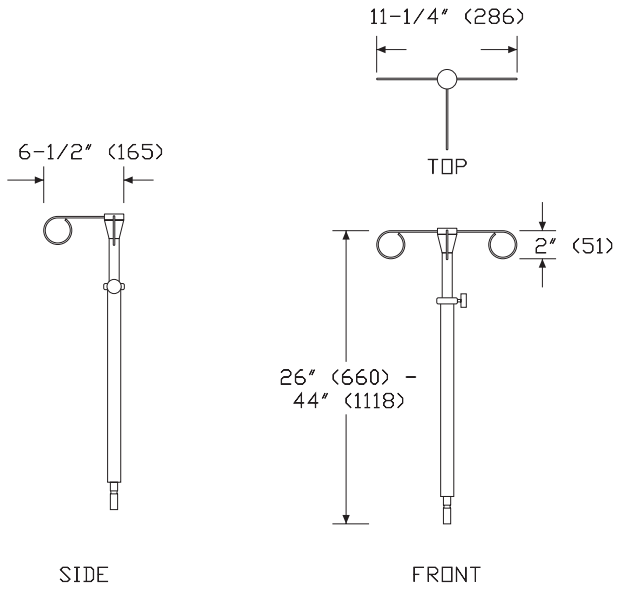

Specification Information

Step 1.

TW743.24	$540

Chart Holder TW746.

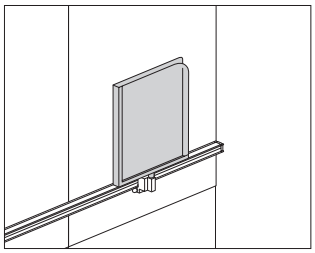

Product Information

Description

This powder-coated holder has a clear acrylic front and holds a chart or other paper items. It has a post for attaching to a mounting clamp. Finish is off-white.

Notes

Order accessory rail (TW700.) and mounting clamp (TW740.) separately.

Dimensions

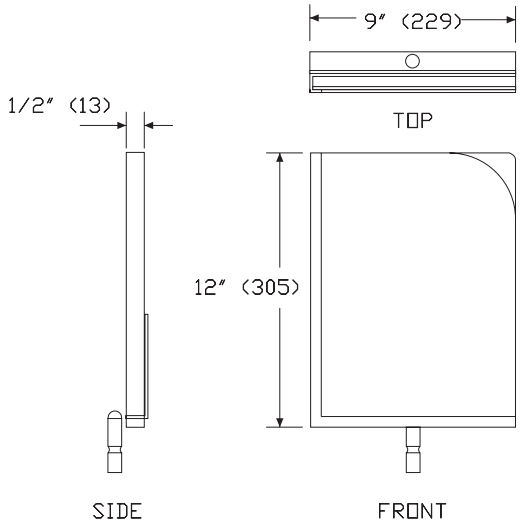

Specification Information

Step 1.

TW746.	$379

Utility Hook TW747.

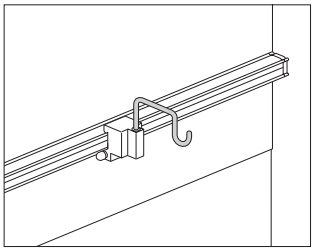

Product Information

Description

This stainless steel hook holds tubing, charts, catheters, or other equipment. It has a post for attaching to a mounting clamp.

Notes

Order accessory rail (TW700.) and mounting clamp (TW740.) separately.

Dimensions

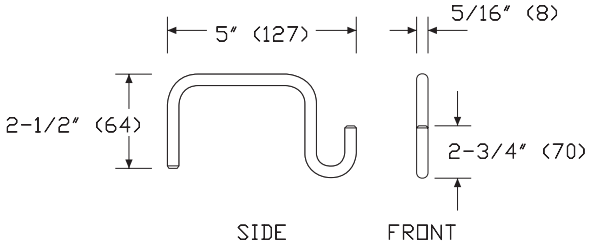

Specification Information

Step 1.

TW747.	$99

Marker Board TW800.

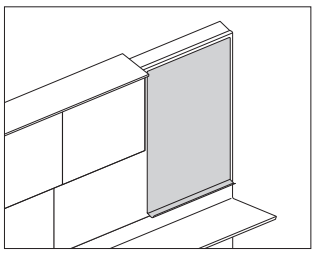

Product Information

Description

This marker board attaches with screws to the front of a face tile to provide an erasable writing surface using dry-erase markers. It has a tray at the bottom for holding markers and erasers. Finish is white.

Dimensions

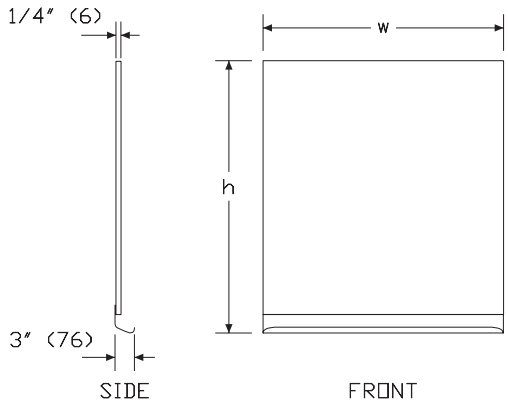

Specification Information

Step 1.

TW800.

Step 2. Height

20 20" high

40 40" high

Step 3. Width

24 24" wide

36 36" wide

Prices for Steps 1-3.

		24	**36**
TW800.	**20**	$302	359
	40	$501	640

Display Shelf TW810.

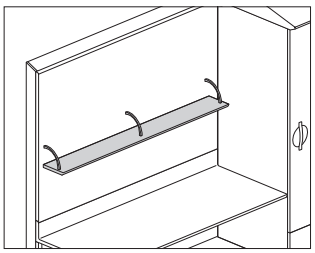

Product Information

Description

This shelf attaches to the front of a face tile to provide small item storage and display. It is available in 3D laminate or Corian® with metallic silver supports. Durawrap™ 3D laminate is a 99.9% PVC-free material. Attachment hardware included.

Dimensions

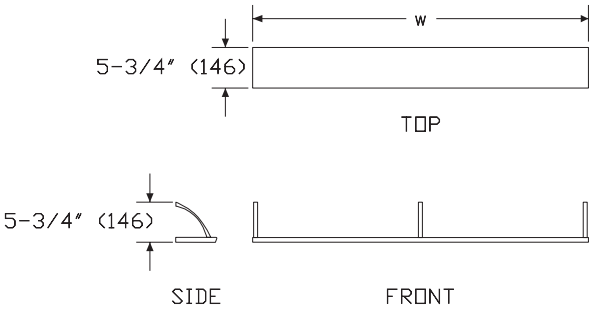

Specification Information

Step 1.

TW810.06

Step 2. Width

18	18" wide
24	24" wide
36	36" wide
48	48" wide

Step 3. Surface Material

A	durawrap™ 3D laminate
K	corian
P	3D laminate A

Prices for Steps 1-3.

		A	K	P
TW810.06	**18**	$186	447	181
	24	$203	470	188
	36	$263	586	242
	48	$288	728	263

Step 4. Surface Finish

Solid-Color

For durawrap™ 3D laminate (A)

91	white	+$0
LU	soft white	+$0

Wood-Grain

For durawrap™ 3D laminate (A)

76	light brown walnut	+$10
HX	aged cherry	+$10
HM	natural maple	+$10
PX	Nemschoff light cherry	+$10
OG	honey maple	+$10

For corian (K)		
1N	canyon	+$130
CQ	glacier white	+$0
QB	bisque	+$0
1E	flint	+$150
1S	savannah	+$130
1U	sahara	+$130
3I	mojave	+$130
4I	sandstone	+$130
58	cameo white	+$0
IQ	aurora	+$130
OQ	silt	+$130
Q1	vanilla	+$0
7I	raffia	+$150
BLP	blue pebble	+$150

For 3D laminate (P)		
120	light maple woodgrain 3D laminate A	+$0
121	golden maple woodgrain 3D laminate A	+$0
122	brown walnut woodgrain 3D laminate A	+$0
123	chocolate walnut woodgrain 3D laminate A	+$0
124	warm cherry woodgrain 3D laminate A	+$0
125	light teak woodgrain 3D laminate A	+$10
126	basic white 3D laminate A	+$0

Index by Product Name

Compass™ System	
1" Conduit Electrical Junction Box	page(s) 41
3 Clip Organizer	108
Above-Sink Tile	21
Above-Sink Tile, ADA-Compliant Sink	23
Accessory Rail	100
Bed Tile	16
Cantilever	46
Chart Holder	113
Chase	42
Chase Tile	43
Close-out, Bottom	94
Close-out, Side	92
Close-out, Sloped Cabinet Top	95
Close-out, Top	93
Display Shelf	116
Drawer and Printer Module	76
Drawer Liner	89
Drawer Module	71
Electrical 4x4 Junction Box Attachment Bracket	39
Electrical Junction Box Attachment Bracket	38
Face Tile	14
Faucet	58
Full Height Storage Cabinet	66
Glove and Paper Combo Cabinet	87
Glove Box Holder	107
Glove Cabinet	83
Grommet, Close-out	97
Half-Height Storage Cabinet	69
Instrument Mounting Bracket	109
IV Pole	112
Linen Cart	98
Linen Cart Tile	25
Lower Storage Cabinet with Doors	73
Marker Board	115
Mounting Clamp	111
Nurse Call Trim Plate	35
Paper Towel Cabinet	85
Paper Towel Dispenser Mounting Bracket	103
Rotating Work Surface Arm	48
Rotating Work Surface Support Bracket	47
Rotating Work Surface Tile	20
Rotating Work Surface Top	49
Sconce Light Junction Box Attachment Bracket	37
Sconce Light Trim Plate	34
Sharps Container Holder	105
Sidesplash	61
Sidesplash, ADA Compliant	62
Sink, 13" Deep	51
Sink, 21" Deep	52
Sink, ADA Compliant	53
Sink, Basic 13" Deep	60
Sink Enclosure	54
Sink Enclosure, ADA-Compliant Sink	56
Soap and Sanitizer Mounting Bracket	102
Sphygmomanometer Basket	110
Stile, Chase Tile	13
Stile Connector Kit	12
Stile Lockdown	11
Stile, Rail-Attached	9
Storage and Printer Module	79
Storage Cabinet	81
TV/Monitor Support Bracket	40
Universal Rail Clamp	101
Utility Basket	104
Utility Hook	114
Utility Support Rail	36
Utility Tile, Electrical, Full-Height Upper	30
Utility Tile, Electrical, Lower	26
Utility Tile, Electrical, Partial-Height Upper	28
Utility Tile, Light	32
Vacuum Bottle Slide	106
Wall Anchors	8
Wall Rail	5
Wall Rail End Cap	7
Wall Rail Insert	6
Wardrobe Cabinet	63
Waste Receptacle Cabinet	90
Work Surface	44
Work Surface Tile	18

Index by Product Number

TW100.	Wall Rail	page(s) 5
TW102.	Wall Rail Insert	6
TW104.	Wall Rail End Cap	7
TW109.	Wall Anchors	8
TW110.	Stile, Rail-Attached	9
TW112.	Stile Lockdown	11
TW113.	Stile Connector Kit	12
TW114.	Stile, Chase Tile	13
TW120.	Face Tile	14
TW122.	Bed Tile	16
TW124.	Work Surface Tile	18
TW126.	Rotating Work Surface Tile	20
TW128.	Above-Sink Tile	21
TW129.	Above-Sink Tile, ADA-Compliant Sink	23
TW130.	Linen Cart Tile	25
TW140.	Utility Tile, Electrical, Lower	26
TW141.	Utility Tile, Electrical, Partial-Height Upper	28
TW142.	Utility Tile, Electrical, Full-Height Upper	30
TW155.	Utility Tile, Light	32
TW156.	Sconce Light Trim Plate	34
TW159.	Nurse Call Trim Plate	35
TW170.	Utility Support Rail	36
TW171.	Sconce Light Junction Box Attachment Bracket	37
TW172.	Electrical Junction Box Attachment Bracket	38
TW174.	Electrical 4x4 Junction Box Attachment Bracket	39
TW175.	TV/Monitor Support Bracket	40
TW176.	1" Conduit Electrical Junction Box	41
TW180.	Chase	42
TW182.	Chase Tile	43
TW210.	Work Surface	44
TW211.		
TW219.	Cantilever	46
TW221.	Rotating Work Surface Arm	48
TW222.	Rotating Work Surface Top	49
TW229.	Rotating Work Surface Support Bracket	47
TW230.	Sink, 13" Deep	51
TW231.	Sink, 21" Deep	52
TW232.	Sink Enclosure	54
TW233.	Sink Enclosure, ADA-Compliant Sink	56
TW234.	Sink, Basic 13" Deep	60
TW235.	Sink, ADA Compliant	53
TW239.	Faucet	58
TW242.	Sidesplash	61
TW243.	Sidesplash, ADA Compliant	62
TW300.	Wardrobe Cabinet	63
TW302.	Full Height Storage Cabinet	66
TW305.	Half-Height Storage Cabinet	69
TW310.	Drawer Module	71
TW312.	Lower Storage Cabinet with Doors	73
TW314.	Drawer and Printer Module	76
TW315.	Storage and Printer Module	79
TW316.	Waste Receptacle Cabinet	90
TW320.	Storage Cabinet	81
TW322.	Glove Cabinet	83
TW324.	Paper Towel Cabinet	85
TW326.	Glove and Paper Combo Cabinet	87
TW390.	Drawer Liner	89
TW400.	Close-out, Side	92
TW402.	Close-out, Top	93
TW404.	Close-out, Bottom	94
TW406.	Close-out, Sloped Cabinet Top	95
TW409.	Grommet, Close-out	97
TW501.	Linen Cart	98
TW700.	Accessory Rail	100
TW705.	Universal Rail Clamp	101
TW706.	Soap and Sanitizer Mounting Bracket	102
TW707.	Paper Towel Dispenser Mounting Bracket	103
TW720.	Utility Basket	104
TW722.	Sharps Container Holder	105
TW723.	Vacuum Bottle Slide	106
TW724.	Glove Box Holder	107
TW725.	3 Clip Organizer	108
TW726.	Instrument Mounting Bracket	109
TW727.	Sphygmomanometer Basket	110
TW740.	Mounting Clamp	111
TW743.	IV Pole	112
TW746.	Chart Holder	113
TW747.	Utility Hook	114
TW800.	Marker Board	115
TW810.	Display Shelf	116

20-Day or Less/Assigned Lead-Time Order Information — Healthcare

20-Day or Less/Assigned Lead-Time Programs

20-day or less and assigned lead-time products are designed for established Herman Miller dealers with pre-approved credit.

Products are distributed from multiple manufacturing facilities across the United States. All products and options not designated by an Assigned Lead-Time icon A will ship in 20 business days or less after being acknowledged by Herman Miller. Products and options designated by an A are on the assigned lead-time program and will ship in 20 days, less than 20 days, or more than 20 days from order acknowledgement.

Ordering Procedure

Please place orders through Order Manager. If this is not available to you, place orders through mail or fax. Verbal purchase orders will not be accepted.

Order Entry fax number: (616) 654 3085.

For more information, contact your Customer Care representative at: (866) 854 3048 EXT 3400

Shipments and Delivery

Per Herman Miller Terms and Conditions.

Changes and Cancellation

Per Herman Miller Terms and Conditions.

For more information about our products and services or to see a list of dealers, please visit us at HermanMiller.com or call (800) 851 1196.

© 2019 Herman Miller, Inc., Zeeland, Michigan

Distribution Rights

Working together since 1956, Herman Miller and Vitra are the authentic sources of designs by Charles and Ray Eames, Alexander Girard, and George Nelson. All the designs shown in this book are protected by law. Herman Miller has obtained all rights to make and sell these designs. Also, Herman Miller holds exclusive worldwide manufacturing and distribution rights for these products with the following exceptions:

Charles and Ray Eames, George Nelson, and Alexander Girard—Worldwide distribution rights for furniture in all areas except Europe and the Middle East. For those areas, please contact Vitra.

Isamu Noguchi—Worldwide distribution rights for the Noguchi Rudder Table. Distribution rights for the Noguchi Table in North America and Central America only. For all other areas, please contact Vitra.

Magis—Exclusive distribution rights in the US and Canada. For all other areas, please contact Magis.

Mattiazzi—Exclusive distribution rights in the US and Canada. For all other areas, please contact Mattiazzi.

® HermanMiller, ☻, Action Office, Aeron, Aside, Avive, Canvas Office Landscape, Caper, Celle, Co/Struc, Eames, Embody, Equa 2, Ergon 3, Ethospace, Exclave, Fine-Tune, FlexFront, Formcoat, Ground Cloth, Herman Miller Healthcare, Layout Studio, Maharam, Meridian, Mirra, Passage, Pellicle, Perspectives, PostureFit, Quadrant, Resolve, Sayl, Setu, Thrive, Tu, Y-Tower, and Z-Axis are among the registered trademarks of Herman Miller, Inc., and its owned subsidiaries.

™ AireWeave, Bubbletack, Cellular Suspension, Compass, Connect, Cosm, DOT, Durawrap, Everywhere, Flex-Edge, Hopsak 2, Intent, Iota, Keyless Entry, Latitude, Lino, Lyris 2, Mora, Motia, Multiscrim, Nelson, Nevi, Pedastools, Plex, Renew, Stackable, Swoop, TriFlex, Twist, Verus and Vista are among the trademarks of Herman Miller, Inc., and its owned subsidiaries.

SChemsurf® is a registered trademark of Wilsonart International.

Corian® is a registered trademark of E.I. du Pont de Nemours and Company Corporation.

FLEXNET™ is a trademark of Milliken & Company.

Floor Saver Glide® is a registered trademark of Carpin Manufacturing, Inc.

Geiger® is a registered trademark of Geiger International.

Microsoft® and Natural® Keyboard are registered trademarks of Microsoft Corporation.

Place Textiles® is a registered trademark of Place Textiles.