Assembly Instructions

Inquire® Tables

T-Base

March 2011

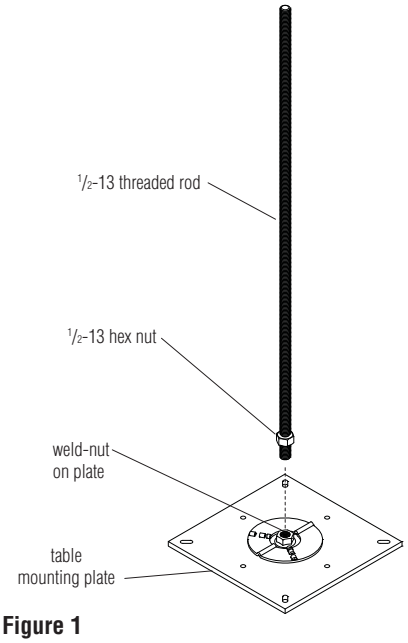

Figure 1

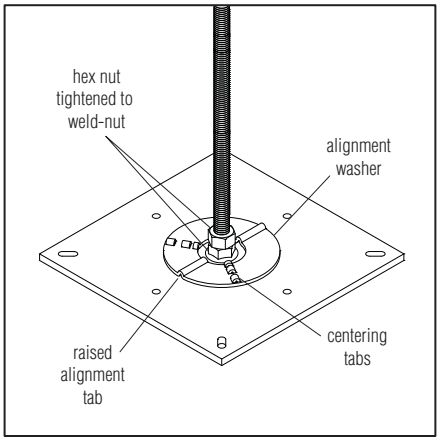

Detail A

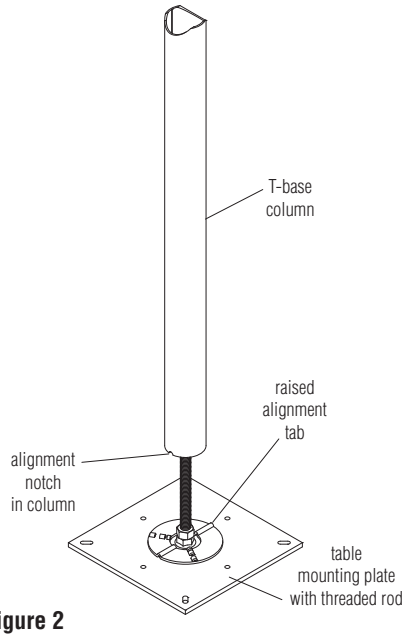

Figure 2

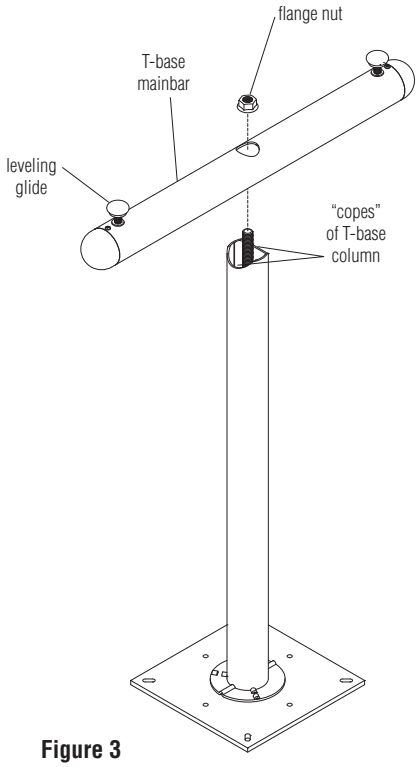

Figure 3

1. Carefully unpack all contents and begin by locating the square mounting plate, the 1/2 -13 threaded rod, and 1/2-13 hex nut.

2. Twist the hex nut onto the threaded rod until 1/2" of the threaded rod protrudes beyond the bottom-side of the hex nut (Figure 1).

3. Orient the square mounting plate as shown and turn the threaded rod with hex nut into the weld-nut on the mounting plate until the hex nut contacts the weld-nut, or the threaded rod bottoms-out on the mounting plate (Figure 1). Snug tighten the hex nut against the weld-nut with a 3/4" open wrench to secure the threaded rod to the mounting plate (Detail A).

4. Position the T-base column over the threaded rod and center it on the alignment washer on the mounting plate. Rotate the column around until the alignment notches of the column are seated with the raised alignment tabs on the alignment washer (Figure 2 & Detail A).

5. Position the T-base mainbar over the T-base column, aligning the center hole in the mainbar with the threaded rod and set mainbar down until it rests into the copes in the T-base column. Make sure that the leveling glides in the mainbar are facing away from the mounting plate, as illustrated (Figure 3).

6. With the flange side of the nut toward the mainbar, hand-tighten the flange nut onto the threaded rod until snug. Assure that the mainbar is seated to the column, and the column is seated to the alignment washer properly, then tighten the flange nut with 3/4" deep well socket to 70-90 ft. lbs. of torque.

1330 Bellevue Street • P.O. box 8100 • Green Bay, WI 54308-8100 • Tel 1-800-424-2432 • www.ki.com

© 2011 KI All Rights Reserved • Litho in USA • Code KI-62328/HT/GT/0311

Furnishing Knowledge®

CAUTION

Assemble units as described herein only. To do otherwise may result in instability. All screws, nuts and bolts must be tightened securely and must be checked periodically after assembly. Failure to assemble properly, or to secure parts may result in assembly failure and personal injury.

7. Carefully lay table top upside down on a soft protective surface. One at a time, position T-base assemblies over table top, aligning mounting holes of square mounting plate with pre-drilled holes in underside of table surface (Figure 4).

8. Secure each T-base assembly to underside of table surface using four #12 x 1" screws per base. Take care to not over-tighten screws (Figure 4).

9. Carefully turn table to the upright position and adjust leveling glides in or out to achieve a level table top surface.

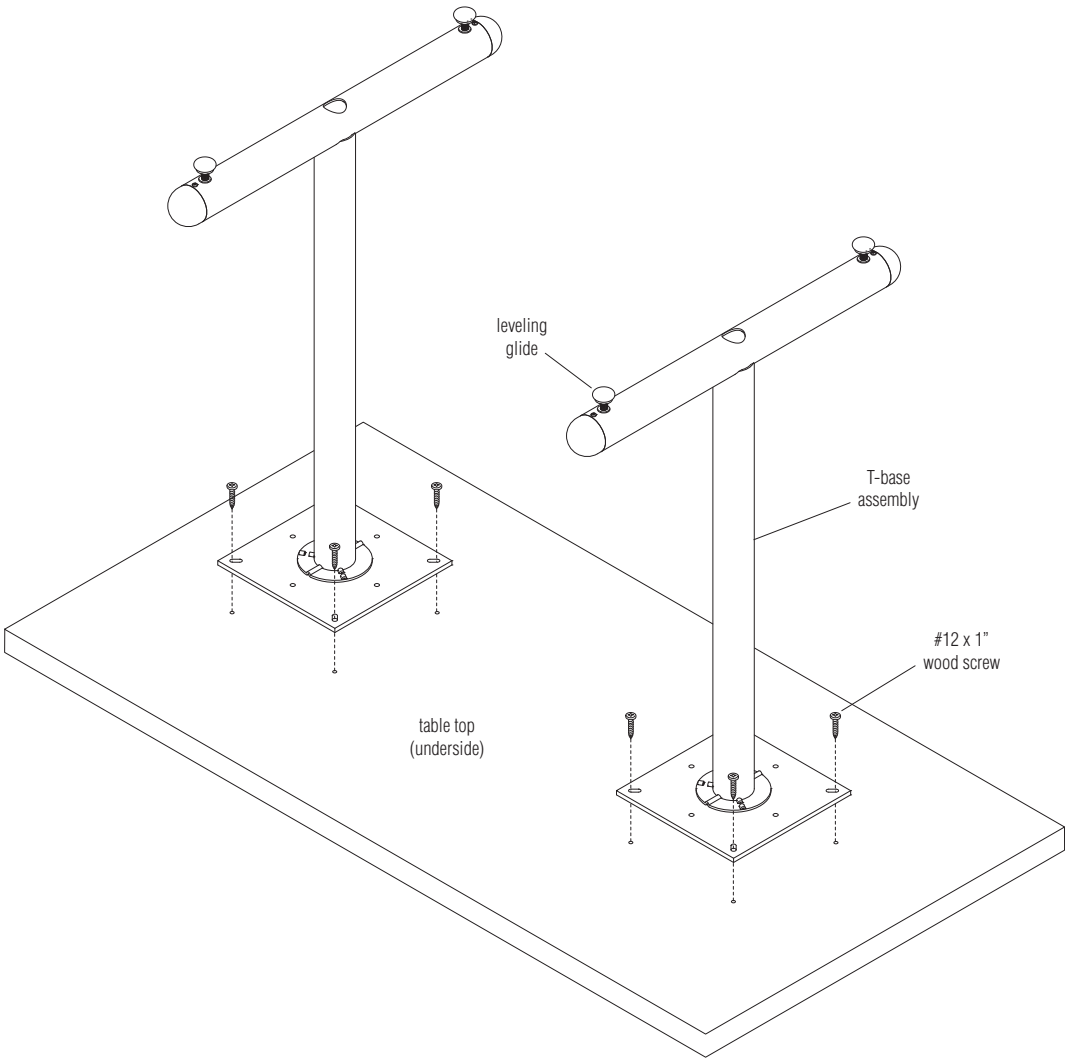

Figure 4