SELF CLOSING GLASS SLIDING DOOR SYSTEM (Door Weight 66 ~ 176 lbs) LM-80G

Item No.	LM-80G
Door Width	700~1200 mm (27-9/16"~47-1/4")
Door Thickness	8~12 mm
Door Weight	30~80 kg/Door (66~176 lbs/door)
Door Travel	Max. 1100 mm (in case of door width 1200 mm) Max. 43-5/16" (in case of door width 47-1/4")

- Self closing sliding door system – no electricity required
- Equipped with damper for smooth and soft closing, eliminating slamming.
- No-pre-drilled holes on glass needed for installation.
- Door catch included to hold door in fully open position.

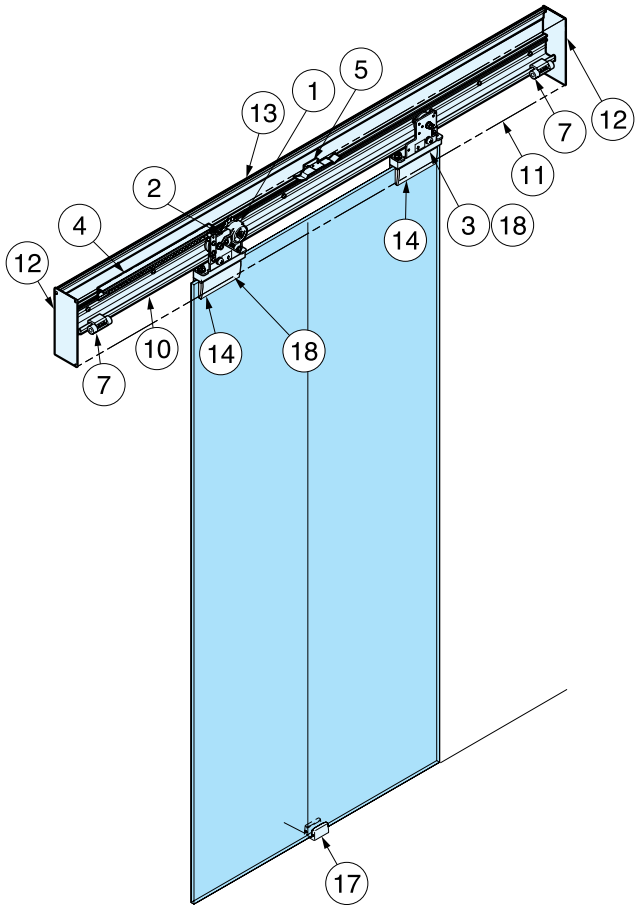

■ Door Stopper

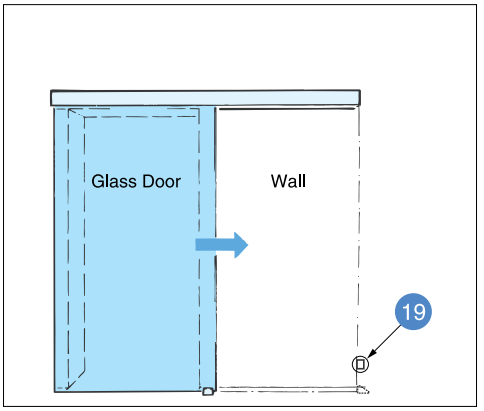

■ Speed Adjustment

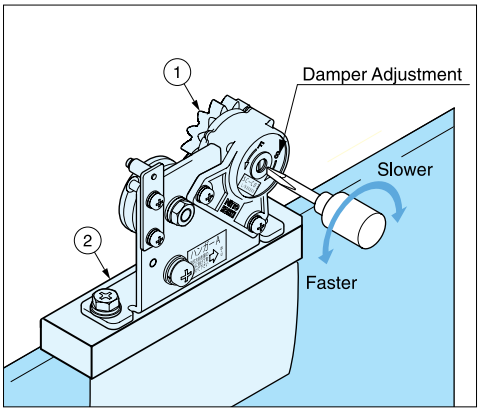

Closing speed adjustable by turning adjustment screw on damper.

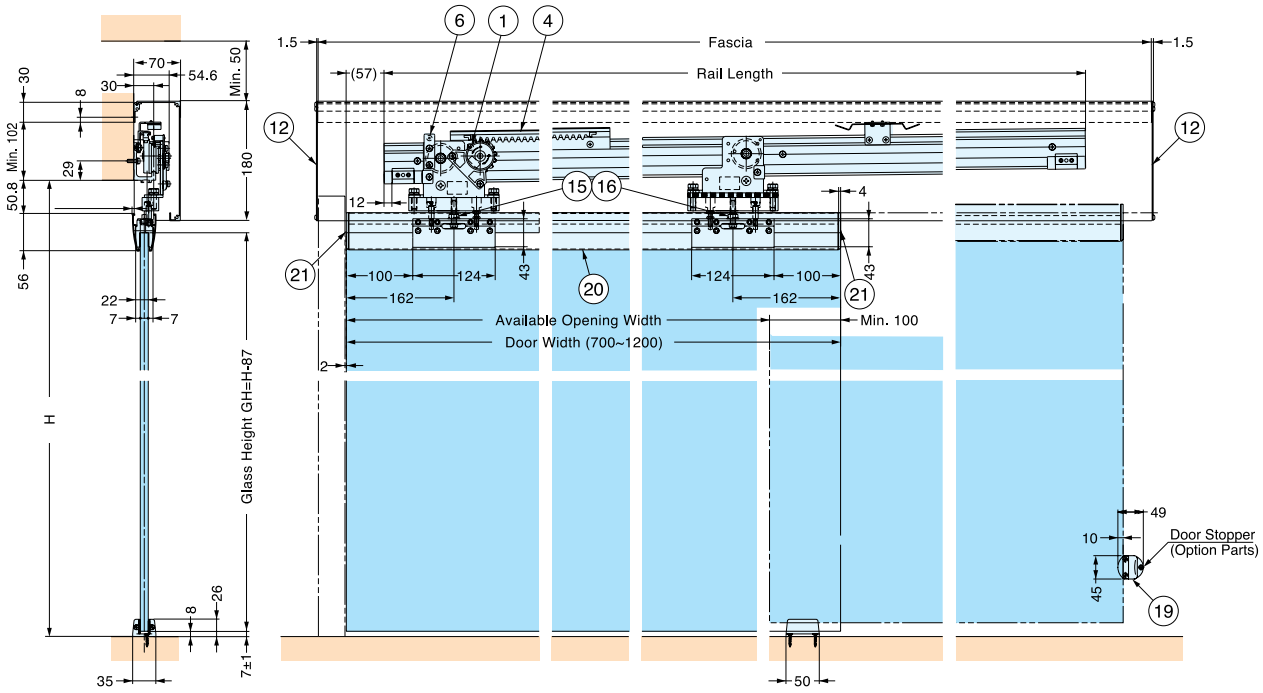

Part Details

No.	①	②	③	④	⑤	⑥	⑦
Name	Damper	Roller A	Roller B	Gear Rack	Spring	Stopper Roller	Door Stopper
Qty. / Set	1 pc	1 pc	1 pc	1 pc	1 pc	1 pc	2 pcs

No.	⑧	⑨	⑩	⑪	⑫	⑬	⑭
Name	Stopper Plate	Height Adjustment Spacer	Roller Rail (2200 mm)	Fascia (2350 mm)	Side Cover	Mounting Plate (For Fascia) (2350 mm)	Glass Bracket
							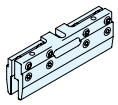
Qty. / Set	2 pcs	t1:15 pcs, t0.5:1 pc	1 pc	1 pc	1 pc ea. (Left & Right)	1 pc	2 pcs

No.	⑮	⑯	⑰	⑱	⑲	⑳	㉑
Name	Hanger Bolt	Nut	Bottom Guide	Bracket	Door Stoppar	Bracket cover	End Cap Set
	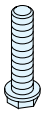		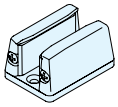	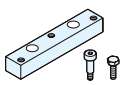		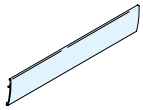	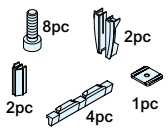
Qty. / Set	2 pcs	2 pcs	1 pc	2 pcs	1 pc	1 pc	1 set