SOFT-CLOSE HINGE INTRODUCTION

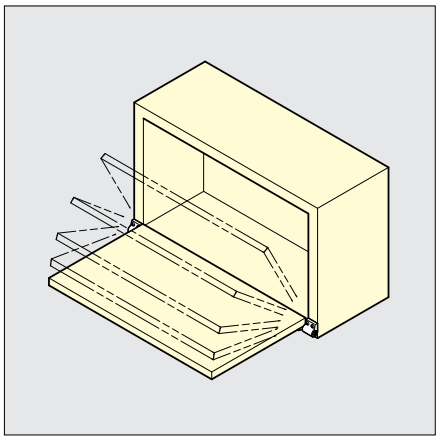

Damper hinges incorporate 2 functions into one piece of hardware: unidirectional dampening and hinge connectivity. These hinges do not have a strict load capacity, but instead a torque rating, which indicates the suitable range of torque for each model hinge.

If your box is already fabricated with hinges installed, please consider using a soft down stay. See page 316~341 for more information on that line of hardware.

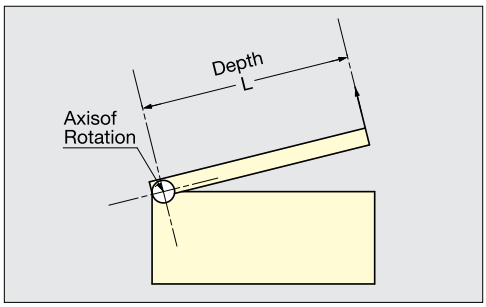

The torque rating of an application can be determined by using the following equation:

$$\text{panel weight (in pounds)} \times \text{panel depth (in inches)} \times \frac{1}{2} = \text{torque (in lbs·in)}$$
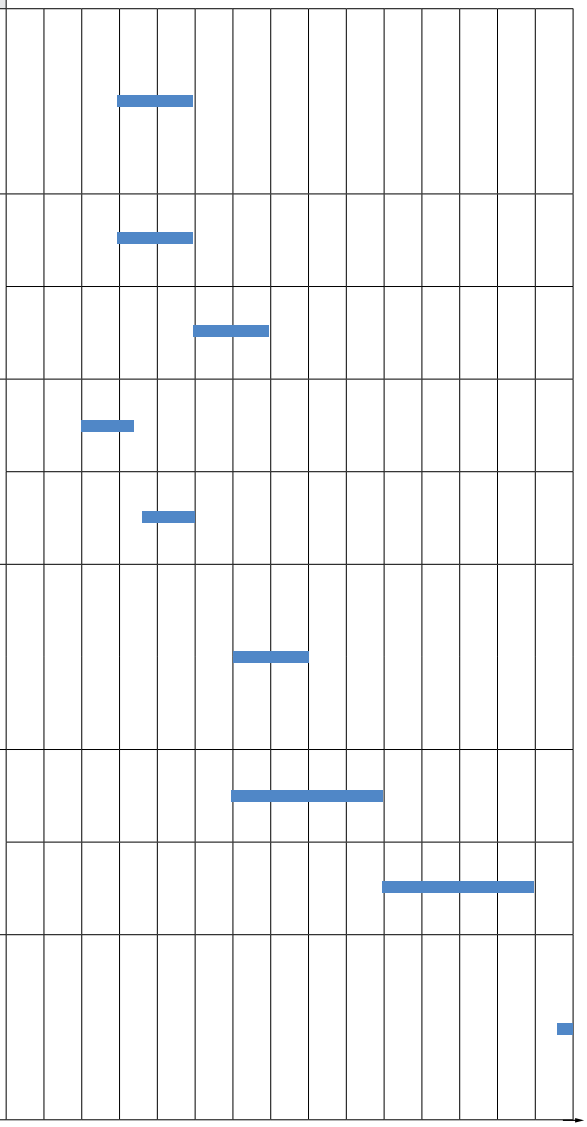
Picture	Item No.	Torque (kgf·cm)	Torque (lbs·in)	Page
	HG-JH14-50	30~51	26.0~44.0	261
	HG-JH25	31~51	27.0~44.0	261
	HG-JH35	51~71	44.0~61.0	
	HG-JHM16-34BL (WT)	20~34	17.4~29.5	262
	HG-JHM16-50BL (WT)	34~50	29.5~43.4	
	HG-JHM20-80BL (WT)	61~82	53.0~70.8	263
	HG-JHW50 (G)	61~102	53.0~88.0	264
	HG-JHW70 (G)	102~143	88.0~124.0	
	HG-JH210	210	182.0	265