Bathtub - **Supernova**

Cascade tub spout for wall-mounted installation - Champagne - Champagne

Article number: 13 430 730-47

Exploded drawing

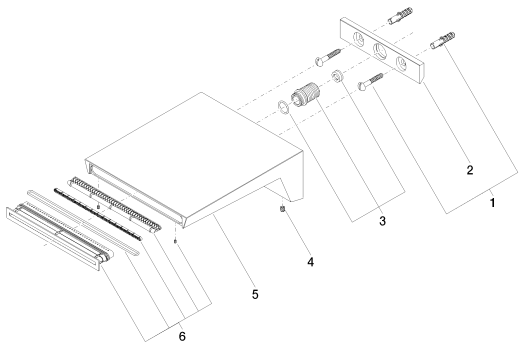

Spare parts list

Number	Item Number	Designation	Number of units
1	04 30 31 024 01 90	Mounting bracket -	1
2	09 17 97 056 90	Holder -	1
3	90 24 05 008 00 90	Nipple -	1
4	09 31 11 049 90	Mounting bracket -	2
5	09 11 73 002-47	Outlet - Champagne	1
6	90 29 03 059 00 90	Application -	1
9	09 14 10 199 90	Washer -	1