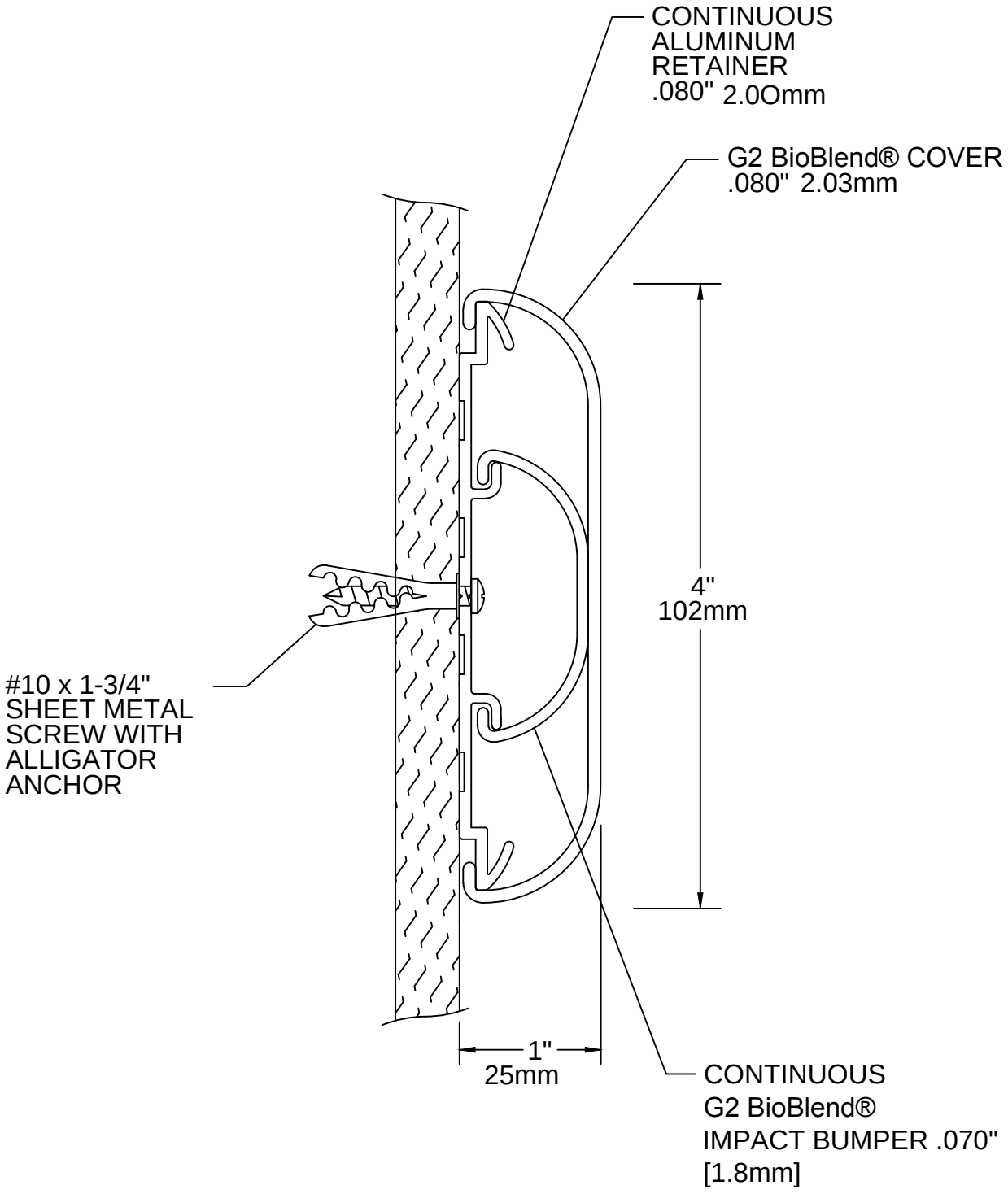


| | | | |
|---|---|---|---|
| IPC™ DOOR + WALL PROTECTION SYSTEMS | DATE: 03/17/11 | G2-1400 Wall Guard | inpro |
| | SCALE 1:1 | | |
| | DOC.CADIPC.084/rev1 | | |