Fail-Safe

DESCRIPTION

The Fail-Safe Harmony VR Linear provides exceptional aesthetics with remarkable strength. A wide variety of lamp options and connection configurations offer unmatched versatility for a wide range of applications. Die-Cast end caps, heavy extruded aluminum body provides strength and rigidity for complex environments while an extruded linear ribbed polycarbonate lens obscures the lamp image and spreads light evenly. The Harmony VR Linear is ideal for areas where the need for aesthetics and protection from vandalism are critical. Perfect for schools, hospitals, corridors, dormitories, public restrooms, common areas, and transit stations.

		Type
Catalog #		
Project		
Comments		Date
Prepared by		

SPECIFICATION FEATURES

Housing
Heavy duty extruded aluminum rails and die-cast end caps provide rigid construction. Smooth end caps provided with internal 7/8" knockouts. Finished in white standard. Optional architectural colors available.

Fasteners
Stainless steel TORX® with center reject pin and allen head set screws provided. Screw heads are side mounted and concealed under lens.

Lens
One-piece, extruded UV stabilized polycarbonate. Unique linear ribbed design provides even light distribution while obscuring lamp image and direct glare. Internal ribs reduce dirt build-up and make cleaning easier.

Reflector
20 ga. CRS with white high reflectance polyester powder coat finish. Reflector serves as ballast and wireway cover.

Lamps
By others.

Ballast
Ballasts are CBM/ETL Class "P" and positively secured to housing.

Socket
Pressure lock lampholders.

Labels
UL/cUL listed for wet locations under covered ceiling, surface mount. Damp location standard for all other mountings. IP64 optional.

HVL8

8" Continuous
Harmony
T5
T8
Fluorescent
Vandal Resistant
Linear

Polycarbonate
Clear Linear Ribbed or Smooth
Opal

HARMONY™
Vandal Resistant

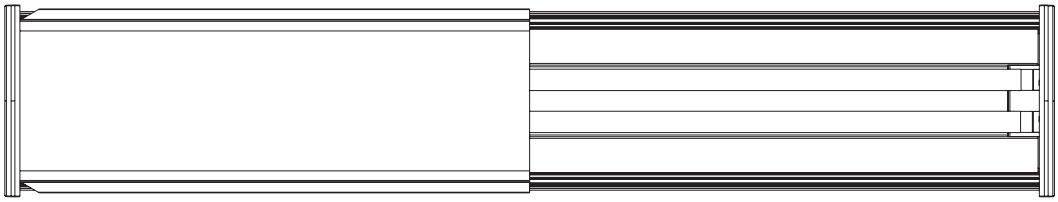

END DIMENSIONS

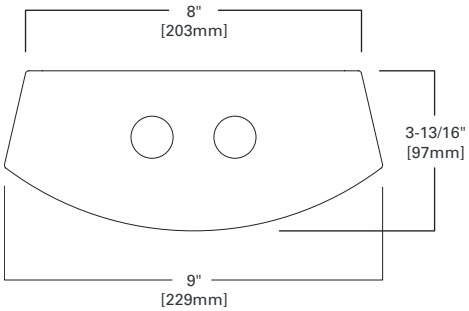

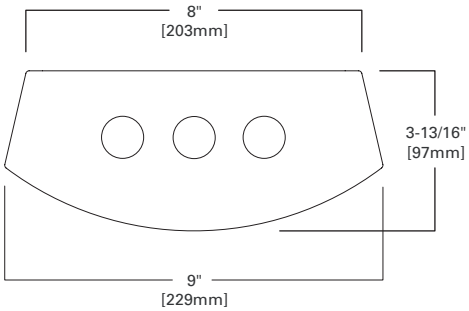

ENERGY DATA

For Energy Management related technical data to support the performance of this fixture series, refer to the ordering information for input wattage.

TORX® is a registered trademark of Camcar Division of Textron Inc.

EATON
Powering Business Worldwide

ADC050453
2017-02-28 16:47:33

ORDERING INFORMATION

SAMPLE NUMBER: HVL8BR-332-120V-O-EB82-D

Product Family	Row/Node Configuration	Lamp Type	Voltage	Lens Type	Ballast	End Caps	Options	Finish	Accessories (Order Separately)

HVL8=Harmony VR Linear 8" Width 2' & 4' Length

8THVL8=Harmony VR Linear 8" Width 8' Length

BR=Beginning of run
MR=Middle of run
ER=End of run

Lamp Type

2' Length
114=(1) 14W T5 Lamp
214=(2) 14W T5 Lamps
314=(3) 14W T5 Lamps
124=(1) 24W T5HO Lamp
224=(2) 24W T5HO Lamps
117=(1) 17W T8 Lamp
217=(2) 17W T8 Lamps
317=(3) 17W T8 Lamps

4' Length
128=(1) 28W T5 Lamp
228=(2) 28W T5 Lamps
328=(3) 28W T5 Lamps
154=(1) 54W T5HO Lamp
254=(2) 54W T5HO Lamps
132=(1) 32W T8 Lamp
232=(2) 32W T8 Lamps
332=(3) 32W T8 Lamps

8' Length
128 =(1) 28W T5 Lamp
228 =(2) 28W T5 Lamps
328 =(3) 28W T5 Lamps
154 =(1) 54W T5HO Lamp
254 =(2) 54W T5HO Lamps
132 =(1) 32W T8 Lamp
232 =(2) 32W T8 Lamps
332 =(3) 32W T8 Lamps

Voltage
120=120V
277=277V
347=347V
UNV=120-277V
UNC=347-480V

Lens Type
C=Clear Linear Ribbed (smooth on outside)
O Opal Smooth (no ribs)

Electronic Ballast
EB81 =(1) Ballast for use with T8 lamp
EB82 =(2) Ballasts for use with T8 lamp
EB83 =(3) Ballast for use with T8 lamp
EB84 =(4) Ballasts for use with T8 lamp
EB51 =(1) Ballast for use with T5 lamp
EB52 =(2) Ballasts for use with T5 lamp
EB53 =(3) Ballasts for use with T5 lamp
EB54 =(4) Ballasts for use with T5 lamp

Blank=No End Caps (Middle of run Units)
D=Decorative End Caps, Sculpted
S=Smooth End Caps, Flat

EL4=EM Pack, T8 [1, 4, 6]
EL5=EM Pack, T5, T5HO [1, 4, 6]
FNL=Fluorescent Night Light (5, 7, 9W) [1, 5]
PM=Pendant Mount [2, 11]
GLR=Fuse and Holder
TILW=Tandem Inline Wiring (8T only)
UPL=Uplight [12]
NSF=Certified NSF Rating for Food Industry
PI1BLK-6PP-WG =Single circuit harness, hot conductor black and white neutral connected to driver(s), with ground [7, 8]
PI2BLK-6PP-WG =Dual circuit harness, hot black conductor and white neutral connected to driver(s), with ground [7, 8]
PI2BLU-6PP-WG =Dual circuit harness, hot blue conductor and white neutral connected to driver(s), with ground [7, 8]
IB/OB=Inboard/outboard wiring (only necessary for 8T- 2', 4' fixtures default to IB/OB)
OS=Integral motion/occupancy sensor (within lens) [9, 10]
IP64=IP64 Compliant [11]

Blank =Architectural White
BK=Architectural Black
DP=Dark Platinum

VRSD=T20 Center Pin Tamperproof TORX®-head bit

Notes:

1 Must specify voltage.
2 Stems must be ordered separately.
4 Standard EBP is low-profile (1.18" height). For larger profile EBP, wireway cover size is increased to fit over the EBP which causes a noticeable shadow/dark spot when fixture is illuminated. Lamps are off-center to accommodate the larger size EBP. Consult factory for details.
5 FNL not available with 3-lamp cross-section.
6 Not available in 3-lamp cross-section.
7 Consult factory for additional configurations.
8 Black conductor connected to outboard lamp - default at factory with inboard/outboard wiring.
9 Connected to all ballasts on fixture. Consult factory for other OS/lamp configurations.
10 2-lamp cross-section maximum.
11 IP64 not available with PM option.
12 Only available with PM option.

ORDERING INFORMATION EXAMPLE: (3) 8' FIXTURES, 24' RUN

(1) 8THVL8BR-232-UNV-C-EB82-S
(1) 8THVL8MR-232-UNV-C-EB82-S
(1) 8THVL8ER-232-UNV-C-EB82-S

SIDE DIMENSIONS

Consult factory for 8' dimensions.

SMOOTH END CAPS

2' BEGINNING AND END UNITS

T5=23-9/16" [598mm] **T8**=25-3/16" [639mm]

4' & 8' BEGINNING AND END UNITS

T5=47-3/16" [1198mm] **T8**=49-3/16" [1249mm]

DECORATIVE END CAPS

2' BEGINNING AND END UNITS

T5=24-7/16" [620mm] **T8**=26-1/32" [661mm]

4' & 8' BEGINNING AND END UNITS

T5=48-1/16" [1220mm] **T8**=50-1/32" [1271mm]

JOINER BANDS

2' MIDDLE UNITS

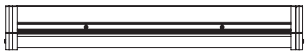

T5 (2)=23-9/16" [598mm] **T8 (2)**=25-3/16" [639mm]

4' & 8' MIDDLE UNITS

T5=47-3/16" [1199mm] **T8 (2)**=49-3/16" [1249mm]

CONNECTORS AND ACCESSORIES

8" CORNER MOUNT BRACKET [1]

HVL8-2T5CM = 8", 2Ft. T5 Corner Mount
HVL8-2T8CM = 8", 2Ft. T8 Corner Mount
HVL8-2LEDCM = 8", 2Ft. LED Corner Mount

HVL8-4T5CM = 8", 4Ft. T5 Corner Mount
HVL8-4T8CM = 8", 4Ft. T8 Corner Mount
HVL8-4LEDCM = 8", 4Ft. LED Corner Mount

Note: [1] Requires 90-degree offset 1/4" driver and VRSB bit for installation.

12" CORNER MOUNT BRACKET [1]

HVL12-2T5CM = 12", 2Ft. T5 Corner Mount
HVL12-2T8CM = 12", 2Ft. T8 Corner Mount
HVL12-2LEDCM = 12", 2Ft. LED Corner Mount

HVL12-4T5CM = 12", 4Ft. T5 Corner Mount
HVL12-4T8CM = 12", 4Ft. T8 Corner Mount
HVL12-4LEDCM = 12", 4Ft. LED Corner Mount

Note: [1] Requires 90-degree offset 1/4" driver and VRSB bit for installation.

PENDANT MOUNT: Suspension Sets - Stem Sets

XX = Length (6, 8, 12, 24, 36, 48, 60, 72)

SCF-XX-B = Fixed Stem Set

Used with all surface fixtures as stem sets. One set consists of one stem assembly. Minimum of two sets required per fixture. Not rated WL under covered ceiling.

NOTE: Coupler, 3/8" IPS Pipe Coupler to join lengths. Coupler is standard baked white enamel or special order of black. Must specify pendant mount (PM) option on luminaire.

Lifetime Warranty

Fail-Safe will repair or provide a replacement fixture for any VR architectural luminaire found to be inoperatiave due to physical abuse for the duration of the installation. ** This includes all VR polycarbonate lens luminaires. This warranty is only valid to proper installation of the luminaire, using the four-point mounting method for all luminaires. Furthermore, Fail-Safe cannot warranty product against some forms of anti-social human behavior involving corrosive chemicals, fire, paint or gunfire.

** To make a claim, contact your Cooper Lighting Agent to arrange an RMA (Return Material Authorization) for the claimed product. Upon receipt and verification of the defect, Cooper Lighting will return to you a repaired or, at Cooper Lighting's sole option, replacement fixture.