Sguig®

KEILHAUER

1450 Birchmount Road, Toronto, Ontario, Canada M1P 2E3
tel 416 759 5665 fax 416 759 5723 1 800 724 5665
www.keilhauer.com info@keilhauer.com

Sit down. Please. The only way to know if you are adjusting your chair to provide you with maximum comfort, is to make these adjustments while you are seated.

1. Seat Height Adjustment

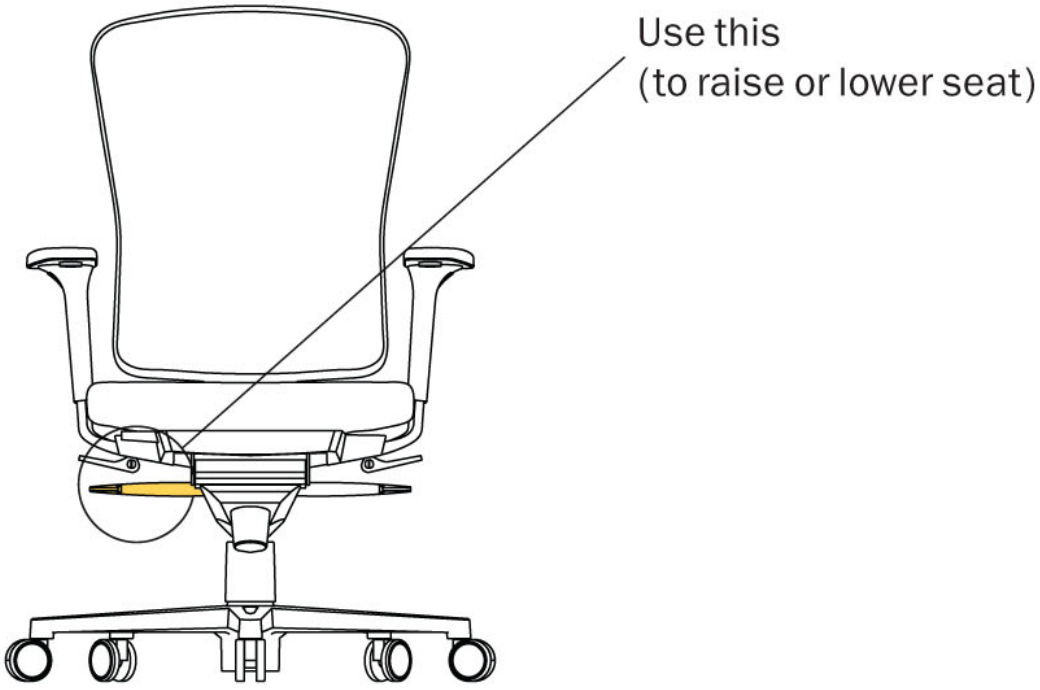

Use the paddle shaped lever on the right side underneath the seat

To raise lift your weight off the seat while lifting the front of the lever

To lower sit on the seat while lifting the front of the lever

2. Tension Adjustment

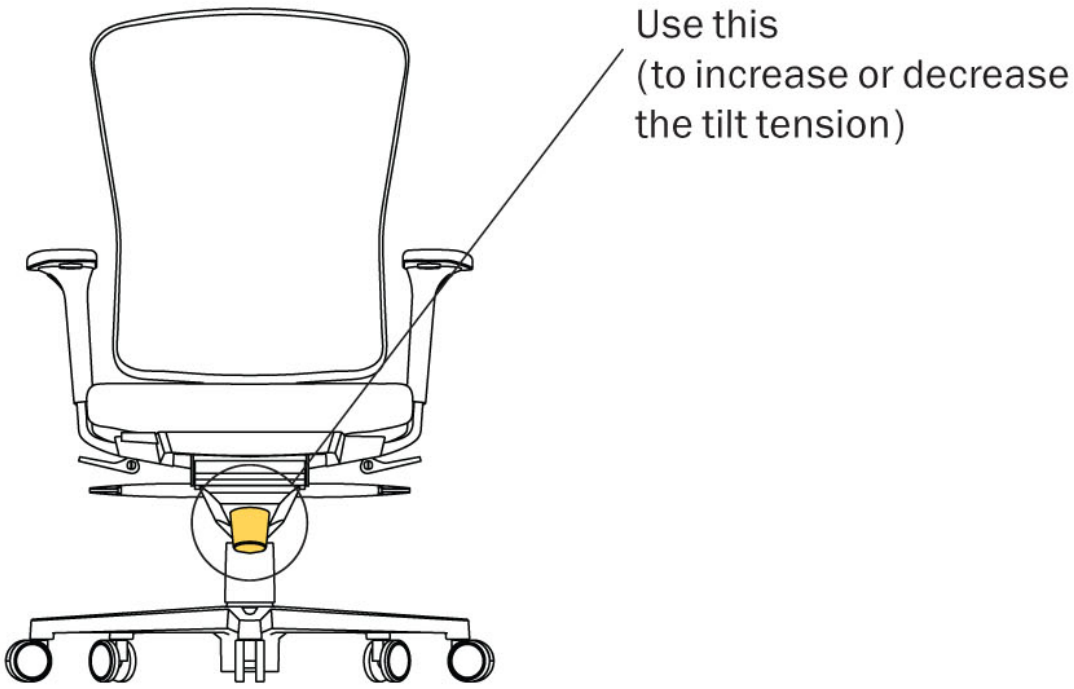

Use the big round knob underneath the centre of the seat

To increase tension turn the knob clockwise

To decrease tension turn the knob counter-clockwise

3. Tilt Lock

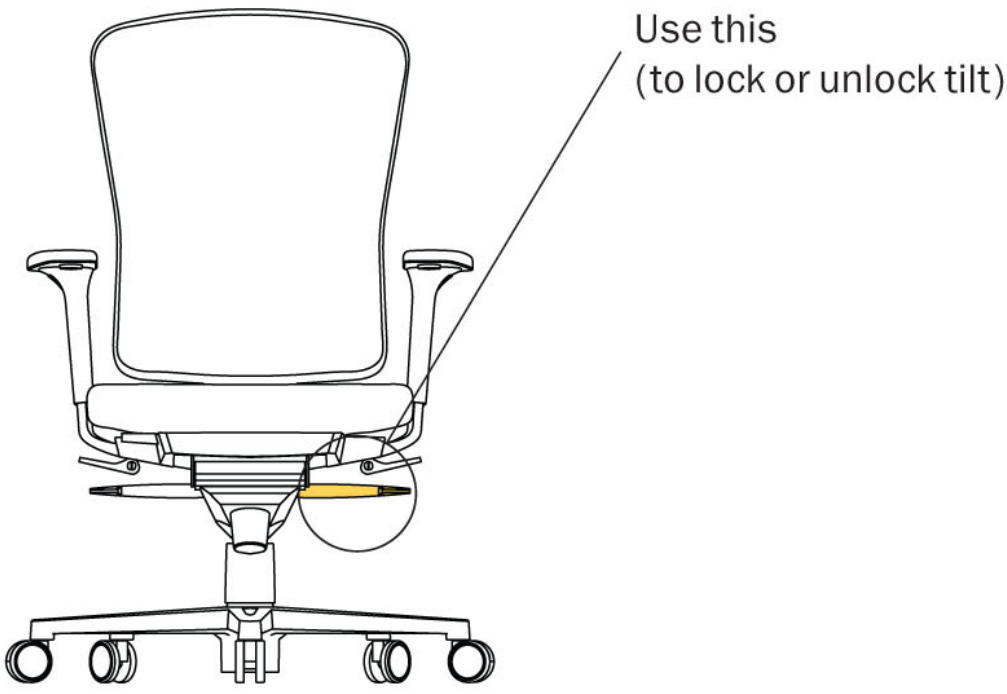

Use the paddle shaped lever on the left side underneath the seat

To unlock tilt pull the front of the lever up and tilt back slightly

To lock tilt recline to your desired position and push the front of the lever down

4. Arm Height Adjustment/Sliding Seat Pan

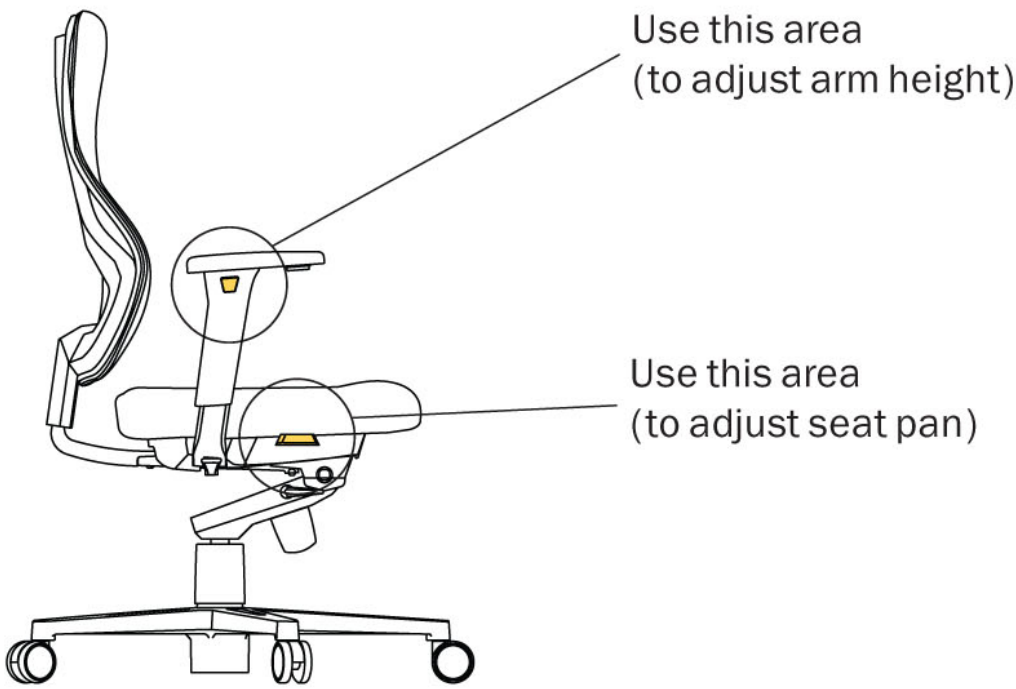

Use the buttons on the outside of the arm rests

To raise or lower push the button in and raise or lower the arm rest and release button to lock

Use the lever located underneath the seat on the right hand side of the chair, above the seat height adjustment paddle

Pull the lever out to activate the sliding seat pan and slide your seat forwards, release the lever to lock the seat into the desired depth. Pull the lever again and slide backwards to return to the start position

5. Arm Adjustments

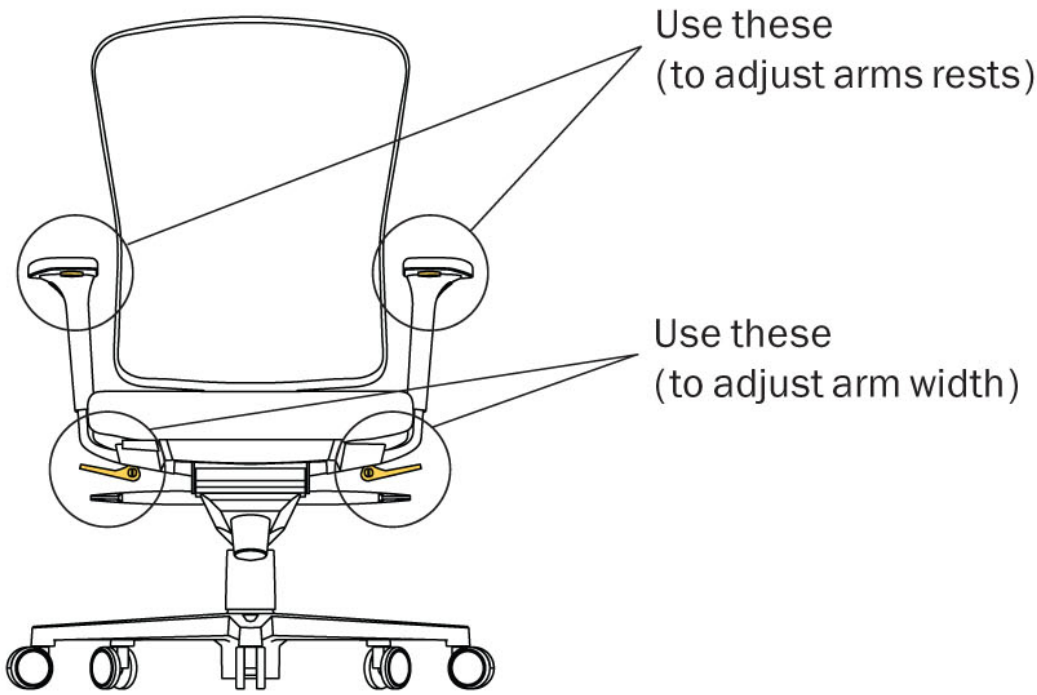

Arm Rest Pivot - Grasp the front of the arm rest firmly to pivot in or out

Arm Rest Rotation - Press the buttons located under the front of the arm rests to rotate up to 180˚

Arm Width - Push lever down to release arm. Grasp arm and pull in or out to desired width. Pull lever up to lock in position

6. Back Height Adjustment

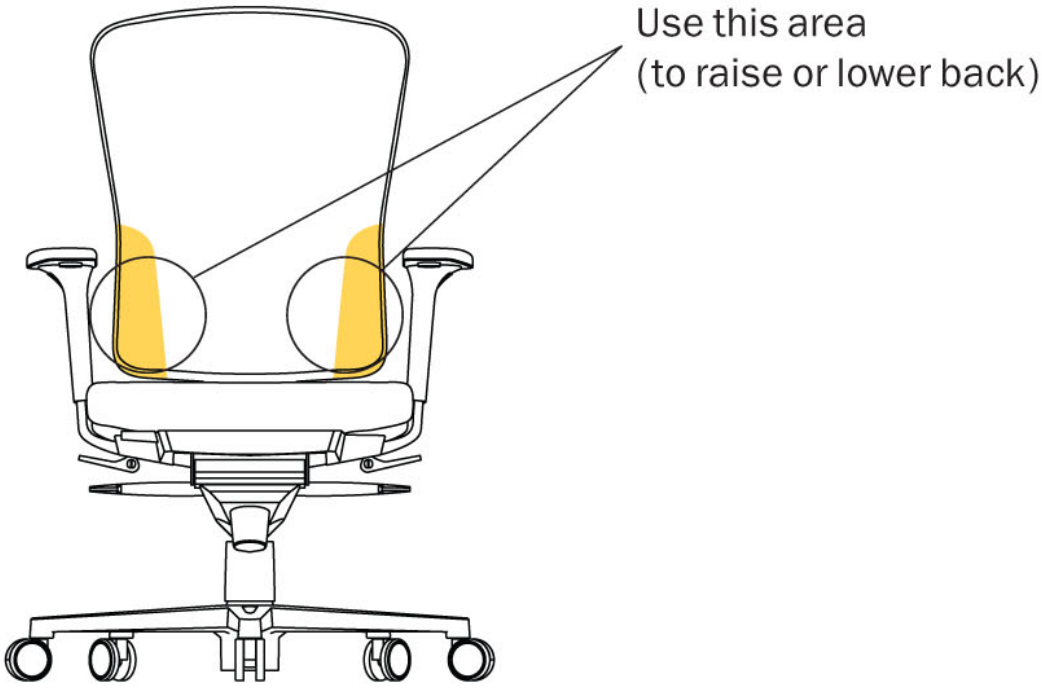

Use the sides of the back just above the seat and grab with both hands

To raise lift the back up – you will hear a click for each height increment

To lower lift the back to the highest setting and it will disengage allowing it to drop down to the starting (lowest) height:
the back must return to the starting position to reengage the height adjustment mechanism

Pelvic Balance Point®
T1-L5 Free Shoulders®

© COPYRIGHT KEILHAUER 2007