SLOAN®

Royal® Model

OPTIMA®

Sensor Activated Flushometers

Buy American Act Compliant

140-1.28 WB ES-S

HIGH-EFFICIENCY TOILET

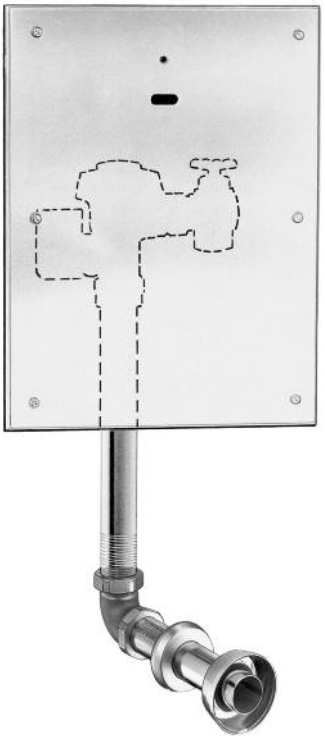

Made with Renewable Energy

Description
Concealed, Sensor Activated Royal® Model Water Closet Flushometer, enclosed behind a 13" x 17" Wall Box with Stainless Steel Access Panel, for floor mounted back spud bowls with exposed back spud.

Flush Cycle
☐ Model 140-1.28 WB ES-S High Efficiency (1.28 gpf/4.8 Lpf)

Specifications
Quiet, Concealed, Diaphragm Type, Rough Brass Closet Flushometer with the following features:

- PERMEX™ Synthetic Rubber Diaphragm with Linear Filtered Bypass and Vortex Cleansing Action™
- OPTIMA® EL-1500-L Self-Adaptive Infrared Sensor with Indicator Light
- User friendly three (3) second Flush Delay
- Courtesy Flush™ Override Button
- Non-Hold-Open Integral Solenoid Operator
- 13" x 17" EASY ACCESS® Wall Box with Stainless Steel Access Panel and Vandal Resistant Screws
- 1" I.P.S. Wheel Handle Bak-Chek™ Angle Stop
- Adjustable Tailpiece
- High Back Vacuum Breaker Flush Connection, Spud Coupling and Flanges for 1½" Exposed Back Spud
- Chrome Plated Exposed Flushometer Parts
- High Copper, Low Zinc Brass Castings for Dezincification Resistance
- Non-Hold-Open Integral Solenoid Operator, Fixed Metering Bypass and No External Volume Adjustment to Ensure Water Conservation
- Flush Accuracy Controlled by CID Technology
- Diaphragm, Stop Seat and Vacuum Breaker to be molded from PERMEX™ Rubber Compound for Chloramine Resistance
- 100% of the energy used in manufacturing is offset with Renewable Energy Sources– Wind Energy

Valve Body, Cover, Tailpiece and Control Stop shall be in conformance with ASTM Alloy Classification for Semi-Red Brass. Valve shall be in compliance with the applicable sections of ASSE 1037, ANSI/ASME A112.19.2. Installation conforms to ADA requirements.

L Dimension
Specify the "L" Dimension for the proper length of the Flush Connection. The "L" Dimension is equal to the Wall Thickness (to nearest whole inch) plus 2¾".

Variations
☐ **TP** Trap Primer Elbow

Accessories
☐ **EL-154** Transformer (120 VAC/24 VAC, 50 VA)
☐ **EL-342** Transformer (240 VAC/24 VAC, 50 VA)

See Accessories Section and OPTIMA Accessories Section of the Sloan catalog for details on these and other OPTIMA Flushometer variations.

This space for Architect/Engineer approval

Job Name _____ Date _____

Model Specified _____ Quantity _____

Variations Specified _____

Customer/Wholesaler _____

Contractor _____

Architect _____

Automatic
Sloan OPTIMA® equipped Flushometers provide the ultimate in sanitary protection and automatic operation. There are no handles to trip or buttons to push. The Flushometer operates by means of an infrared sensor that adapts to its surrounding. Once the user enters the sensor's effective range and then steps away, the Flushometer Solenoid initiates the flushing cycle to flush the fixture. Wall Box allows for vandal-proof concealed installation where pipe chase is not available or pipe space is limited.

Hygienic
User makes no physical contact with the Flushometer surface except to initiate the Override Button when required. Helps control the spread of infectious diseases. Twenty-four Hour Sentinel Flush keeps fixture fresh during periods of nonuse.

Economical
Automatic operation provides water usage savings over other flushing devices. Reduces maintenance and operation costs.

Practical
Solid state electronic circuitry assures years of dependable, trouble-free operation. The operational components of the Flushometer are identical to a handle activated Royal® Flushometer, proven by 90 years of experience.

Warranty
3 year (limited)

The information contained in this document is subject to change without notice.

140-1.28 WB ES-S

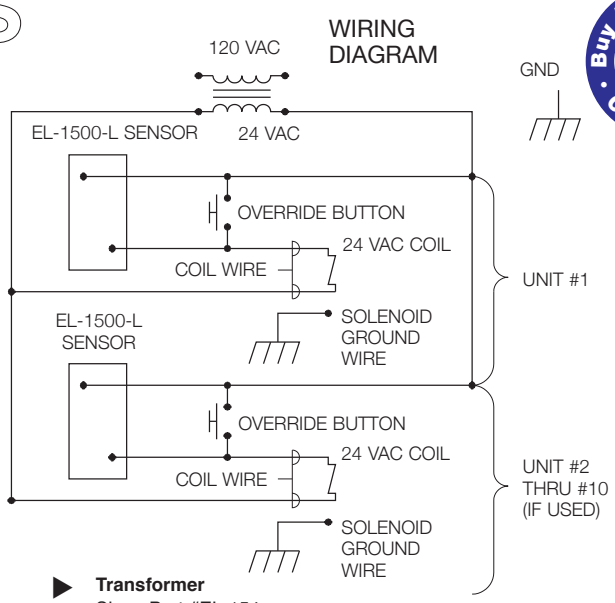

▶ **Description**
Concealed, Sensor Activated Royal® Model Water Closet Flushometer, enclosed behind a 13" x 17" Wall Box with Stainless Steel Access Panel, for floor mounted back spud bowls with exposed back spud.

▶ **Flush Cycle**
☐ Model 140-1.28 WB ES-S High Efficiency (1.28 gpf/4.8 Lpf)

ELECTRICAL SPECIFICATIONS

▶ **Control Circuit**
Solid State
24 VAC Input
24 VAC Output
8 Second Arming Delay
3 Second Flush Delay
24 Hour Sentinel Flush

▶ **OPTIMA Sensor Range**
Nominal 22" - 42" (559 mm - 1067 mm)
Self-adaptive Window ± 10" (254 mm)

▶ **Solenoid Operator**
24 VAC, 50/60 Hz

▶ **Wall Box Specifications**
EASY ACCESS® Wall Box Assembly — Part #EL-192-A
Frame: 13" x 17" x 4" (330 mm x 432 mm x 102 mm) #16 Gauge Steel
Cover (Access Panel): 14½" x 18½" (368 mm x 470 mm) #15 Gauge #304 Stainless Steel, #4 Finish
Screws: (6) #8-32 x ¾" Drilled Spanner Head — Spanner Bit Provided

▶ **Transformer**
Sloan Part #EL-154
120 VAC, 50/60 Hz Primary
24 VAC, 50/60 Hz Secondary
Class II, UL Listed, 50 VA.

Sloan Part #EL-342
240 VAC, 50/60 Hz Primary
24 VAC, 50/60 Hz Secondary
Class II, UL Listed, 50 VA.

One Transformer serves up to ten (10) OPTIMA Closet/Urinal Flushometers. Specify number of transformers required accordingly.

OPERATION

1. A continuous, invisible light beam is emitted from the OPTIMA Sensor.

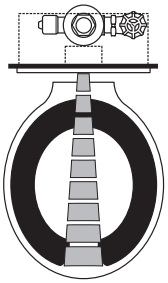

2. As the user enters the beam's effective range (22" to 42") the beam is reflected into the OPTIMA Scanner Window and transformed into a low voltage electrical circuit. Once activated, the Output Circuit continues in a "hold" mode for as long as the user remains within the effective range of the Sensor.

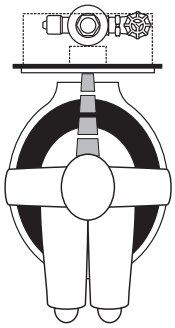

3. When the user steps away from the OPTIMA Sensor, the circuit waits 3 seconds (to prevent false flushing) then initiates an electrical "one-time" signal that operates the Solenoid. This initiates the flushing cycle to flush the fixture. The Circuit then automatically resets and is ready for the next user.

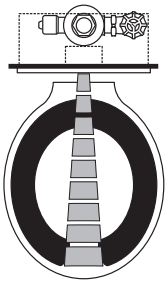

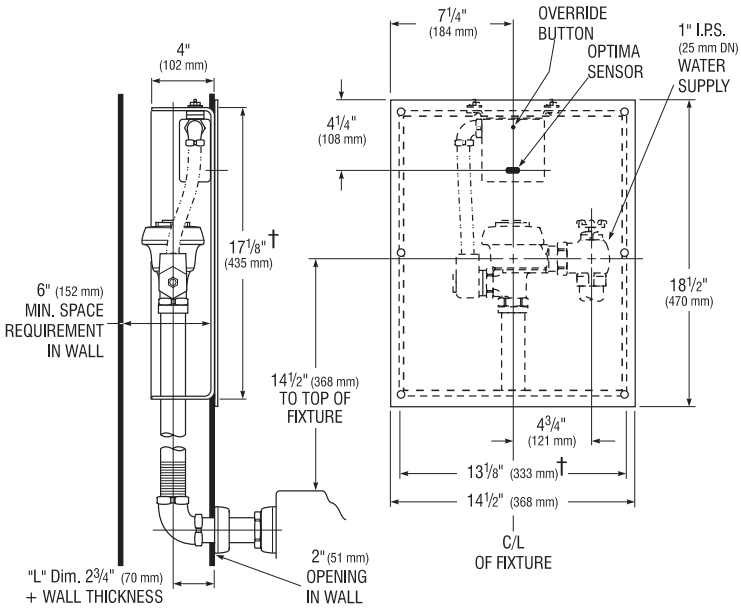

† Required Wall Opening

ELECTRICAL BOX INSTALLATION

SENSOR LOCATION AND POSITIONING IS CRITICAL

Failure to properly position the electrical boxes to the plumbing rough-in will result in improper installation and impair product performance. All tradesmen (plumbers, electricians, tile setters, etc.) involved with the installation of this product must coordinate their work to assure proper product installation.

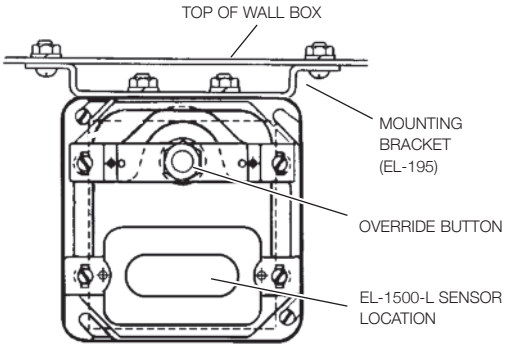

Adjust the Mounting Bracket so that the Sensor sits flush against the Cover Plate.

Refer to the instructions packaged with the Flushometer for additional installation information.

SLOAN VALVE COMPANY • 10500 SEYMOUR AVENUE • FRANKLIN PARK, IL 60131

Phone: 1-800-9-VALVE-9 or 1-847-671-4300 • Fax: 1-800-447-8329 or 1-847-671-4380 • http://www.sloanvalve.com

Copyright © 2010 Sloan Valve Company