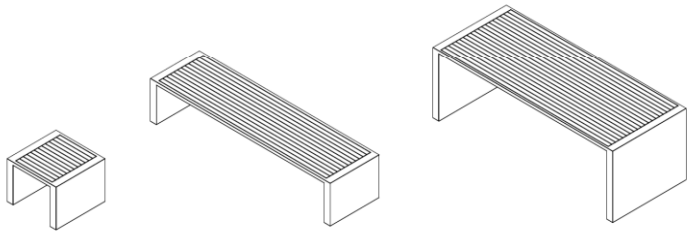

24” bench 87” bench 87” table

Included components: Units can be freestanding or anchored with included hardware.
- (4) M12 x 140mm bolts for anchoring.

Tools required:
- Crane or proper equipment to move 291 lbs (24” bench), 562 lbs (87” bench) or 1184 lbs (87” table)
- Wood supports or straps

For embedding:
- Wrench, 19mm
- Chemical anchoring adhesive
- Hammer drill with Ø1-1/2” [40mm] masonry drill bit

INSTALLATION:

Determine placement of unit.

For freestanding installation:
1. Set in place with proper equipment such as a crane. See Fig. 1.

For embedding:
1. Lift unit. Measure hole locations.
2. Mark hole locations.
3. Drill holes according to Fig. 2.
4. Lift unit and install M12 x 140mm bolts. Thread in until tight.
5. Fill holes with chemical anchoring adhesive
6. Lower unit over holes.

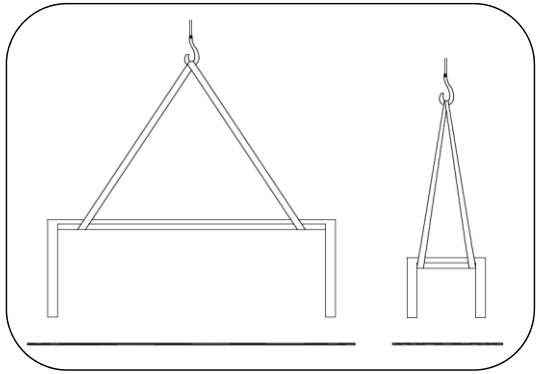

Fig. 1 – Crane install

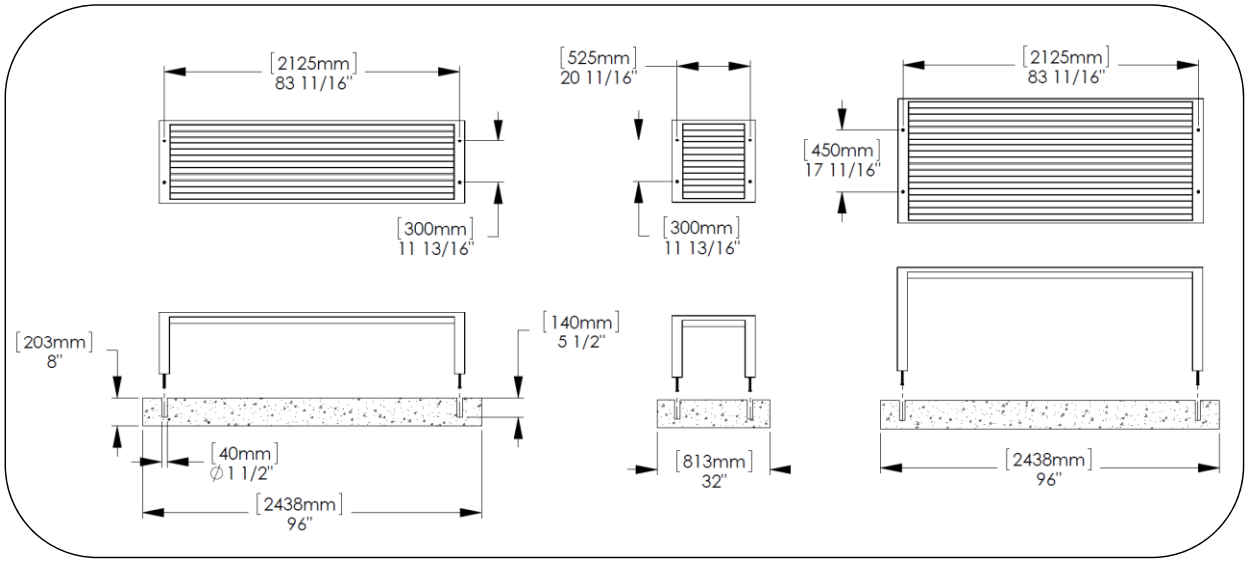

Fig. 2 – concrete footing details

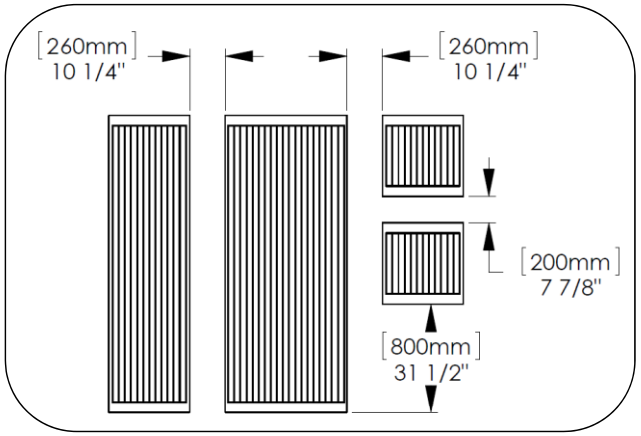

Fig. 3 – bench, table spacing