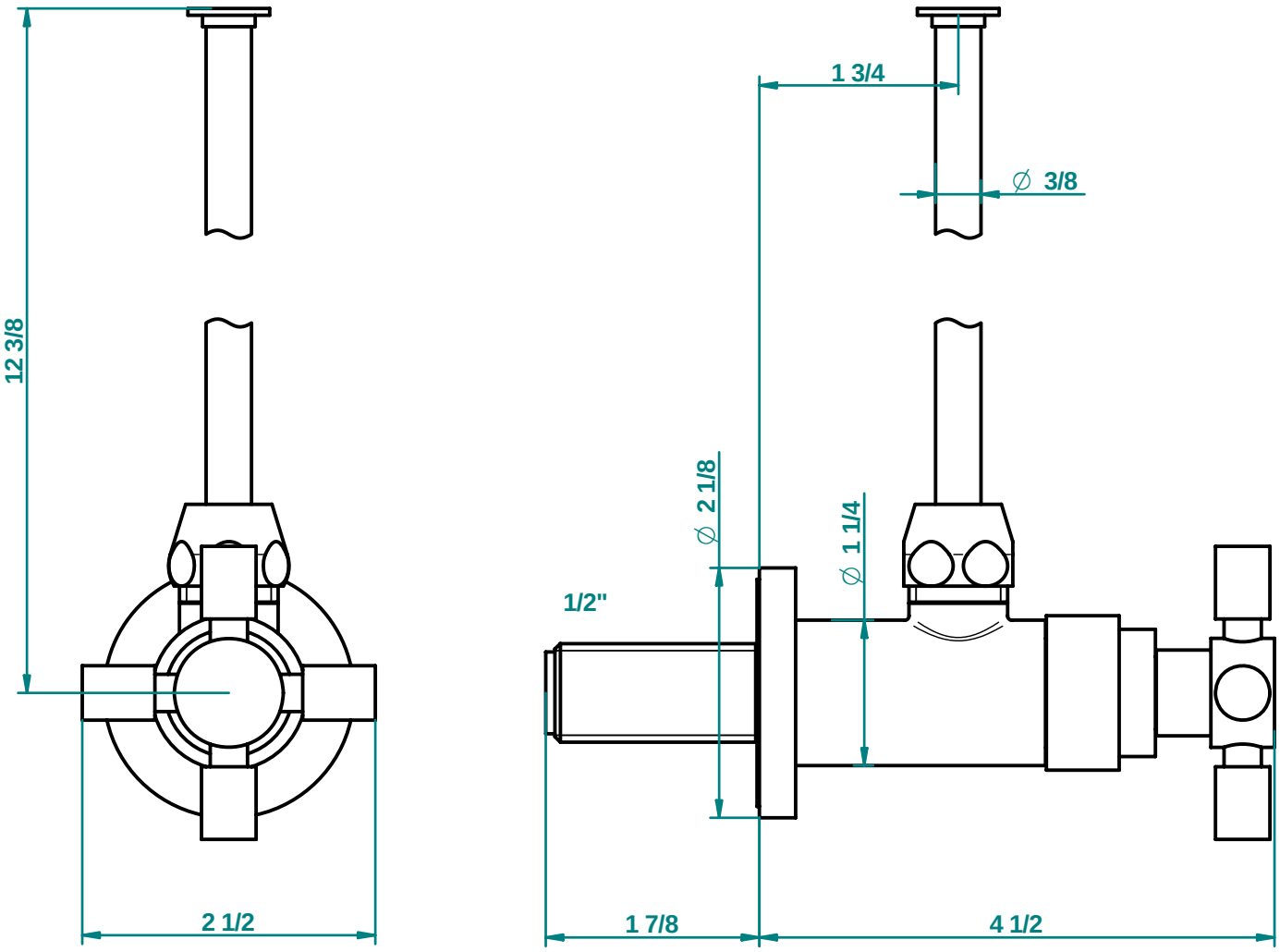
12 3/8
2 1/2
1 3/4
∅ 3/8
∅ 2 1/8
∅ 1 1/4
1/2"
1 7/8
4 1/2