Job Name:

Type:

New Age Series

NAS-ERA-24-SP

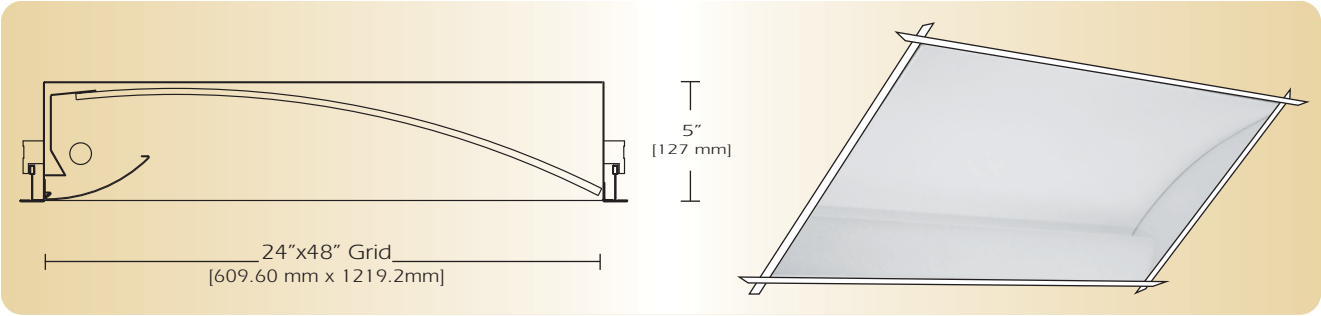

TYPE _____

FEATURES

The NAS-ERA is one variation of a complete group of Recessed Direct luminaires featuring a metal perforated lamp shield with an acrylic overlay to obscure direct lamp image. The perforated lamp shield is asymmetrically positioned above the ceiling plane. Lamp output is distributed over a computer designed reflector system to provide soft glare-free illumination. The NAS-ERA series can be used in any installation where high performance and comfortable lighting are required.

SPECIFICATIONS

Housing: Die formed 20-gauge cold rolled steel finished in baked white enamel. Housing has an access plate on top with two 7/8" diameter knockouts.

Shielding: Die formed 20 gauge perforated steel lamp shield has a 41% opening with white acrylic .020 translucent overlay.

Reflector: Die formed .020 semi-specular aluminum highly reflective with low glare. The hinged lamp shield is removable for easy lamp access.

Electrical: Ballast is electronic, high power factor, thermally protected class P, sound rated A, with less than 20% total harmonic distortion. The minimum number of ballasts will be used unless otherwise specified.

Mounting: Standard installation is 2 x 4 exposed inverted T-bar ceiling. Optional trims are also available for installations in miniature grid, drywall or plaster ceiling. For mounting detail information consult factory. Four support brackets are included with each fixture.

Finish: Fixture housing and steel components are finished in baked white enamel applied over a five-stage pretreatment process.

Lamps: Fixtures are provided for use with two 40 or 50 watt compact fluorescent or one 32 watt T8 lamps. (Supplied by Others)

Certification: Luminaires are U. L. Listed, C.S.A. certified and are Union Made in the United States of America I.B.E.W.

ORDERING GUIDE

MODEL NO.	LAMPS	SIZE	MOUNTING	FINISH	VOLTAGE	OPTIONS
NAS-ERA-SP -	-	**24** —	—	—	—	
NAS-ERA-SP	**240-CF** **250-CF** **132-T8** **O**=Other Specify	**24**= 2X4	**G**= Standard Lay-in Grid **MG**= Miniature Grid **F**= Flanged	**W**= White **CC**= Custom Color	**120v** **277v**	**See Options Below**

Example: **NAS-ERA-SP-132T8-24-G-W-277**

New Age Series with perforated lamp shield and semi-specular reflector one 32 watt T8 fluorescent 2 x 4 grid fixture finished in baked white enamel 277 volt electronic ballast less than 20% harmonics

OPTIONS

E10= Electronic ballast, high power factor, thermally protected class P, sound rated A, <10% total harmonic distortion

DIM= Dimming Ballast

EPC= Emergency Battery Pack

EMC= Emergency Circuit

ARS= Air return system

FWH= Flexible wiring harness

OTH= See Accessory Section for other options available

126 Chestnut Street, Warwick RI 02888
t. (401) 467-8232 / f. (401) 941-2960 / e. sales@dayolite.com
www.dayolite.com

DAY-O-LITE
FLUORESCENT FIXTURES
DIVISION OF SCW CORPORATION

New Age Series

NAS-ERA-24-SP

LINEAR SECTIONS AND SUSPENSION LOCATION

MOUNTING "G"

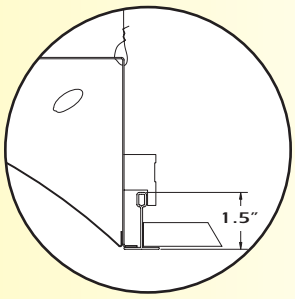

STD. 1 1/2" INVERTED "T" BAR

MOUNTING "MG"

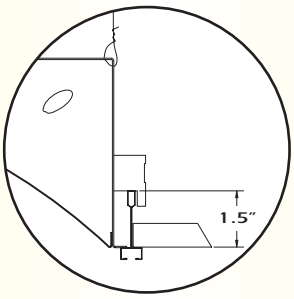

1 1/2" MINIATURE GRID CEILING

MOUNTING "F"

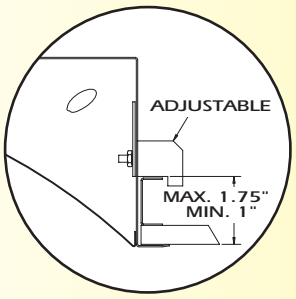

PLASTER OR DRY WALL CEILING

INSTALLATION PREPARATION

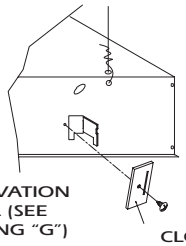

SIDE ELEVATION DETAIL (SEE MOUNTING "G")

CLOSURE PLATE

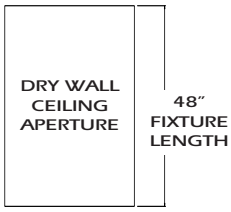

HOUSING WIDTH

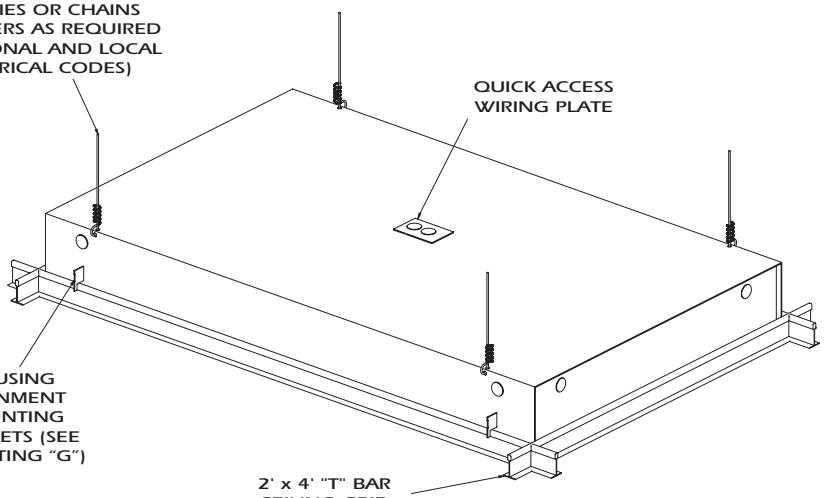

PHOTOMETRY

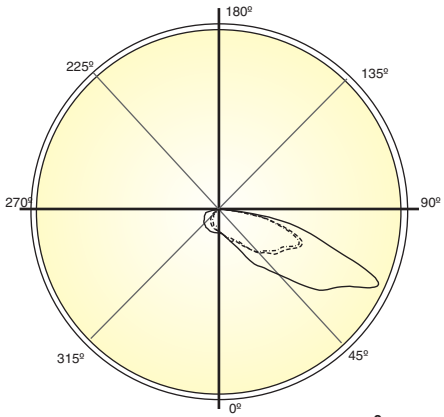

0
45
90

LAMP (1) 32W T8
LUMENS: 2900 PER LAMP

Candela Distribution:

Vert. Angle	0	22.5	45	67.5	90
0	187	187	187	187	187
5	223	200	209	211	224
10	202	239	233	280	263
15	187	214	264	307	327
20	178	207	297	346	365
25	160	233	341	377	391
30	175	246	345	439	526
35	169	257	385	576	640
40	160	264	466	690	768
45	149	277	535	810	945
50	142	278	587	976	1176
55	127	282	627	1137	1318
60	118	279	691	1231	1428
65	110	295	807	1408	1567
70	116	305	893	1185	1194
75	92	317	710	812	854
80	99.8	308	456	532	592
85	75.3	127	130	122	103
90	12.0	8.24	8.96	6.32	8.59

Optical Distribution:
100% Direct

Coefficients of Utilization - Zonal Cavity Method:

pfc = 0.20

pcc	.8				.7				.5			.3			.1			0
pw	.7	.5	.3	.1	.7	.5	.3	.1	.5	.3	.1	.5	.3	.1	.5	.3	.1	0
RCR																		
0	74	74	74	74	73	73	73	73	69	69	69	66	66	66	64	64	64	62
1	65	61	57	54	63	59	56	53	56	54	51	54	52	49	52	50	48	46
2	57	50	44	39	55	49	43	39	46	42	38	44	40	37	42	39	36	34
3	50	42	35	29	48	40	34	29	38	33	29	36	32	28	35	31	27	26
4	45	35	28	23	43	34	28	23	33	27	22	31	26	22	29	25	22	20
5	40	30	23	18	39	30	23	18	28	22	18	27	22	18	26	21	17	16
6	37	27	20	15	35	26	20	15	25	19	15	24	18	15	22	18	14	13
7	34	24	17	13	32	23	17	12	22	16	12	21	16	12	20	16	12	11
8	31	21	15	11	30	21	15	11	20	14	10	19	14	10	18	14	10	9
9	29	19	13	9	28	19	13	9	18	13	9	17	12	9	16	12	9	8
10	27	17	12	8	26	17	12	8	16	11	8	16	11	8	15	11	8	7

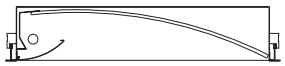

Total Luminaire Optical Efficiency = 63.1%

SCW-2

126 Chestnut Street, Warwick RI 02888
t. (401) 467-8232 / f. (401) 941-2960 / e. sales@dayolite.com
www.dayolite.com

DAY-O-LITE
FLUORESCENT FIXTURES
DIVISION OF SCW CORPORATION