PORTFOLIO™

DESCRIPTION

Round wall mount lens downlight with 6 inch aperture for vertical ED17 medium base quartz or ceramic metal halide lamp. Medium beam distribution with 45° cutoff to lamp produces even illumination with good efficiency. Available in white, black or bronze finish and can be used to blend with or accent varying architectural styles.

Catalog #		Type
Project		
Comments		Date
Prepared by		

SPECIFICATION FEATURES

Housing
Fabricated 0.062 thick aluminum housing and integral 0.125 thick extruded aluminum arm is available in various painted finishes.

Mounting Plate
Die formed 0.060 thick pre-galvanized steel mounting plate attached directly to wall mounted junction box. Housing attached to mounting plate and drawn tight to mounting surface with two Philips drive screws.

Reflector
Spun 0.050" thick aluminum reflector provides medium beam distribution. Available in all Portfolio Alzak® finishes. Also available with seamless grooved black baffle.

Shielding
Tempered glass lens provides lamp containment.

Trim Retention
Keyholes align reflector to preinstalled machine screws that pull flange tight to the housing.

Socket
Pulse rated E26 medium base porcelain socket with nickel plated brass screw shell.

Ballast
Magnetic core and coil 120/277V or 347V ballast. Quick connector plugs into housing for tool-less ballast installation / replacement.

Code Compliance
UL listed, CSA certified for standard wet locations. Exempt from EISA ballast efficiency standards.

M8605727
M8605737
M8605747

44600

50/70/100W
ED17
Metal Halide

6 Inch
Round Wall Mount Cylinder

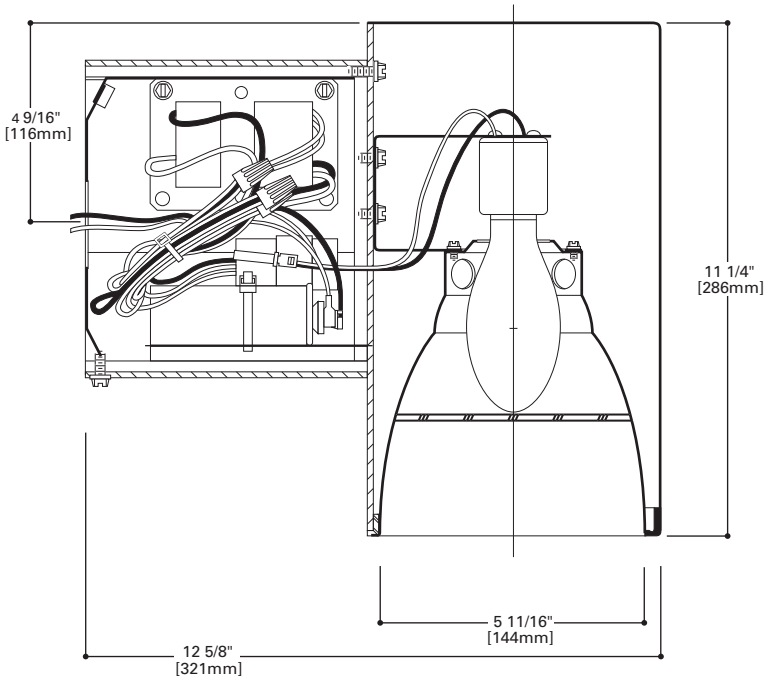

Energy Data		
50W		
120V Input Power: 72	277V Input Power: 72	347V Input Power: 67
120V Input Current: 1.0	277V Input Current: .5	347V Input Current: .48
70W		
120V Input Power: 90	277V Input Power: 90	347V Input Power: 90
120V Input Current: 1.9	277V Input Current: .8	347V Input Current: .7
100W		
120V Input Power: 129	277V Input Power: 129	347V Input Power: 129
120V Input Current: 2.3	277V Input Current: 1	347V Input Current: 1
Minimum Starting Temp: -20°F, -30°C		

ORDERING INFORMATION

Sample Number: M8605737P = 6" wall mount round cylinder, white with 120/277V ballast for a 70W ED17 MH lamp (Order housing and trim separately.)

Housing
M8605 = 6" Round MH Wall Mount Cylinder

Ballast
727 = 50W M148/M110 120/277V 60Hz magnetic
7267 = 50W M148/M110 347V 50/60Hz magnetic
737 = 70W M143/M98 120/277V 60Hz magnetic
7376 = 70W M143/M98 347V 50/60Hz magnetic
747 = 100W M140/M90 120/277V 60Hz magnetic
7476 = 100W M140/M90 347V 50/60Hz magnetic

Housing Finish
P = White
BZ = Bronze
MB = Black

Options
F = Time delay fuse

Trim
44600 = 6" Medium beam reflector

Finish (Alzak ® Finishes)
LI = Specular Clear, low iridescent
H = Semi-specular clear
WMH = Warm Haze
G = Gold
WH = Wheat
GP = Graphite
GPH = Graphite Haze
K = Cognac
KH = Cognac Haze
B = Black
(Omit finish code for black baffle option)

Options
BA = Black Baffle

Accessories
(None)

PHOTOMETRICS

Candlepower Distribution

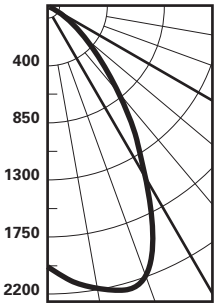

Test No. E428-428
M8605P-737-44600LI
Lamp=M100C
Lumens=8000
Spacing Criteria=1.1
Efficiency=38.5%

Candlepower

Deg.	CD
0	1988
5	2003
15	2217
25	1974
35	1117
45	542
55	191
65	60
75	8
85	0
90	0

Average Luminance

Deg.	CD/SQ M
45	46706
55	20291
65	8651
75	1883
85	0

Cone of Light

Distance to Illuminated Plane	Initial Nadir Footcandles	Beam Diameter
5'6"	66	6'6"
6'6"	47	7'6"
8'0"	31	9'0"
10'0"	20	11'6"
12'0"	14	13'6"
14'0"	10	16'0"

Beam diameter is to 50% of maximum footcandles, rounded to the nearest half-foot.

Footcandle values are initial, apply appropriate light loss factors where necessary.

Cone Color Multiplier
Gold x 0.90

Lamp Wattage Multiplier
70W x 0.625

Zonal Lumen Summary

Zone	Lumens	%Lamp	%Luminaire
0-30	1713	21.4	55.7
0-40	2413	30.2	78.4
0-60	3012	37.6	97.9
0-90	3076	38.5	100.0
90-180	0	0.0	0.0
0-180	3076	38.5	100.0

Coefficient of Utilization

rc	80%				70%			50%		30%		10%		0%
rw	70	50	30	10	50	30	10	50	10	50	10	50	10	0
RCR														
0	46	46	46	46	45	45	45	43	43	41	41	39	39	38
1	44	43	42	41	42	41	40	40	39	39	38	37	37	36
2	41	40	38	37	39	38	36	38	36	37	35	35	34	33
3	39	37	35	33	36	35	33	35	33	34	32	34	32	31
4	37	34	32	31	34	32	30	33	30	32	30	32	29	29
5	35	32	30	28	32	30	28	31	28	30	27	30	27	27
6	33	30	28	26	30	27	26	29	26	28	25	28	25	25
7	31	28	25	24	27	25	24	27	23	27	23	26	23	23
8	30	26	23	22	26	23	22	25	22	25	22	24	21	21
9	28	24	22	20	24	22	20	23	20	23	20	23	20	19
10	26	22	20	18	22	20	18	22	18	22	18	21	18	18

rc=Ceiling reflectance, rw=Wall reflectance, RCR=Room cavity ratio
CU Data Based on 20% Effective Floor Cavity Reflectance.

PHOTOMETRICS

Candlepower Distribution

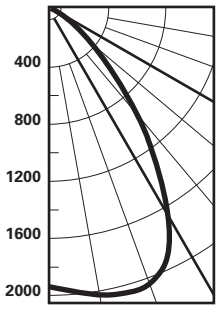

Test No. E428-429

M8605P-737-44600BA

Lamp=M100C
Lumens=8000

Spacing Criteria=1.0
Efficiency=35.0%

Candlepower

Deg.	CD
0	1918
5	1980
15	2154
25	1902
35	1017
45	438
55	143
65	29
75	2
85	0
90	0

Average Luminance

Deg.	CD/SQ M
45	36960
55	14876
65	4094
75	461
85	0

Cone of Light

Distance to Illuminated Plane	Initial Nadir Footcandles	Beam Diameter
5'6"	64	6'0"
6'6"	46	7'6"
8'0"	30	9'0"
10'0"	19	11'0"
12'0"	13	13'6"
14'0"	10	16'0"

Beam diameter is to 50% of maximum footcandles, rounded to the nearest half-foot.

Footcandle values are initial, apply appropriate light loss factors where necessary.

Lamp Wattage Multiplier
70W x 0.625

Zonal Lumen Summary

Zone	Lumens	%Lamp	%Luminaire
0-30	1656	20.7	59.1
0-40	2296	28.7	81.9
0-60	2769	34.6	98.8
0-90	2804	35.0	100.0
90-180	0	0.0	0.0
0-180	2804	35.0	100.0

Coefficient of Utilization

rc	80%				70%			50%		30%		10%		0%
rw	70	50	30	10	50	30	10	50	10	50	10	50	10	0
RCR														
0	42	42	42	42	41	41	41	39	39	37	37	36	36	35
1	40	39	38	37	38	37	37	37	36	35	34	34	33	33
2	38	36	35	34	36	35	33	35	33	34	32	33	31	31
3	36	34	32	31	34	32	31	33	30	32	30	31	29	29
4	34	32	30	29	31	30	28	31	28	30	28	29	27	27
5	33	30	28	26	29	28	26	29	26	28	26	28	25	25
6	31	28	26	24	28	26	24	27	24	27	24	26	24	23
7	29	26	24	22	26	24	22	25	22	25	22	24	22	21
8	28	24	22	21	24	22	21	24	21	23	21	23	20	20
9	26	23	21	19	22	20	19	22	19	22	19	22	19	18
10	25	21	19	18	21	19	18	21	18	21	18	20	18	17

rc=Ceiling reflectance, rw=Wall reflectance, RCR=Room cavity ratio

CU Data Based on 20% Effective Floor Cavity Reflectance.