KALLISTA®

One™ Pulldown Kitchen Faucet

P25200

FEATURES

- *Solid Brass Construction for Durability and Reliability*
- *Utilizes Installation Ring and flexible Inlet Connections for Ease of Installation*
- *One-Piece, Self-Contained Ceramic Disc Valve Allows for Both Volume and Temperature Control*
- *Sprayhead Provides Both Laminar and Spray Functions at the Touch of a Button*
- *'In the Deck' Joystick Valving is Simple in Form but Strong in Function*
- *Balljoint Technology for Ease of Movement*
- *High-Arch Spout Design with 360 Degree Rotation Offers Superior Clearance for a Variety of Sink Activities*
- *2.2 Gallons (8.3 L) Per Minute Flow Rate*
- *Complements the One™ Faucet Collection*

CODES/STANDARDS APPLICABLE

Specified Model Meets or Exceeds the Following:

- *ADA Compliant Lever Handle*

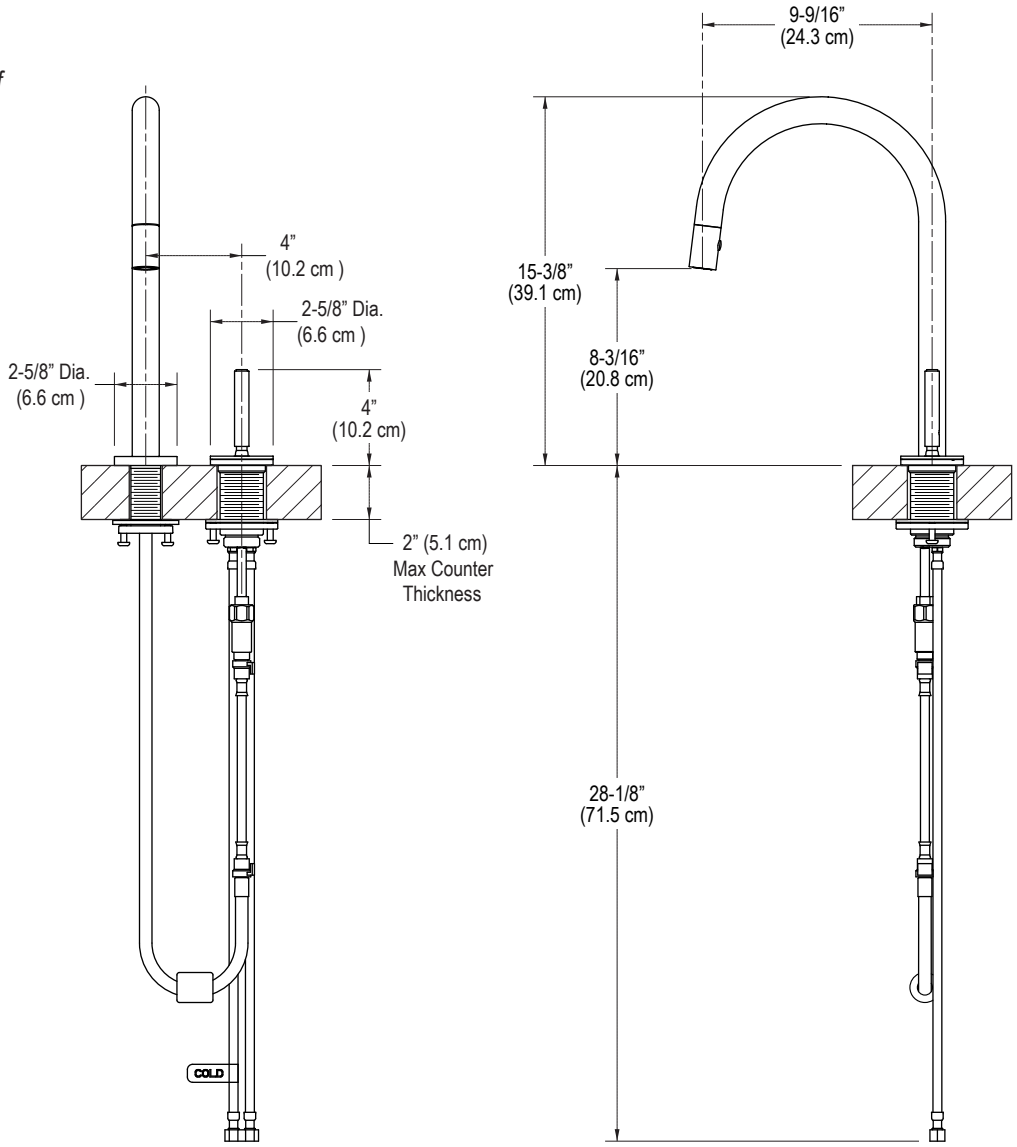

SPECIFIED MODEL				
Model	Description	Finishes		
P25200-00	One™ Pulldown Kitchen Faucet	❑ CP Polished Chrome	❑ AD Nickel Silver	❑ AG Brushed Nickel
Recommended Accessories				
P25215-00	One™ Soap/Lotion Dispenser	❑ CP Polished Chrome	❑ AD Nickel Silver	❑ AG Brushed Nickel
1102407	Kit for Countertops over 2" Thick	❑ NA		

We reserve the right to make revisions without notice in the design of products or in packaging unless this right has specifically been waived at the time the order is accepted.

Questions? Problems? For additional assistance, please contact Kallista's Customer Service Department at 1-888-4KALLISTA (1-888-452-5547) or FAX 1-888-272-3094.