PAPER HOLDER
OPPH19

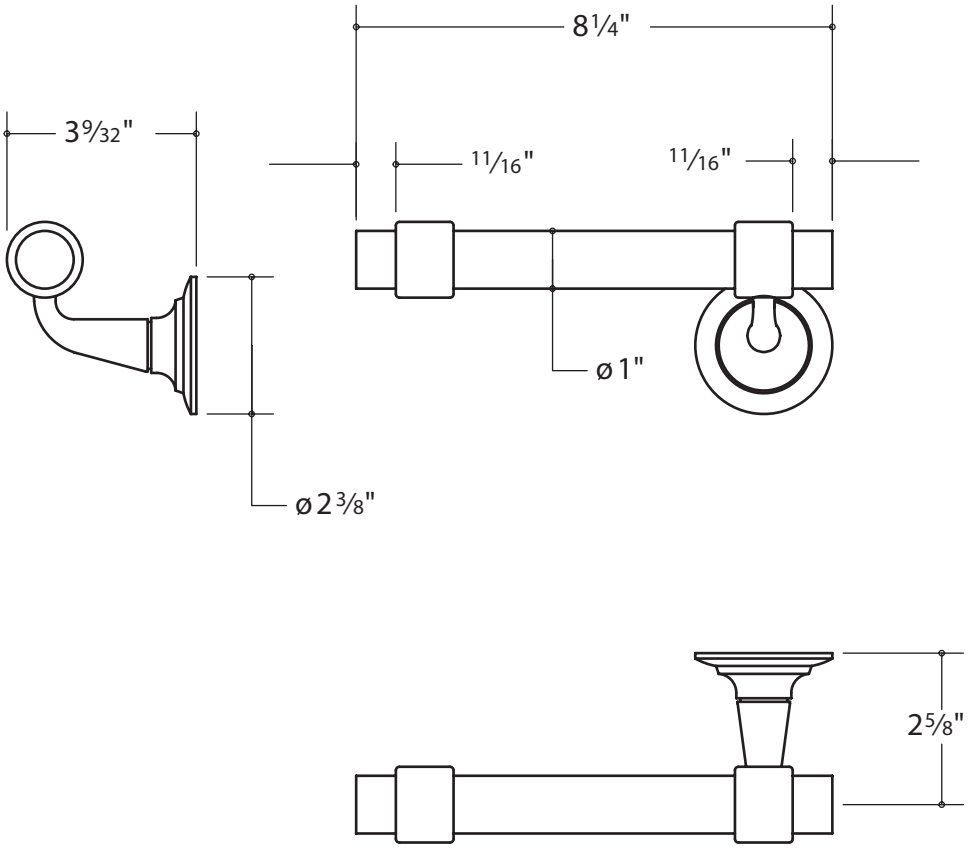

Note:
- Mounting hardware provided.
- Wood blocking is recommended to ensure adequate support.

All dimensions are based on original specifications and are subject to change and variation.
Please consult your Design Associate for current specification.