LAVATORY FAUCET W/CROSS HANDLES
BDLS01

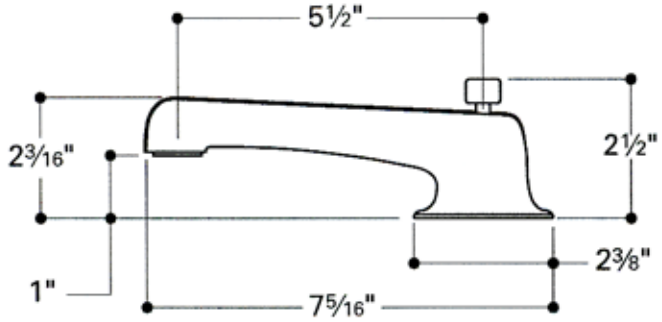

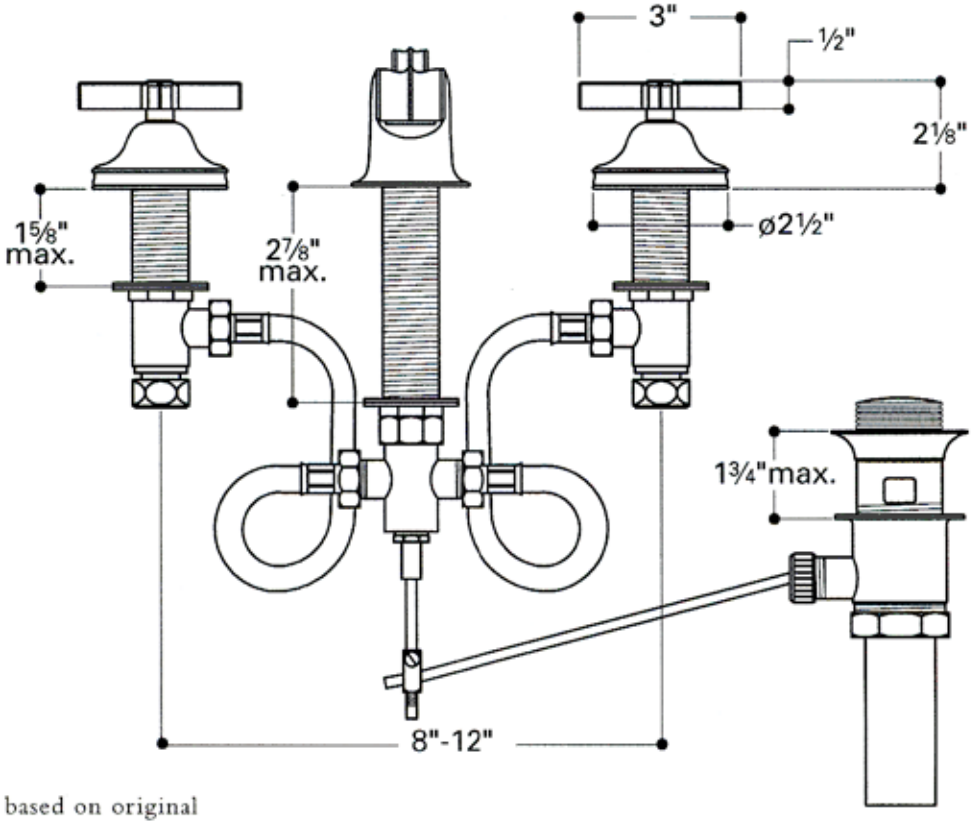

All dimensions are based on original specifications and are subject to change and variation.
Please consult your Design Associate for current specification.

Note:
- Drilling hole size: 1¼"