DWG# C-0183

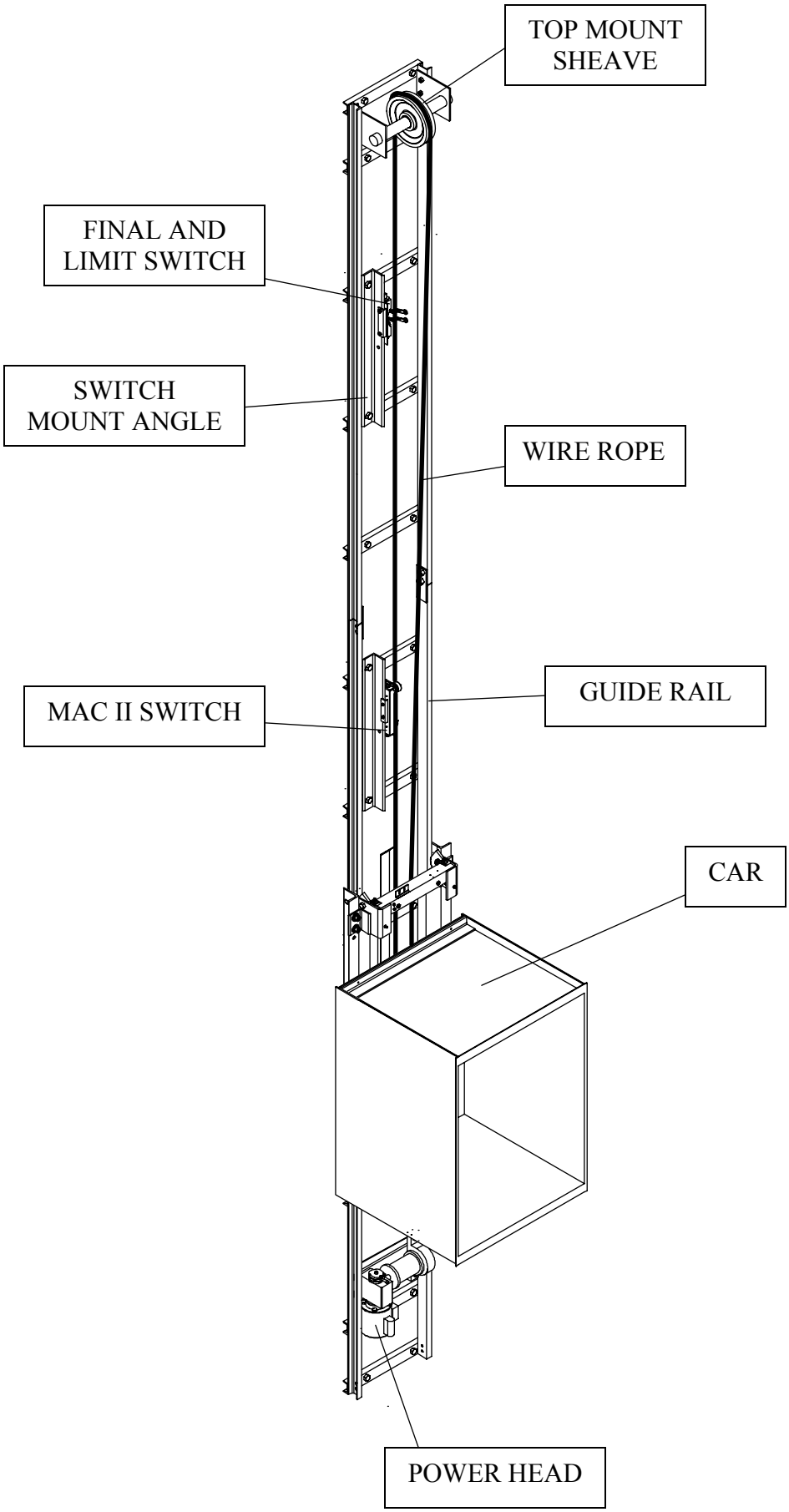

WAUPACA ELEVATOR COMPANY, INC.
Specify the Specialists®