ELKAY®
SPECIFICATIONS

Anti-Scald Universal Thermostatic Mixing Valve
Model LK723

GENERAL

LK723 Anti-scald thermostatic universal mixing valve with forged bronze body, 3/8" (10mm) compression type inlet and outlet connections. Contains a four port adapter to allow use for both touchless and two handle sink operations. Comes with internal check valves on inlets and mixed temperature range of 80-120°F. Ship. Wt. 1-1/2 lbs (0.7Kg).

ASSE Certified under ASSE 1016.

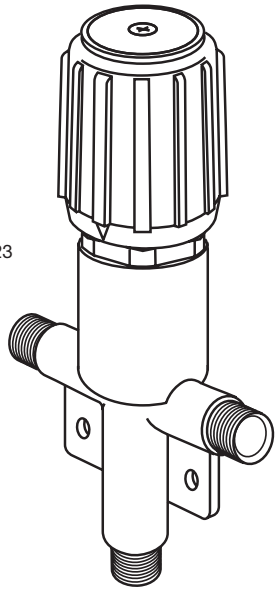

Model LK723

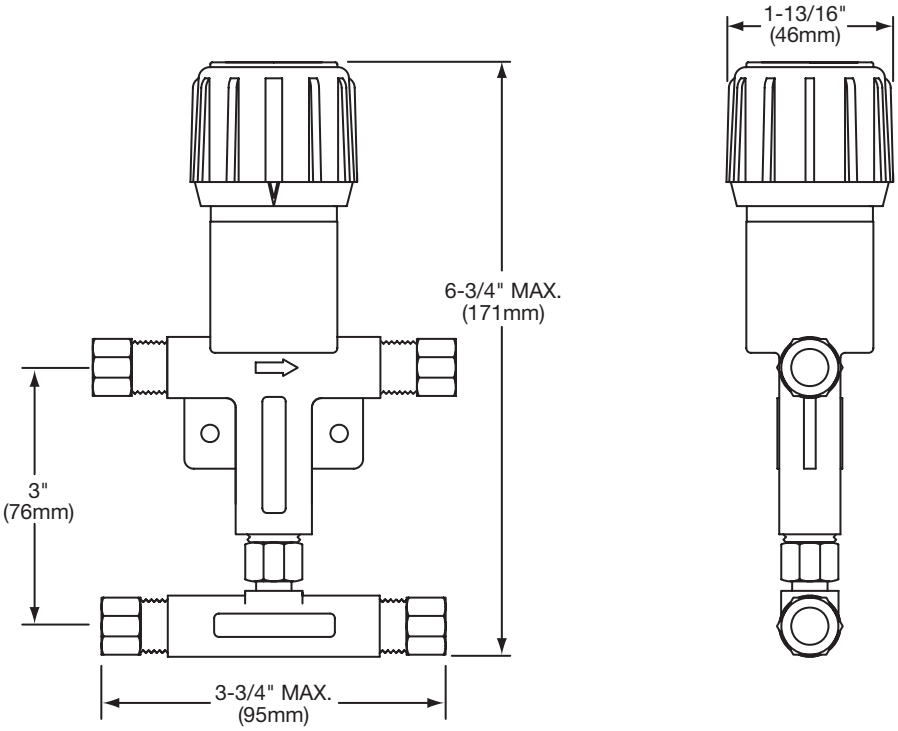

In keeping with our policy of continuing product improvement, Elkay reserves the right to change product specifications without notice. Please visit elkayusa.com for most current version of Elkay product specification sheets.

This specification describes an Elkay product with design, quality and functional benefits to the user. When making a comparison of other producers' offerings, be certain these features are not overlooked.

Elkay
elkayusa.com

2222 Camden Court
Oak Brook, IL 60523

Printed in U.S.A.
©2008 Elkay