Trim, Limbo™ 4-Hole Tub Filler
06113XX0

Available in Chrome (00), Oil Rub Bronze (62), Brushed Nickel (82)

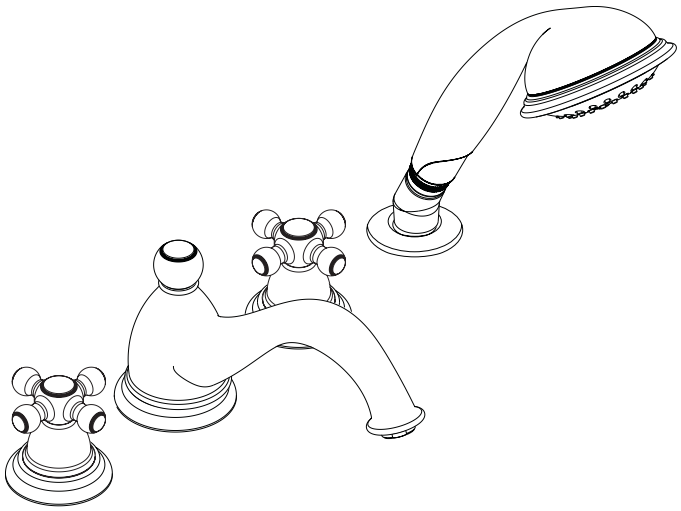

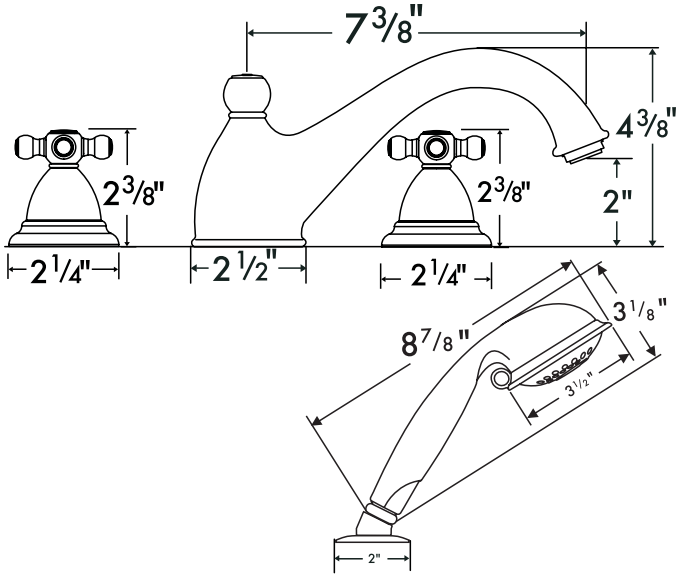

Product Specification

Cross handles
Solid brass
Retroaktiv handshower
- two spray modes - normal and massage
- flow rate 2.5 gpm
- Rubit™ cleaning system

Protection against back siphonage provided by check valve
Spout with integral diverter
Requires rough valve 06646000

hansgrohe