SHOW HOUSE by MOEN

Replacement Parts

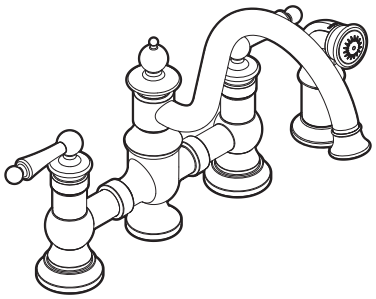

Waterhill™

Two-Handle Kitchen Bridge w/Spray

Models:	S713	Chrome
	S713CSL	Classic Stainless
	S713SL	Stainless
	S713WR	Wrought Iron
	S713NL	Nickel
	S713ORB	Oil Rubbed Bronze

Order by Part Number

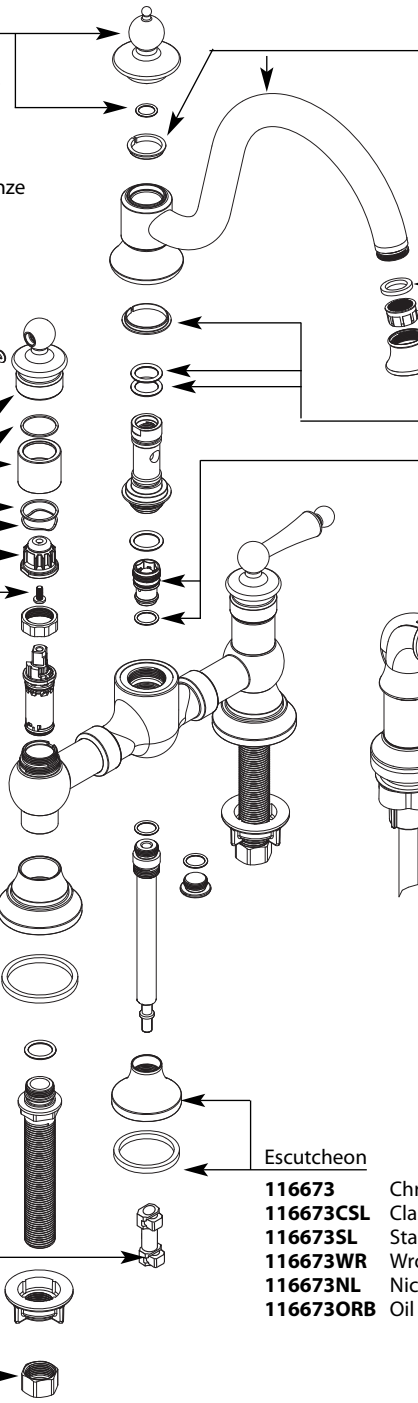

Spout Cap

116640	Chrome
116640CSL	Classic Stainless
116640SL	Stainless
116640WR	Wrought Iron
116640NL	Nickel
116640ORB	Oil Rubbed Bronze

Spout Kit

116641	Chrome
116641CSL	Classic Stainless
116641SL	Stainless
116641WR	Wrought Iron
116641NL	Nickel
116641ORB	Oil Rubbed Bronze

Aerator Kit

116634	Chrome
116634CSL	Classic Stainless
116634BN	Stainless
116634WR	Wrought Iron
116634NL	Nickel
116634ORB	Oil Rubbed Bronze

Handle Insert

116628	Chrome
116628CSL	Classic Stainless
116628BN	Stainless
116628WR	Wrought Iron
116628NL	Nickel
116628ORB	Oil Rubbed Bronze

Diverter

14960

Handle Hub Kit, Hot

116670	Chrome
116670CSL	Classic Stainless
116670SL	Stainless
116670WR	Wrought Iron
116670NL	Nickel
116670ORB	Oil Rubbed Bronze

Handle Hardware Kit, Cold

116671	Chrome
116671CSL	Classic Stainless
116671SL	Stainless
116671WR	Wrought Iron
116671NL	Nickel
116671ORB	Oil Rubbed Bronze

FOR MODELS WITH HYDROLOCK® CONNECTION

Side Spray, Hose, and Hose Guide

136104	Chrome
136104CSL	Classic Stainless
136104SL	Stainless
136104WR	Wrought Iron
136104NL	Nickel
136104ORB	Oil Rubbed Bronze

FOR MODELS WITH THREADED CONNECTION

Side Spray, Hose, and Hose Guide

141000	Chrome
141000SL	Stainless
141000WR	Wrought Iron
141000NL	Nickel
141000ORB	Oil Rubbed Bronze

Handle Escutcheon

116672	Chrome
116672CSL	Classic Stainless
116672SL	Stainless
116672WR	Wrought Iron
116672NL	Nickel
116672ORB	Oil Rubbed Bronze

Escutcheon

116673	Chrome
116673CSL	Classic Stainless
116673SL	Stainless
116673WR	Wrought Iron
116673NL	Nickel
116673ORB	Oil Rubbed Bronze

Hydrolock® Connection

136102

Mounting Hardware

13678

TO ORDER PARTS CALL: 1-800-BUY-MOEN
www.moen.com