SHOW HOUSE by MOEN

Replacement Parts

Divine™

Single Handle Hi-Arc Pull Down Kitchen Faucet

Models:		
	S758	Chrome
	S758CSL	Classic Stainless
	S758SL	Stainless

Order by Part Number

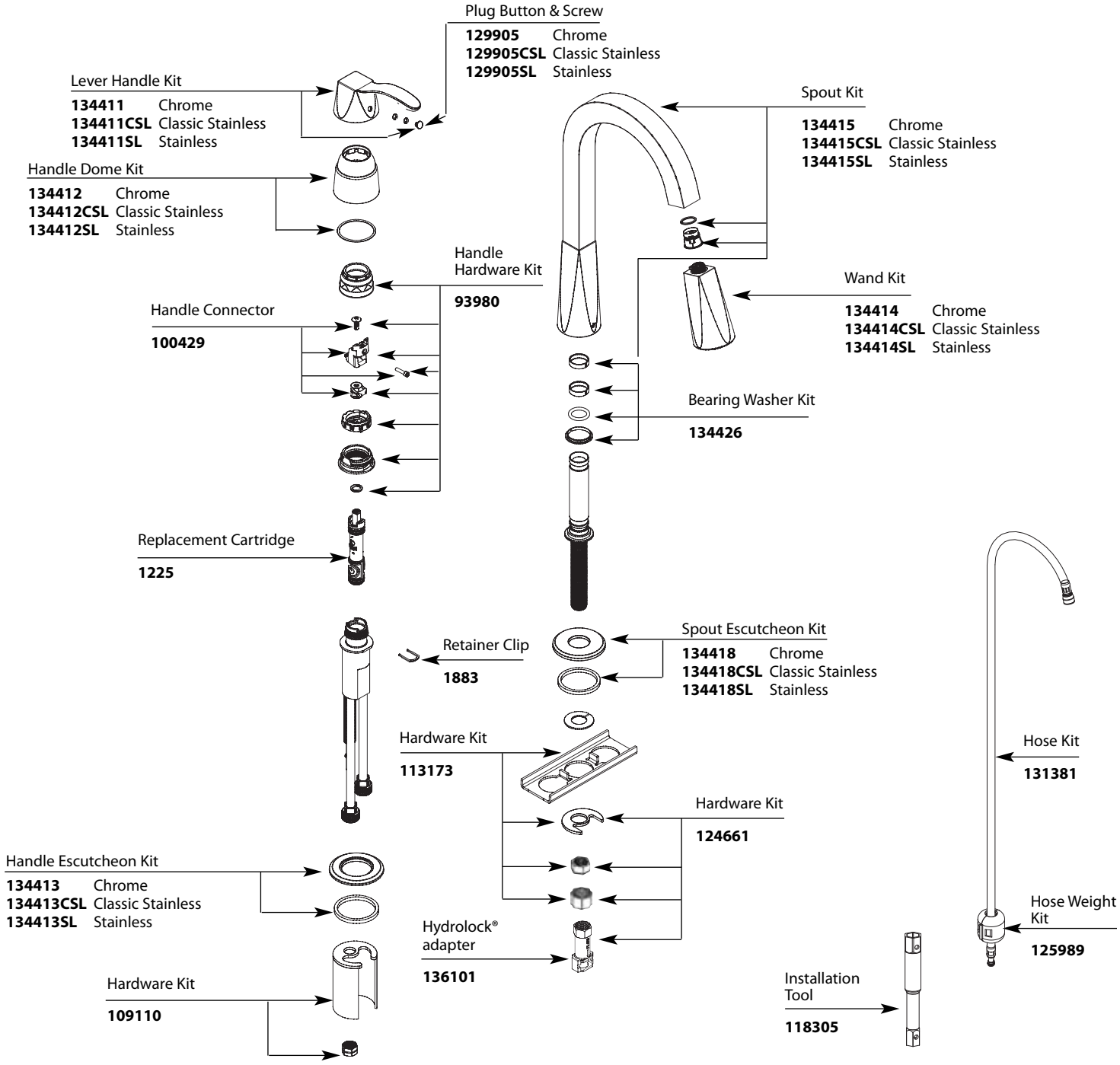

TO ORDER PARTS CALL: 1-800-BUY-MOEN
www.moen.com