SHOW HOUSE by MOEN

Replacement Parts

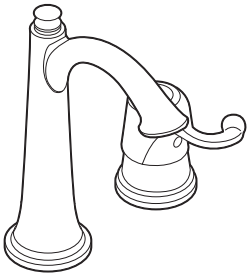

Savvy™

Single Handle Prep Bar Faucet

Models:		
	S691	Chrome
	S691CSL	Classic Stainless
	S691BB	Brushed Bronze
	S691SL	Stainless

Order by Part Number

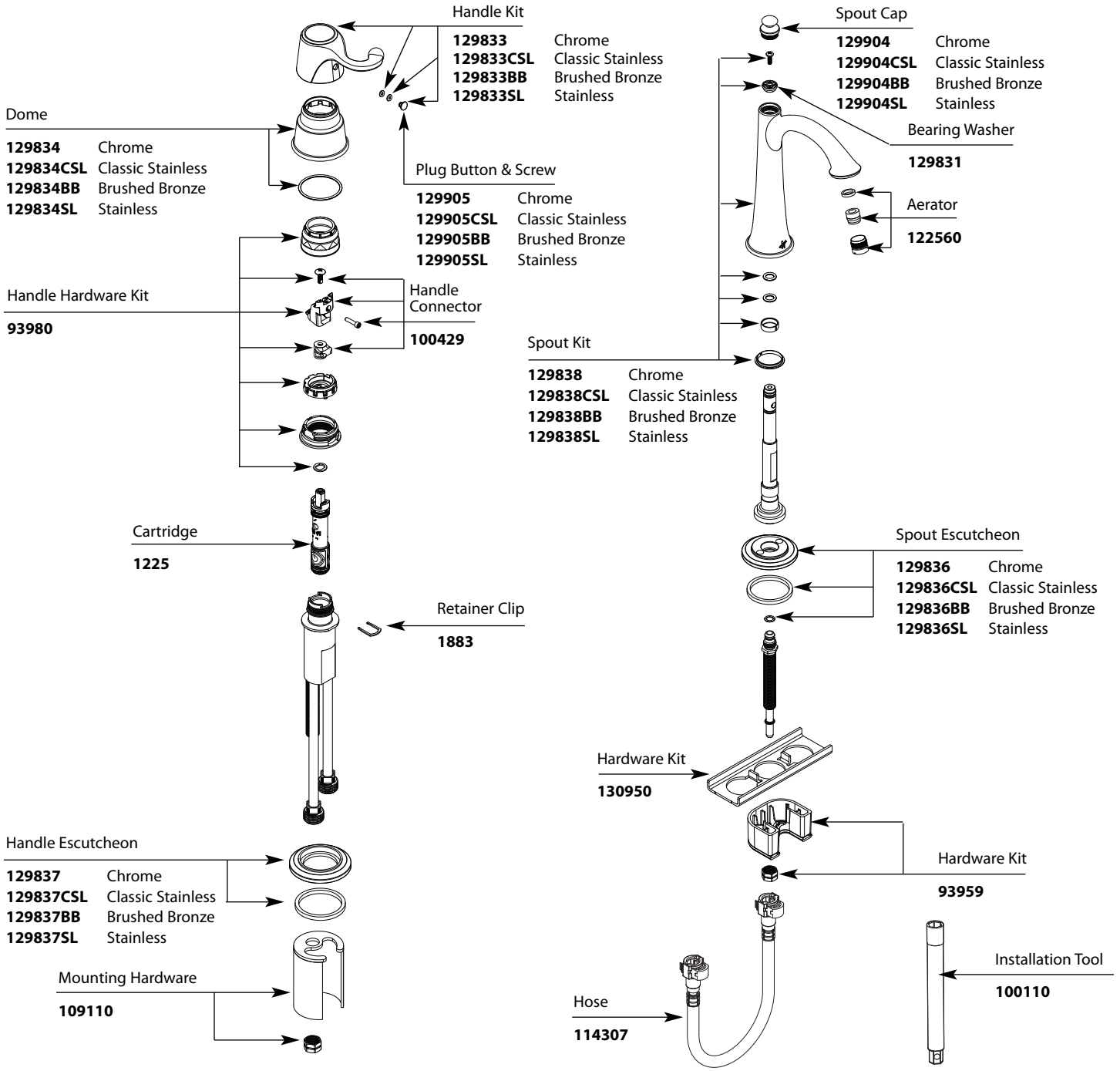

TO ORDER PARTS CALL: 1-800-BUY-MOEN
www.moen.com