Atrio 34 090

Exposed Thermostatic Tub Filler

Description

-DISCONTINUED PRODUCT-

8 3/4" spout
Trio spoke handles
Paraffin cartridge
Temperature control with safety stop
Aquadimmer diverter/volume control
1/2" hand shower hose connection
Includes vacuum breaker
1/2" male threaded wall unions,
adjustable centers 5" to 7"

Flow Rate

5.3 gpm at 45 psi

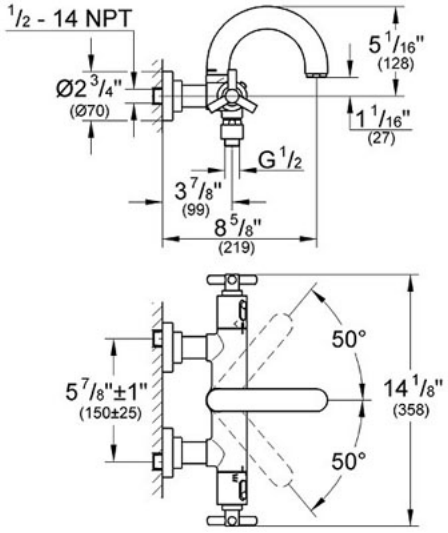

Code Compliance

* ASME/ANSI A112.18.1M
* ASSE Standard 1016

Finish Options

34 090 OOO Chrome

GROHE AMERICA, INC 241 COVINGTON DRIVE, BLOOMINGDALE, IL 60108 . 630-582-7711.FAX:630-582-7722